Micro Mechanical Valve
VM1000 Series

RoHS

Miniature stucture requires little mounting space.

Built-in hose nipple connection.

Piping options:
Side piping, Bottom piping

Over Travel after actuation (mechanical operated types)

Standard Specifications

Valve type			N.C. poppet		
Number of ports			2 or 3		
Piping			Side or bottom ported		
Fluid			Air		
Operating pressure			0 to 0.8 MPa		
Ambient and fluid temperature			–5 to 60°C (No freezing)		
Flow rate characteristics			C[dm³/(s·bar)]	b	Cv
	Side ported	1(P)→2(A)	0.2	0.15	0.05
		2(A)→3(R)	0.2	0.15	0.05
	Bottom ported	1(P)→2(A)	0.2	0.25	0.05
		2(A)→3(R)	0.2	0.15	0.05
Lubrication			Not required (Use turbine oil Class 1 ISO VG32, if lubricated.)		
Fitting			With hose nipple		

Semi-standard Specification

Total travel (T.T.)	2.5 mm (Basic)
• T.T. 2.5 mm is available for basic type only.	

Model

	Actuator	Piping	Number of ports	Applicable tubing T0425	Applicable tubing TU0425/T0403	Note	Weight (g)
Mechanical operation	Basic	Side ported	3 port	VM1000-4N-00	VM1000-4NU-00	—	6
			2 port	VM1100-4N-00	VM1100-4NU-00	—	
		Bottom ported	3 port	VM1010-4N-00	VM1010-4NU-00	—	
			2 port	VM1110-4N-00	VM1110-4NU-00	—	
	Roller lever	Side ported	3 port	VM1000-4N-01	VM1000-4NU-01	—	11
			2 port	VM1100-4N-01	VM1100-4NU-01	—	
		Bottom ported	3 port	VM1010-4N-01	VM1010-4NU-01	—	
			2 port	VM1110-4N-01	VM1110-4NU-01	—	
	One way roller lever	Side ported	3 port	VM1000-4N-02	VM1000-4NU-02	—	12
			2 port	VM1100-4N-02	VM1100-4NU-02	—	
		Bottom ported	3 port	VM1010-4N-02	VM1010-4NU-02	—	
			2 port	VM1110-4N-02	VM1110-4NU-02	—	
Manual operation	Toggle lever	Side ported	3 port	VM1000-4N-08	VM1000-4NU-08	—	20
			2 port	VM1100-4N-08	VM1100-4NU-08	—	
		Bottom ported	3 port	VM1010-4N-08	VM1010-4NU-08	—	
			2 port	VM1110-4N-08	VM1110-4NU-08	—	
	Push button	Side ported	3 port	VM1000-4N-32R	VM1000-4NU-32R	Red	31
			2 port	VM1100-4N-32R	VM1100-4NU-32R	Red	
		Bottom ported	3 port	VM1010-4N-32R	VM1010-4NU-32R	Red	
			2 port	VM1110-4N-32R	VM1110-4NU-32R	Red	
		Side ported	3 port	VM1000-4N-32B	VM1000-4NU-32B	Black	
			2 port	VM1100-4N-32B	VM1100-4NU-32B	Black	
		Bottom ported	3 port	VM1010-4N-32B	VM1010-4NU-32B	Black	
			2 port	VM1110-4N-32B	VM1110-4NU-32B	Black	
		Side ported	3 port	VM1000-4N-32G	VM1000-4NU-32G	Green	
			2 port	VM1100-4N-32G	VM1100-4NU-32G	Green	
		Bottom ported	3 port	VM1010-4N-32G	VM1010-4NU-32G	Green	
			2 port	VM1110-4N-32G	VM1110-4NU-32G	Green	

Note) To replace the push button and push button cover alone, refer to page 1656.
Other parts and actuator cannot be replaced.

SMC

Courtesy of Steven Engineering, Inc - (800) 258-9200 - sales@steveneng.com - www.stevenengineering.com

How to Order

VM1 0 0 0 – 4N – 00 □

Number of ports

0	3 port
1	2 port

Piping

0	Side ported
1	Bottom ported

Total travel/Basic (T.T.)

0	4.8 mm
1	2.5 mm (Option)*

* Basic only.

Applicable tubing (Material/Size)

4N	Nylon ø4/2.5 (T0425)
4NU	Nylon ø4/3 (T0403)
	Soft Nylon ø4/2.5 (TS0425)
	Polyurethane ø4/2.5 (TU0425)

Actuator type[*1]

00	Basic
01	Roller lever
02	One way roller lever
08	Toggle lever
32	Push button

Color of push button[*1]

R	Red
G	Green
B	Black

*1 **For details on the color variations for the actuator with push button, refer to Model on page 1582.**

Construction

Side ported/Non-actuated

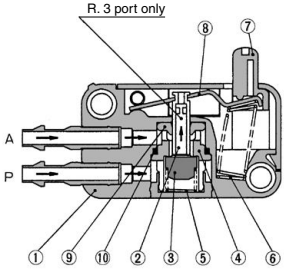

Side ported/Actuated

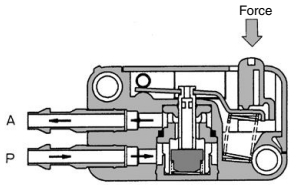

Bottom ported/Non-actuated

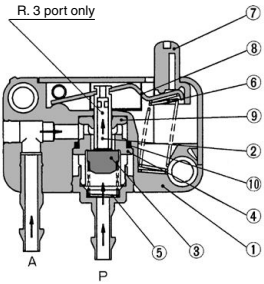

Bottom ported/Actuated

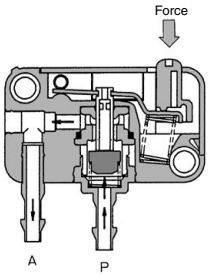

Component Parts

No.	Description	Material	Note
1	**Body**	PBT	
2	**Valve**	POM	
3	**Valve**	NBR	
4	**Retainer**	POM	
5	**Valve return spring**	Stainless steel	

No.	Description	Material	Note
6	**Lever return spring**	Stainless steel	
7	**Plunger**	POM	T.T. = 2.5 mm only, w/threads
8	**Lever**	Stainless steel	
9	**Packing**	NBR	
10	**O-ring**	NBR	

Courtesy of Steven Engineering, Inc - (800) 258-9200 - sales@steveneng.com - www.stevenengineering.com

VM1000 Series/Side Ported

Basic

VM1000-4N-00
VM1000-4NU-00
VM1100-4N-00
VM1100-4NU-00

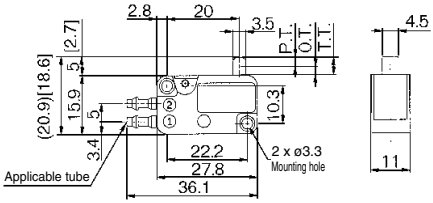

[ ]: T.T. = 2.5 mm

Symbol/2 port

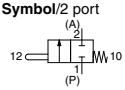

3 port

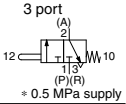

∗ 0.5 MPa supply

		Applicable tubing	
		T0425	TU0425, T0403, TS0425
Side ported	3 port	**VM1000-4N-00**	**VM1000-4NU-00**
	2 port	**VM1100-4N-00**	**VM1100-4NU-00**
F.O.F. ∗		6 N	
P.T.		2.5mm[2mm]	
O.T.		2.3mm[0.5mm]	
T.T.		4.8mm[2.5mm]	

Roller lever

VM1000-4N-01
VM1000-4NU-01
VM1100-4N-01
VM1100-4NU-01

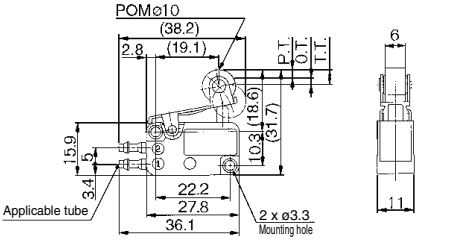

Symbol/2 port

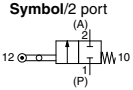

3 port

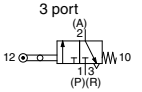

∗ 0.5 MPa supply

		Applicable tubing	
		T0425	TU0425, T0403, TS0425
Side ported	3 port	**VM1000-4N-01**	**VM1000-4NU-01**
	2 port	**VM1100-4N-01**	**VM1100-4NU-01**
F.O.F. ∗		6 N	
P.T.		2.5 mm	
O.T.		2.0 mm	
T.T.		4.5 mm	

One way roller lever

VM1000-4N-02
VM1000-4NU-02
VM1100-4N-02
VM1100-4NU-02

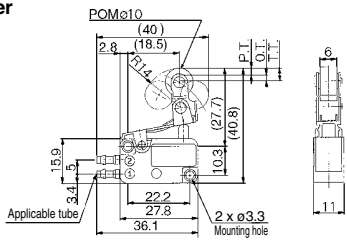

Symbol/2 port

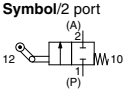

3 port

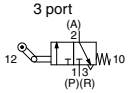

∗ 0.5 MPa supply

		Applicable tubing	
		T0425	TU0425, T0403, TS0425
Side ported	3 port	**VM1000-4N-02**	**VM1000-4NU-02**
	2 port	**VM1100-4N-02**	**VM1100-4NU-02**
F.O.F. ∗		6 N	
P.T.		2.5 mm	
O.T.		2.0 mm	
T.T.		4.5 mm	

Toggle lever

VM1000-4N-08
VM1000-4NU-08
VM1100-4N-08
VM1100-4NU-08

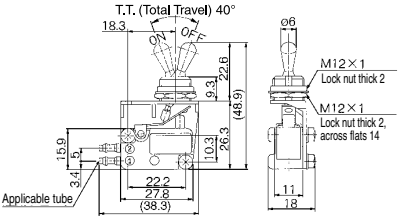

Panel mounting hole

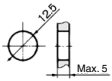

Symbol/2 port

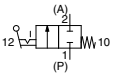

3 port

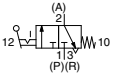

∗ 0.5 MPa supply

		Applicable tubing	
		T0425	TU0425, T0403, TS0425
Side ported	3 port	**VM1000-4N-08**	**VM1000-4NU-08**
	2 port	**VM1100-4N-08**	**VM1100-4NU-08**
F.O.F. ∗		4N	
P.T.		40°	

Push button

VM1000-4N-32
VM1000-4NU-32
VM1100-4N-32
VM1100-4NU-32

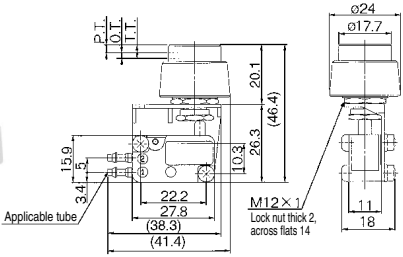

Panel mounting hole

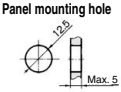

Symbol/2 port

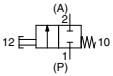

3 port

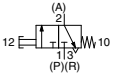

∗ 0.5 MPa supply

		Applicable tubing	
		T0425	TU0425, T0403, TS0425
Side ported	3 port	**VM1000-4N-32**	**VM1000-4NU-32**
	2 port	**VM1100-4N-32**	**VM1100-4NU-32**
F.O.F. ∗		6 N	
P.T.		2.5 mm	
O.T.		2.0 mm	
T.T.		4.5 mm	

SMC

Courtesy of Steven Engineering, Inc - (800) 258-9200 - sales@steveneng.com - www.stevenengineering.com

VM1000 Series/Bottom Ported

Basic
VM1010-4N-00
VM1010-4NU-00
VM1110-4N-00
VM1110-4NU-00

[ ]: T.T. = 2.5 mm

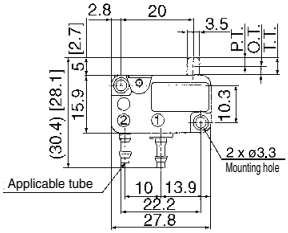

Symbol/2 port 3 port

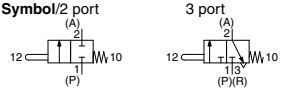

∗ 0.5 MPa supply

		Applicable tubing	
		T0425	TU0425, T0403, TS0425
Bottom ported	3 port	**VM1010-4N-00**	**VM1010-4NU-00**
	2 port	**VM1110-4N-00**	**VM1110-4NU-00**
F.O.F. ∗		6 N	
P.T.		2.5mm	
O.T.		2.3mm[0.5mm]	
T.T.		4.8mm[2.5mm]	

Roller lever
VM1010-4N-01
VM1010-4NU-01
VM1110-4N-01
VM1110-4NU-01

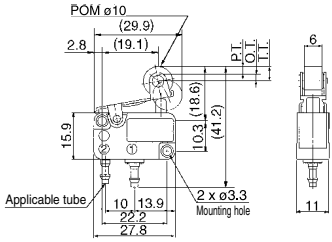

Symbol/2 port 3 port

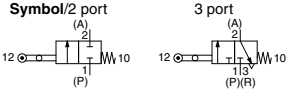

∗ 0.5 MPa supply

		Applicable tubing	
		T0425	TU0425, T0403, TS0425
Bottom ported	3 port	**VM1010-4N-01**	**VM1010-4NU-01**
	2 port	**VM1110-4N-01**	**VM1110-4NU-01**
F.O.F. ∗		6 N	
P.T.		2.5 mm	
O.T.		2.0 mm	
T.T.		4.5 mm	

One way roller lever
VM1010-4N-02
VM1010-4NU-02
VM1110-4N-02
VM1110-4NU-02

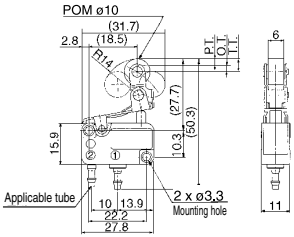

Symbol/2 port 3 port

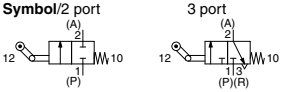

∗ 0.5 MPa supply

		Applicable tubing	
		T0425	TU0425, T0403, TS0425
Bottom ported	3 port	**VM1010-4N-02**	**VM1010-4NU-02**
	2 port	**VM1110-4N-02**	**VM1110-4NU-02**
F.O.F. ∗		6 N	
P.T.		2.5 mm	
O.T.		2.0 mm	
T.T.		4.5 mm	

Toggle lever
M1010-4N-08
VM1010-4NU-08
VM1110-4N-08
VM1110-4NU-08

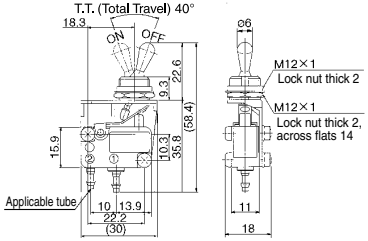

Panel mounting hole

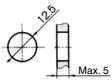

Symbol/2 port 3 port

∗ 0.5 MPa supply

		Applicable tubing	
		T0425	TU0425, T0403, TS0425
Bottom ported	3 port	**VM1010-4N-08**	**VM1010-4NU-08**
	2 port	**VM1110-4N-08**	**VM1110-4NU-08**
F.O.F. ∗		4N	
P.T.		40°	

Push button
VM1010-4N-32
VM1010-4NU-32
VM1110-4N-32
VM1110-4NU-32

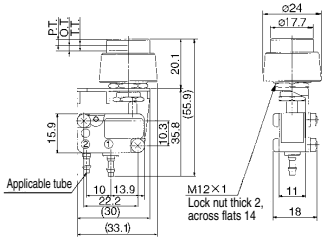

Panel mounting hole

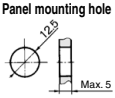

Symbol/2 port 3 port

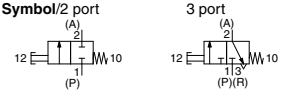

∗ 0.5 MPa supply

		Applicable tubing	
		T0425	TU0425, T0403, TS0425
Bottom ported	3 port	**VM1010-4N-32**	**VM1010-4NU-32**
	2 port	**VM1110-4N-32**	**VM1110-4NU-32**
F.O.F. ∗		6 N	
P.T.		2.5 mm	
O.T.		2.0 mm	
T.T.		4.5 mm	

Courtesy of Steven Engineering, Inc - (800) 258-9200 - sales@steveneng.com - www.stevenengineering.com

2/3 Port Mechanical Valve

VM100/200 Series

RoHS

Lightweight

VM100 **60 g** * (Current model: 95 g)

VM200 **90 g** * (Current model: 111 g)

* Side ported, basic type

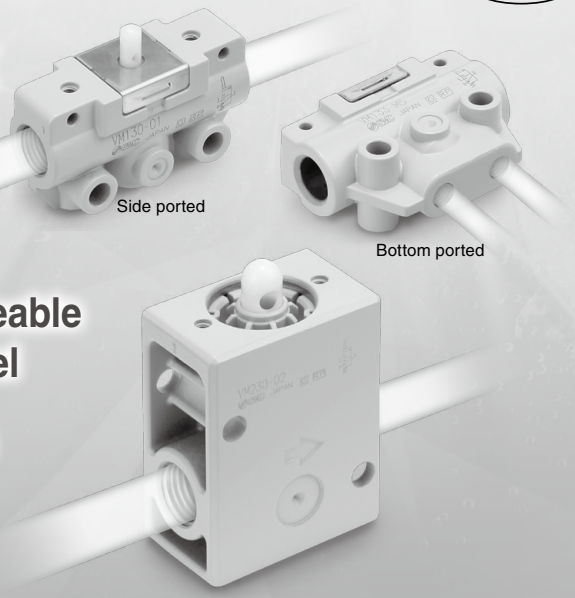

Mounting interchangeable with the current model

Available in vacuum applications (VM100)

–100 kPa to 1 MPa

(VM200: 0 to 1 MPa)

Mounting

Bracket mounting and bottom mounting are newly added.

Bracket mounting

Bottom mounting (Side ported only)

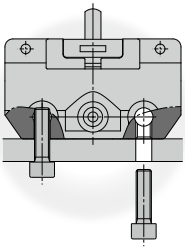

Side mounting

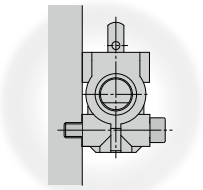

Panel mounting

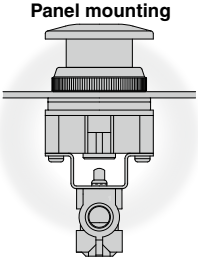

Piping direction

Side ported

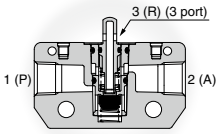

Bottom ported (VM100 only)

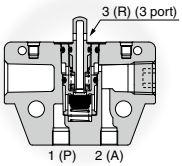

With miniature indicator*

Possible to check if air is output to the secondary port.

* VM100/Bottom ported only

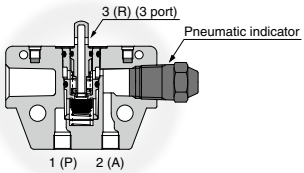

SMC

Courtesy of Steven Engineering, Inc - (800) 258-9200 - sales@steveneng.com - www.stevenengineering.com

Actuator Variations

∗ It is possible to change the actuator assembly and mount to basic type.

Mechanical Operation

Roller lever

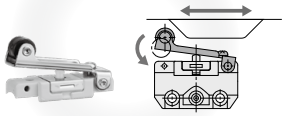

One way roller lever

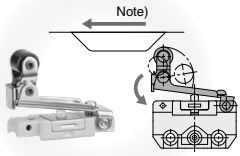

Note) If operated (by cam or dog) in the opposite direction, the valve will not be opened.

Straight plunger∗

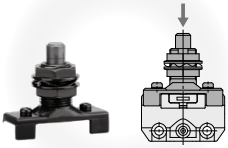

Roller plunger∗

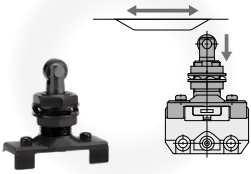

Cross roller plunger∗

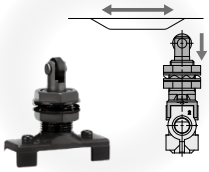

Manual Operation

Toggle lever∗

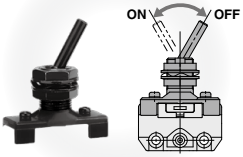

Push button (Mushroom)∗

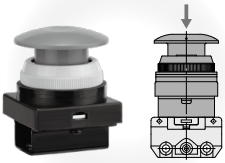

Color: Red, **Black**, Green, Yellow

Push button (Extended)∗

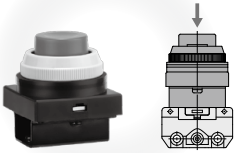

Color: Red, **Black**, Green, Yellow

Push button (Flush)∗

Color: Red, **Black**, Green, Yellow

Twist selector (2 position)∗

Color: Red, **Black**, Green, Yellow

Key selector (2 position)

Twist selector (3 position)

Color: Red, **Black**, Green, Yellow

Foot pedal (VM200 only)

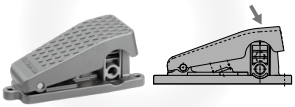

4 colors available for buttons

Push button (Flush) is provided with a set of 4 colors.

Courtesy of Steven Engineering, Inc - (800) 258-9200 - sales@steveneng.com - www.stevenengineering.com

2/3 Port Mechanical Valve
VM100 Series

RoHS

- **Compact size**
- **Piping options:**
  Side ported, Bottom ported
- **Possible to choose mounting method with side ported:**
  Side mounting, bottom mounting using screws, or mounting with special bracket
- **A variety of actuator types**

Specifications

Piping		Side ported		Bottom ported	
Fluid		Air			
Operating pressure range		–100 kPa to 1 MPa			
Ambient and fluid temperature		–5 to 60°C (No freezing)			
Flow rate characteristics		1 (P) ⇒ 2 (A)	2 (A) ⇒ 3 (R)	1 (P) ⇒ 2 (A)	2 (A) ⇒ 3 (R)
	C [dm³/(s·bar)]	0.6	0.5	0.5	0.45
	b	0.2	0.15	0.2	0.15
	Cv	0.11	0.1	0.11	0.1
Lubrication Note 1)		Not required			
Port size		1/8 (Rc, NPT, G)		M5	
Weight (Basic)		60 g		67 g	
Bracket part number Note 2)		VM1-B		—	

Note 1) Use turbine oil Class 1 ISO VG32, if lubricated.
Note 2) The bracket can only be used for side mounting of side ported type.

Model

	Piping direction		Side ported				Bottom ported		Actuator	
	Body option		Standard		With bottom mounting thread		—		Actuator part number	Additional weight for actuator
	Number of ports		**2 port**	**3 port**	**2 port**	**3 port**	**2 port**	**3 port**		
Mechanical operation	Basic		VM120-01-00A	VM130-01-00A	VM120U-01-00A	VM130U-01-00A	VM122-M5-00A	VM132-M5-00A	—	—
			VM121-01-00A	VM131-01-00A	VM121U-01-00A	VM131U-01-00A	VM123-M5-00A	VM133-M5-00A		
	Roller lever	Polyacetal roller	VM121-01-01A	VM131-01-01A	VM121U-01-01A	VM131U-01-01A	VM123-M5-01A	VM133-M5-01A	—	11 g
		Hard steel roller	VM121-01-01SA	VM131-01-01SA	VM121U-01-01SA	VM131U-01-01SA	VM123-M5-01SA	VM133-M5-01SA		16 g
	One way roller lever	Polyacetal roller	VM121-01-02A	VM131-01-02A	VM121U-01-02A	VM131U-01-02A	VM123-M5-02A	VM133-M5-02A	—	15 g
		Hard steel roller	VM121-01-02SA	VM131-01-02SA	VM121U-01-02SA	VM131U-01-02SA	VM123-M5-02SA	VM133-M5-02SA		20 g
	Straight plunger		VM120-01-05A	VM130-01-05A	VM120U-01-05A	VM130U-01-05A	VM122-M5-05A	VM132-M5-05A	VM-05B	43 g
	Roller plunger	Polyacetal roller	VM120-01-06A	VM130-01-06A	VM120U-01-06A	VM130U-01-06A	VM122-M5-06A	VM132-M5-06A	VM-06B	43 g
		Hard steel roller	VM120-01-06SA	VM130-01-06SA	VM120U-01-06SA	VM130U-01-06SA	VM122-M5-06SA	VM132-M5-06SA	VM-06BS	45 g
	Cross roller plunger	Polyacetal roller	VM120-01-07A	VM130-01-07A	VM120U-01-07A	VM130U-01-07A	VM122-M5-07A	VM132-M5-07A	VM-07B	43 g
		Hard steel roller	VM120-01-07SA	VM130-01-07SA	VM120U-01-07SA	VM130U-01-07SA	VM122-M5-07SA	VM132-M5-07SA	VM-07BS	45 g
Manual operation	Toggle lever		VM120-01-08A	VM130-01-08A	VM120U-01-08A	VM130U-01-08A	VM122-M5-08A	VM132-M5-08A	VM-08B	41 g
	Push button (Mushroom)	Red	VM120-01-30RA	VM130-01-30RA	VM120U-01-30RA	VM130U-01-30RA	VM122-M5-30RA	VM132-M5-30RA	VM-30AR	58 g
		Black	VM120-01-30BA	VM130-01-30BA	VM120U-01-30BA	VM130U-01-30BA	VM122-M5-30BA	VM132-M5-30BA	VM-30AB	
		Green	VM120-01-30GA	VM130-01-30GA	VM120U-01-30GA	VM130U-01-30GA	VM122-M5-30GA	VM132-M5-30GA	VM-30AG	
		Yellow	VM120-01-30YA	VM130-01-30YA	VM120U-01-30YA	VM130U-01-30YA	VM122-M5-30YA	VM132-M5-30YA	VM-30AY	
	Push button (Extended)	Red	VM120-01-32RA	VM130-01-32RA	VM120U-01-32RA	VM130U-01-32RA	VM122-M5-32RA	VM132-M5-32RA	VM-32AR	52 g
		Black	VM120-01-32BA	VM130-01-32BA	VM120U-01-32BA	VM130U-01-32BA	VM122-M5-32BA	VM132-M5-32BA	VM-32AB	
		Green	VM120-01-32GA	VM130-01-32GA	VM120U-01-32GA	VM130U-01-32GA	VM122-M5-32GA	VM132-M5-32GA	VM-32AG	
		Yellow	VM120-01-32YA	VM130-01-32YA	VM120U-01-32YA	VM130U-01-32YA	VM122-M5-32YA	VM132-M5-32YA	VM-32AY	
	Push button (Flush)	With a set of red, black, green, yellow	VM120-01-33A	VM130-01-33A	VM120U-01-33A	VM130U-01-33A	VM122-M5-33A	VM132-M5-33A	VM-33A	50 g
	Twist selector (2 position)	Red	VM120-01-34RA	VM130-01-34RA	VM120U-01-34RA	VM130U-01-34RA	VM122-M5-34RA	VM132-M5-34RA	VM-34AR	56 g
		Black	VM120-01-34BA	VM130-01-34BA	VM120U-01-34BA	VM130U-01-34BA	VM122-M5-34BA	VM132-M5-34BA	VM-34AB	
		Green	VM120-01-34GA	VM130-01-34GA	VM120U-01-34GA	VM130U-01-34GA	VM122-M5-34GA	VM132-M5-34GA	VM-34AG	
		Yellow	VM120-01-34YA	VM130-01-34YA	VM120U-01-34YA	VM130U-01-34YA	VM122-M5-34YA	VM132-M5-34YA	VM-34AY	
	Key selector (2 position)		VM120-01-36A	VM130-01-36A	VM120U-01-36A	VM130U-01-36A	VM122-M5-36A	VM132-M5-36A	VM-36A	78 g
	Twist selector (3 position)		**3 port**	**5 port**	**3 port**	**5 port**	**3 port**	**5 port**	—	111 g (Add to 2 basic units.)
		Red	VM131-01-35RA	VM151-01-35RA	VM131U-01-35RA	VM151U-01-35RA	VM133-M5-35RA	VM153-M5-35RA		
		Black	VM131-01-35BA	VM151-01-35BA	VM131U-01-35BA	VM151U-01-35BA	VM133-M5-35BA	VM153-M5-35BA		
		Green	VM131-01-35GA	VM151-01-35GA	VM131U-01-35GA	VM151U-01-35GA	VM133-M5-35GA	VM153-M5-35GA		
		Yellow	VM131-01-35YA	VM151-01-35YA	VM131U-01-35YA	VM151U-01-35YA	VM133-M5-35YA	VM153-M5-35YA		

Note 1) It is possible to change the actuator assembly and mount to basic type when an actuator part number is specified in the column.
Note 2) For push button (mushroom), push button (flush), push button (extended) and individual fastening ring, refer to page 1612.
Note 3) The handle of the selector (2 position and 3 position) cannot be removed or replaced alone.
Note 4) Color of plunger: Gray (2 port), White (3 port)

SMC

Courtesy of Steven Engineering, Inc - (800) 258-9200 - sales@steveneng.com - www.stevenengineering.com

How to Order

VM1 3 1 □ - 01 - 01 □ □ A - □ - □□□

Number of ports

2	2 port
3	3 port
5	5 port (Twist selector 3 position only)

Piping direction and the height of plunger

0	Side ported	Long
1		Short
2	Bottom ported	Long
3		Short

Body option

Nil	Side mounting
U	With bottom mounting thread

Note) U: Applicable only to side ported type

Port size

01	Rc1/8	Side ported only
N01	NPT1/8	
F01	G1/8	
M5	M5 x 0.8	Bottom ported only

Actuator type*

Actuator type \ Height of plunger		Side ported Long 0	Side ported Short 1	Bottom ported Long 2	Bottom ported Short 3
00	Basic	○	○	○	○
01	Roller lever	×	○	×	○
02	One way roller lever	×	○	×	○
05	Straight plunger	○	×	○	×
06	Roller plunger	○	×	○	×
07	Cross roller plunger	○	×	○	×
08	Toggle lever	○	×	○	×
30	Push button (Mushroom)	○	×	○	×
32	Push button (Extended)	○	×	○	×
33	Push button (Flush)	○	×	○	×
34	Twist selector (2 position)	○	×	○	×
36	Key selector (2 position)	○	×	○	×
35	Twist selector (3 position)	×	○	×	○

Combination possible: ○ Combination impossible: ×

Suffix for actuator*

S	Hard steel roller	
R	Red	Color of push button, selector
B	Black	
G	Green	
Y	Yellow	

Suffix for indicator

Nil	None
Z	With miniature indicator

Note) Applicable only to bottom ported type

Bracket option

Nil	None
B	With bracket

Note) Applicable only to side ported, side mounting type. However, not applicable to twist selector (3 position). Bracket is shipped together, but not assembled.

Made to Order (Pages1608, 1609)

X207	Alternate type, Mushroom push button
X219	Push-lock turn-reset type, Mushroom push button

Note) Applicable only to push button (mushroom)

* Refer to the table on page 1588 for combinations of actuator type and suffix.

Construction

Side ported

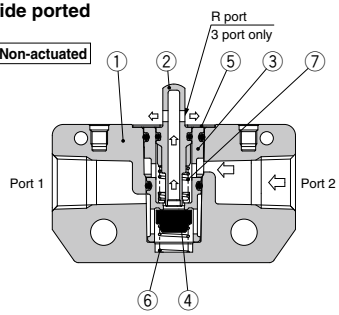

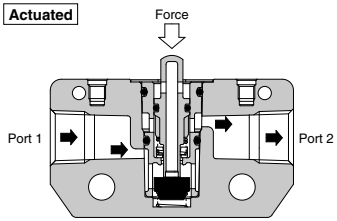

Bottom ported

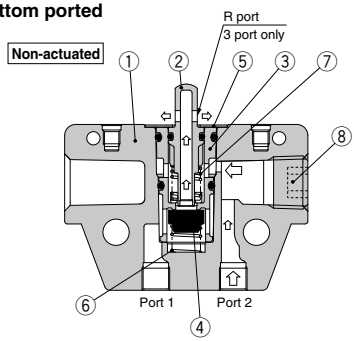

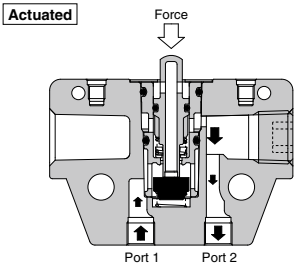

Component Parts

No.	Description	Material	Note	
1	**Valve**	ZDC	White coated	
2	**Plunger**	Polyacetal	2 port	Gray
			3 port	White
3	**Valve sheet**	PBT		
4	**Valve**	NBR		

No.	Description	Material	Note
5	**Plunger retainer**	Stainless steel	
6	**Spring**	Stainless steel	
7	**Spring**	Spring steel	
8	**Hexagon socket head taper plug**	Rolled steel	

Courtesy of Steven Engineering, Inc - (800) 258-9200 - sales@steveneng.com - www.stevenengineering.com

VM100 Series/Side Ported

Basic
VM120-01-00A
VM130-01-00A
VM121-01-00A
VM131-01-00A

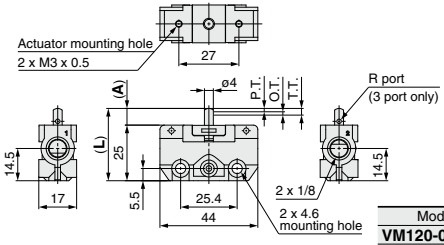

Symbol
2 port

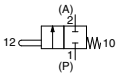

3 port

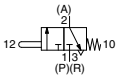

Model	L	A
VM120-01-00A	32.5	7.5
VM130-01-00A		
VM121-01-00A	28.5	3.5
VM131-01-00A		

∗ 0.5 MPa supply

F.O.F.∗	26 N
P.T.	1.5 mm
O.T.	1.5 mm
T.T.	3 mm

Roller lever
VM121-01-01A
VM131-01-01A
VM121-01-01SA
VM131-01-01SA

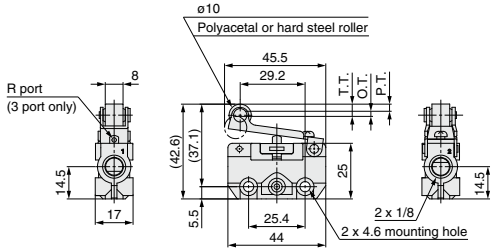

Symbol
2 port

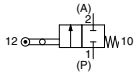

3 port

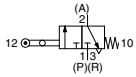

∗ 0.5 MPa supply

F.O.F.∗	13 N
P.T.	3.2 mm
O.T.	2.3 mm
T.T.	5.5 mm

One way roller lever
VM121-01-02A
VM131-01-02A
VM121-01-02SA
VM131-01-02SA

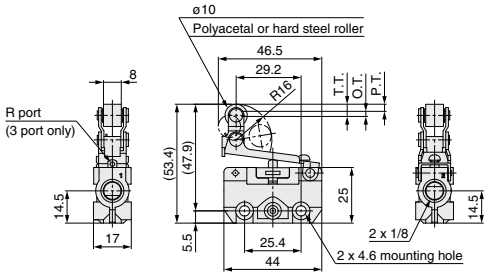

Symbol
2 port

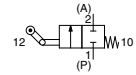

3 port

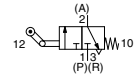

∗ 0.5 MPa supply

F.O.F.∗	13 N
P.T.	3.2 mm
O.T.	2.3 mm
T.T.	5.5 mm

Straight plunger
VM120-01-05A
VM130-01-05A

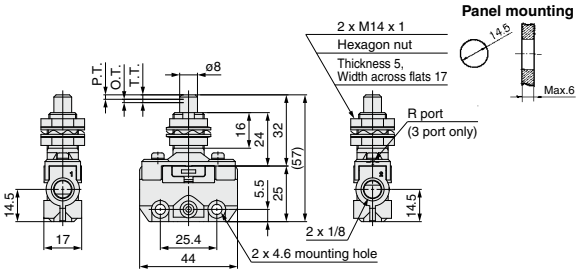

Symbol
2 port

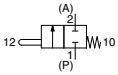

3 port

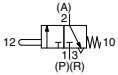

∗ 0.5 MPa supply

F.O.F.∗	29 N
P.T.	2 mm
O.T.	1.5 mm
T.T.	3.5 mm

SMC
Courtesy of Steven Engineering, Inc - (800) 258-9200 - sales@steveneng.com - www.stevenengineering.com

VM100 Series/Side Ported

Roller plunger
VM120-01-06A
VM130-01-06A
VM120-01-06SA
VM130-01-06SA

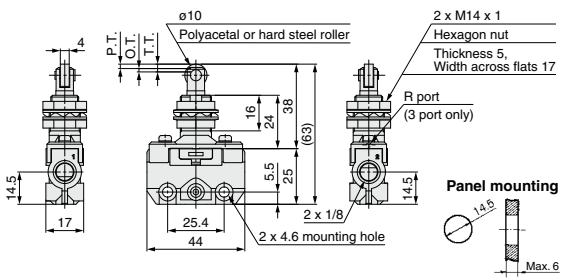

Symbol
2 port
3 port

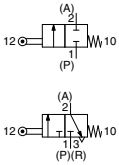

∗ 0.5 MPa supply

F.O.F.*	29 N
P.T.	2 mm
O.T.	1.5 mm
T.T.	3.5 mm

Cross roller plunger
VM120-01-07A
VM130-01-07A
VM120-01-07SA
VM130-01-07SA

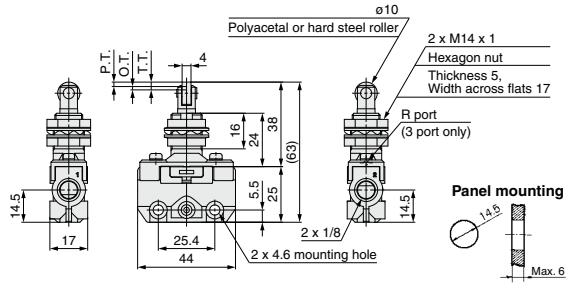

Symbol
2 port
3 port

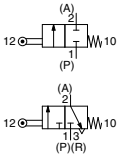

∗ 0.5 MPa supply

F.O.F.*	29 N
P.T.	2 mm
O.T.	1.5 mm
T.T.	3.5 mm

Toggle lever
VM120-01-08A
VM130-01-08A

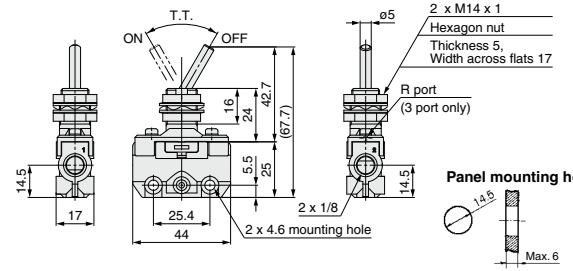

Symbol
2 port
3 port

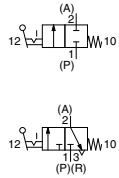

∗ 0.5 MPa supply

F.O.F.*	13 N
T.T.	60°

Push button (Mushroom)
VM120-01-30 (R, B, G, Y) A
VM130-01-30 (R, B, G, Y) A

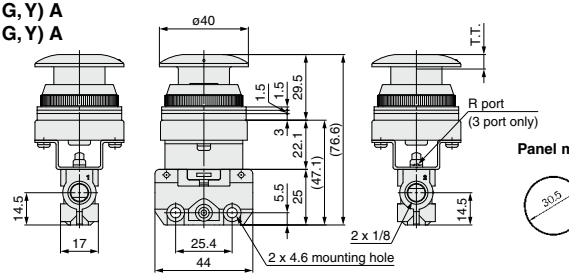

Symbol
2 port
3 port

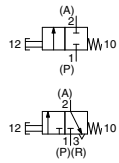

∗ 0.5 MPa supply

F.O.F.*	27 N
T.T.	6.5 mm

Courtesy of Steven Engineering, Inc - (800) 258-9200 - sales@steveneng.com - www.stevenengineering.com

VM100 Series/Side Ported

Push button (Extended)
VM120-01-32 (R, B, G, Y) A
VM130-01-32 (R, B, G, Y) A

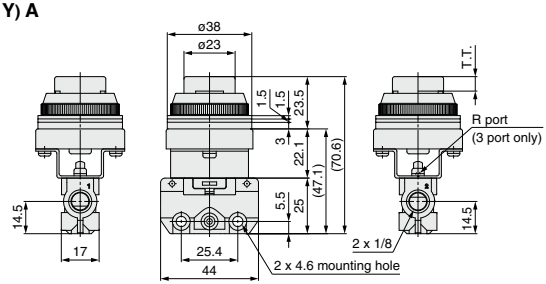

Panel mounting hole

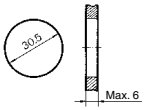

Symbol
2 port

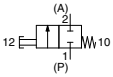

3 port

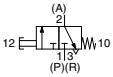

∗ 0.5 MPa supply

F.O.F.*	27 N
T.T.	6.5 mm

Push button (Flush)
VM120-01-33A
VM130-01-33A

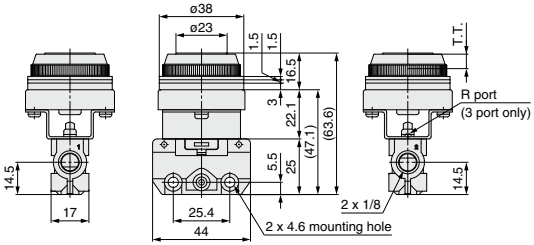

Panel mounting hole

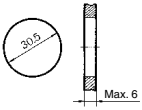

Symbol
2 port

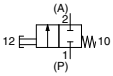

3 port

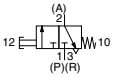

∗ 0.5 MPa supply

F.O.F.*	27 N
T.T.	6.5 mm

Twist selector (2 position)
VM120-01-34 (R, B, G, Y) A
VM130-01-34 (R, B, G, Y) A

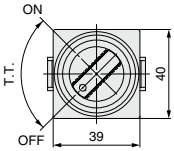

Panel mounting hole

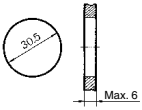

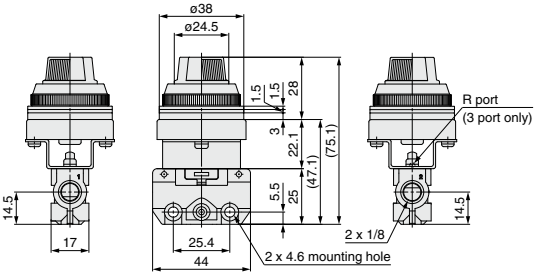

Symbol
2 port

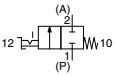

3 port

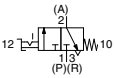

∗ 0.5 MPa supply

F.O.F.*	15 N
T.T.	90°

SMC
Courtesy of Steven Engineering, Inc - (800) 258-9200 - sales@steveneng.com - www.stevenengineering.com

VM100 Series/Side Ported

Key selector (2 position)
VM120-01-36A
VM130-01-36A

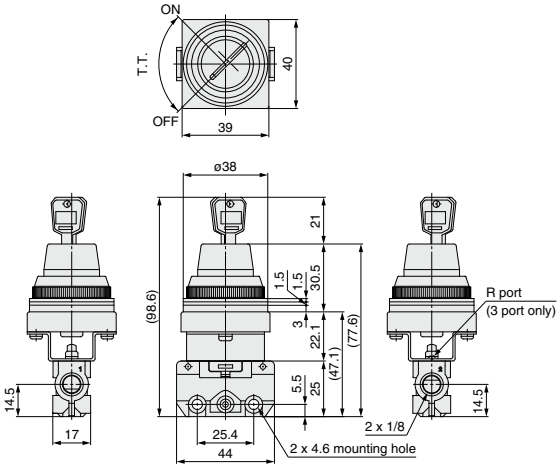

Panel mounting hole

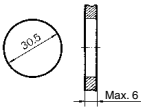

Symbol
2 port

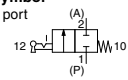

3 port

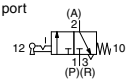

Key can be removed at the "on" and "off" positions.
One spare key is included.

∗ 0.5 MPa supply

F.O.F.∗	15 N
T.T.	90°

Twist selector (3 position)
VM131-01-35 (R, B, G, Y) A
VM151-01-35 (R, B, G, Y) A

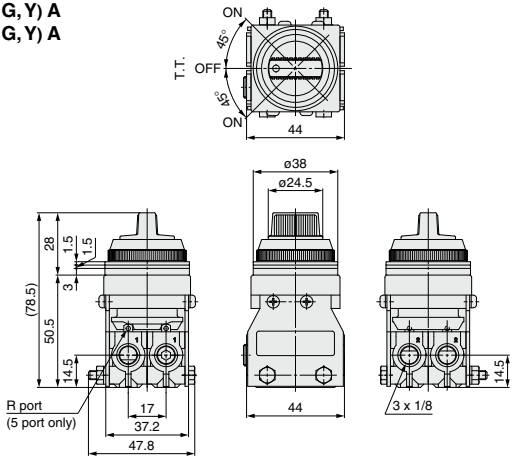

Panel mounting hole

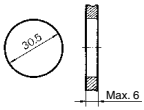

Symbol
3 port

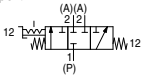

5 port

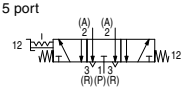

∗ 0.5 MPa supply

F.O.F.∗	20 N
T.T.	45°

Courtesy of Steven Engineering, Inc - (800) 258-9200 - sales@steveneng.com - www.stevenengineering.com

VM100 Series/Side Ported

With bracket
VM120-01-□A-B
VM130-01-□A-B
VM121-01-□A-B
VM131-01-□A-B

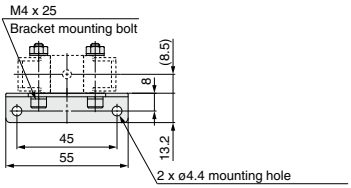

∗ For mounting bolt, a hexagon socket head cap screw is recommended.

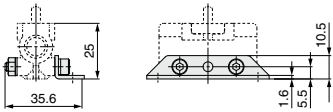

VM1-B

Component parts	Q'ty
Bracket	1
Hexagon socket head cap screw M4 x 25	2
Hexagon nut M4	2

With bottom mounting thread
VM120U-01-□A
VM130U-01-□A
VM121U-01-□A
VM131U-01-□A

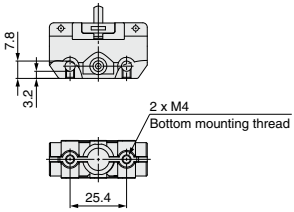

VM131U-01-35□A
VM151U-01-35□A

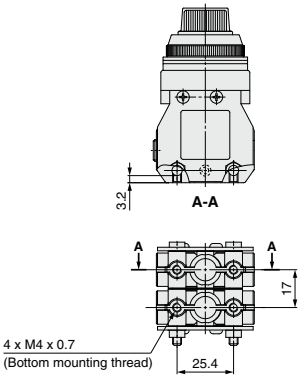

SMC
Courtesy of Steven Engineering, Inc - (800) 258-9200 - sales@steveneng.com - www.stevenengineering.com

VM100 Series/Bottom Ported

Basic
VM122-M5-00A
VM132-M5-00A
VM123-M5-00A
VM133-M5-00A

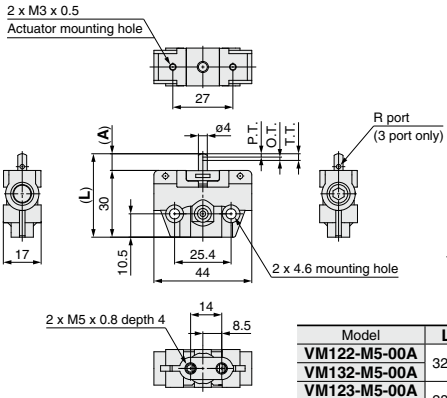

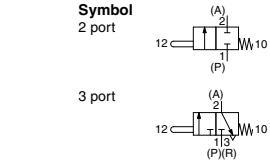

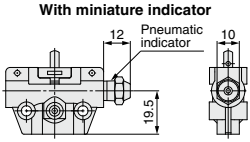

Model	L	A
VM122-M5-00A	32.5	7.5
VM132-M5-00A		
VM123-M5-00A	28.5	3.5
VM133-M5-00A		

∗ 0.5 MPa supply

F.O.F.*	26 N
P.T.	1.5 mm
O.T.	1.5 mm
T.T.	3 mm

Roller lever
VM123-M5-01A
VM133-M5-01A
VM123-M5-01SA
VM133-M5-01SA

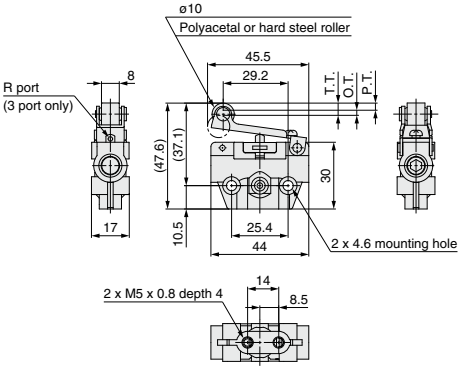

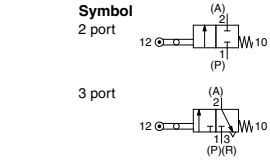

∗ 0.5 MPa supply

F.O.F.*	13 N
P.T.	3.2 mm
O.T.	2.3 mm
T.T.	5.5 mm

One way roller lever
VM123-M5-02A
VM133-M5-02A
VM123-M5-02SA
VM133-M5-02SA

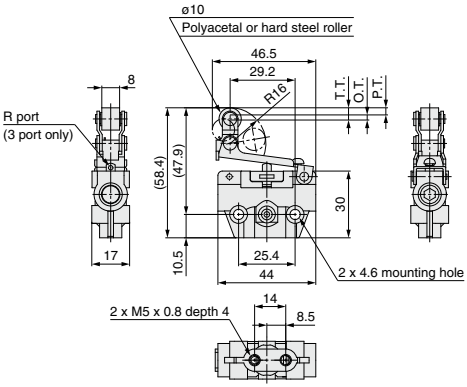

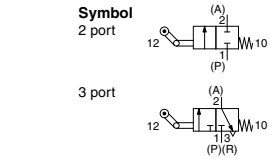

∗ 0.5 MPa supply

F.O.F.*	13 N
P.T.	3.2 mm
O.T.	2.3 mm
T.T.	5.5 mm

Courtesy of Steven Engineering, Inc - (800) 258-9200 - sales@steveneng.com - www.stevenengineering.com

VM100 Series/Bottom Ported

Straight plunger
VM122-M5-05A
VM132-M5-05A

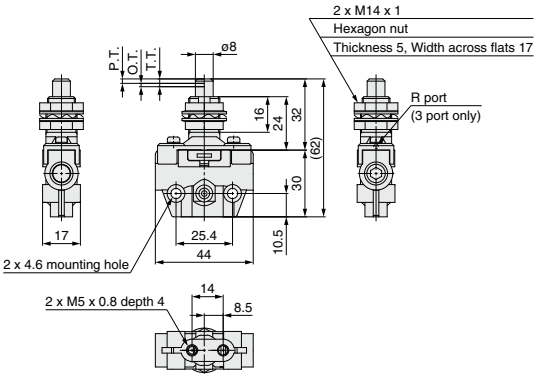

Panel mounting hole

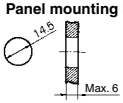

Symbol
2 port

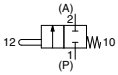

3 port

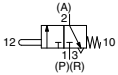

∗ 0.5 MPa supply

F.O.F.*	29 N
P.T.	2 mm
O.T.	1.5 mm
T.T.	3.5 mm

Roller plunger
VM122-M5-06A
VM132-M5-06A
VM122-M5-06SA
VM132-M5-06SA

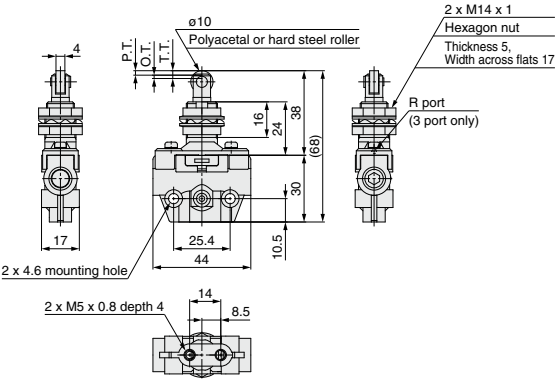

Panel mounting hole

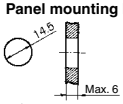

Symbol
2 port

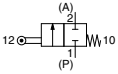

3 port

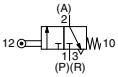

∗ 0.5 MPa supply

F.O.F.*	29 N
P.T.	2 mm
O.T.	1.5 mm
T.T.	3.5 mm

Cross roller plunger
VM122-M5-07A
VM132-M5-07A
VM122-M5-07SA
VM132-M5-07SA

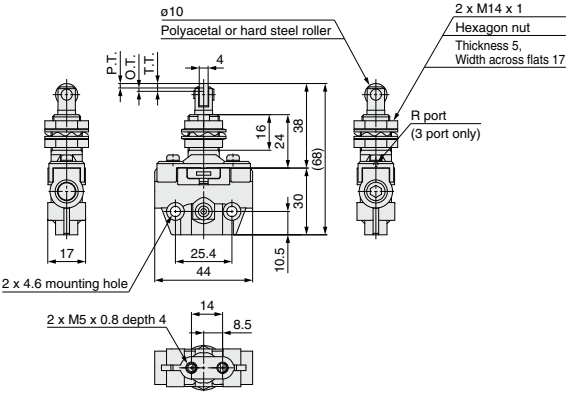

Panel mounting hole

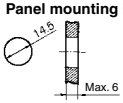

Symbol
2 port

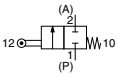

3 port

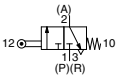

∗ 0.5 MPa supply

F.O.F.*	29 N
P.T.	2 mm
O.T.	1.5 mm
T.T.	3.5 mm

SMC
Courtesy of Steven Engineering, Inc - (800) 258-9200 - sales@steveneng.com - www.stevenengineering.com

VM100 Series/Bottom Ported

Toggle lever
VM122-M5-08A
VM132-M5-08A

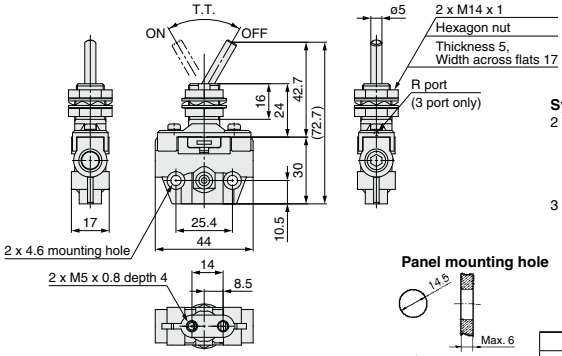

Symbol
2 port

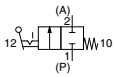

3 port

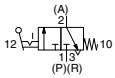

∗ 0.5 MPa supply

F.O.F.*	13 N
T.T.	60°

Push button (Mushroom)
VM122-M5-30 (R, B, G, Y) A
VM132-M5-30 (R, B, G, Y) A

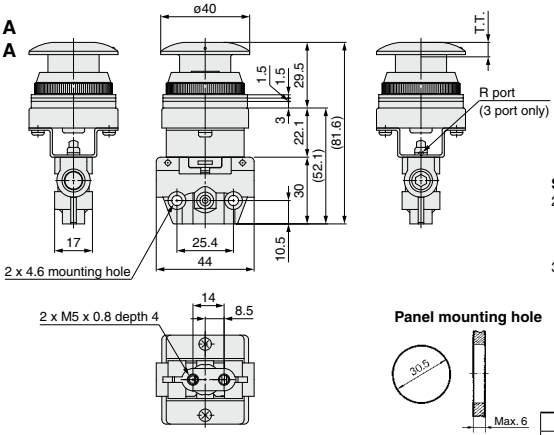

Symbol
2 port

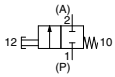

3 port

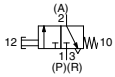

∗ 0.5 MPa supply

F.O.F.*	27 N
T.T.	6.5 mm

Push button (Extended)
VM122-M5-32 (R, B, G, Y) A
VM132-M5-32 (R, B, G, Y) A

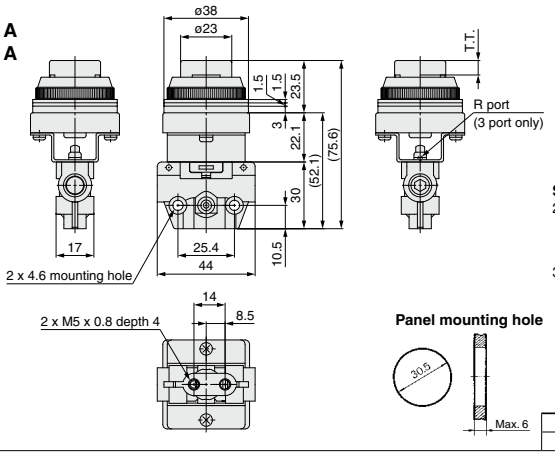

Symbol
2 port

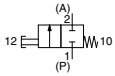

3 port

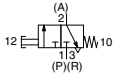

∗ 0.5 MPa supply

F.O.F.*	27 N
T.T.	6.5 mm

Courtesy of Steven Engineering, Inc - (800) 258-9200 - sales@steveneng.com - www.stevenengineering.com

VM100 Series/Bottom Ported

Push button (Flush)
VM122-M5-33A
VM132-M5-33A

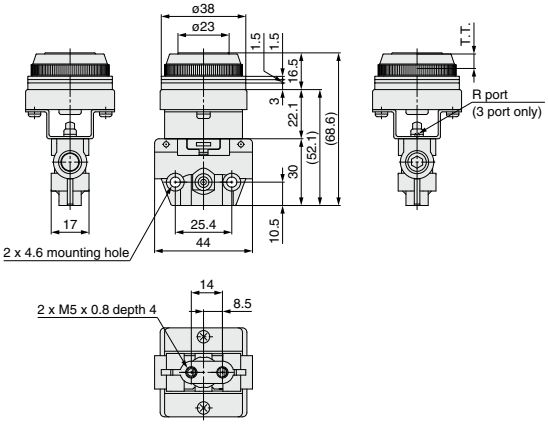

Panel mounting hole

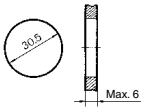

Symbol
2 port

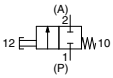

3 port

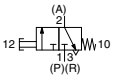

∗ 0.5 MPa supply

F.O.F.*	27 N
T.T.	6.5 mm

Twist selector (2 position)
VM122-M5-34 (R, B, G, Y) A
VM132-M5-34 (R, B, G, Y) A

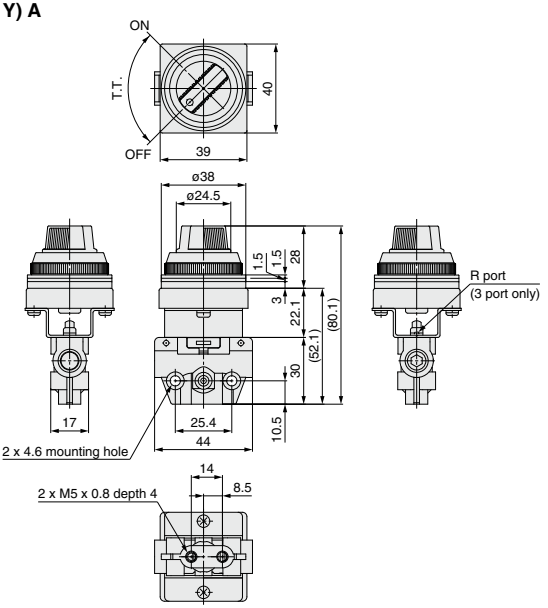

Panel mounting hole

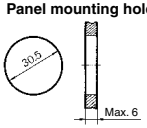

Symbol
2 port

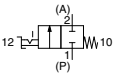

3 port

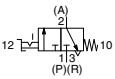

∗ 0.5 MPa supply

F.O.F.*	15 N
T.T.	90°

SMC
Courtesy of Steven Engineering, Inc - (800) 258-9200 - sales@steveneng.com - www.stevenengineering.com

VM100 Series/Bottom Ported

Key selector (2 position)
VM122-M5-36A
VM132-M5-36A

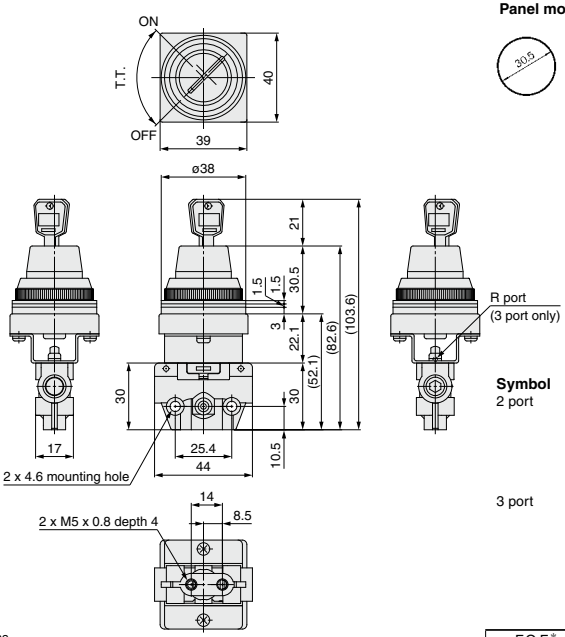

Panel mounting hole

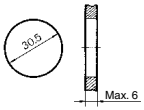

Symbol
2 port

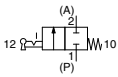

3 port

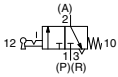

Key can be removed at the "on" and "off" positions.
One spare key is included.

∗ 0.5 MPa supply

F.O.F.∗	15 N
T.T.	90°

Twist selector (3 position)
VM133-M5-35 (R, B, G, Y) A
VM153-M5-35 (R, B, G, Y) A

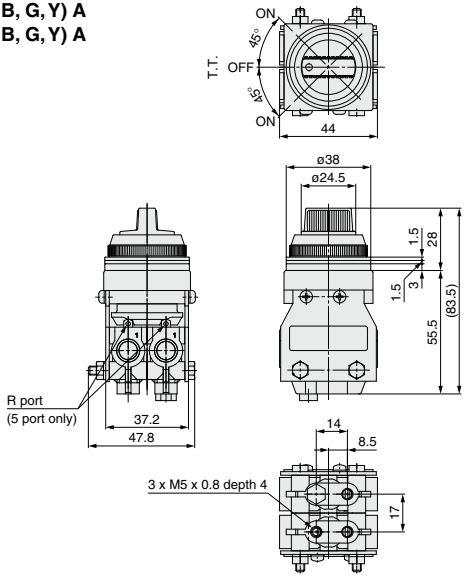

Panel mounting hole

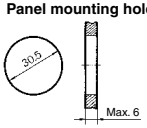

Symbol
3 port

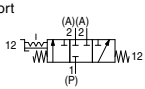

5 port

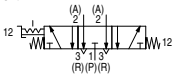

∗ 0.5 MPa supply

F.O.F.∗	20 N
T.T.	45°

Courtesy of Steven Engineering, Inc - (800) 258-9200 - sales@steveneng.com - www.stevenengineering.com

2/3 Port Mechanical Valve
VM200 Series

RoHS

- **Large flow capacity**
- **Possible to choose mounting method: Side mounting, bottom mounting using screws, or mounting with special bracket**
- **A variety of actuator types**

Specifications

Fluid		Air	
Operating pressure range		0 to 1 MPa	
Ambient and fluid temperature		–5 to 60°C (No freezing)	
Flow rate characteristics		1 (P) ⇒ 2 (A)	2 (A) ⇒ 3 (R)
	C [dm³/(s·bar)]	4	3.5
	b	0.4	0.1
	Cv	0.87	0.69
Lubrication Note 1)		Not required	
Port size		1/4	
Weight (Basic)		90 g	
Bracket part number Note 2)		VM2-B	

Note 1) Use turbine oil Class 1 ISO VG32, if lubricated.
Note 2) The bracket can only be used for side mounting.

Model

	Piping direction		Side ported				Actuator	
	Body option		Standard		With bottom mounting thread		Actuator part number	Additional weight for actuator
	Number of ports		**2 port**	**3 port**	**2 port**	**3 port**		
Mechanical operation	Basic		VM220-02-00A	VM230-02-00A	VM220U-02-00A	VM230U-02-00A	—	—
	Roller lever	Polyacetal roller	VM220-02-01A	VM230-02-01A	VM220U-02-01A	VM230U-02-01A	VM-01A	50 g
		Hard steel roller	VM220-02-01SA	VM230-02-01SA	VM220U-02-01SA	VM230U-02-01SA	VM-01AS	60 g
	One way roller lever	Polyacetal roller	VM220-02-02A	VM230-02-02A	VM220U-02-02A	VM230U-02-02A	VM-02A	60 g
		Hard steel roller	VM220-02-02SA	VM230-02-02SA	VM220U-02-02SA	VM230U-02-02SA	VM-02AS	70 g
	Straight plunger		VM220-02-05A	VM230-02-05A	VM220U-02-05A	VM230U-02-05A	VM-05A	130 g
	Roller plunger	Polyacetal roller	VM220-02-06A	VM230-02-06A	VM220U-02-06A	VM230U-02-06A	VM-06A	120 g
		Hard steel roller	VM220-02-06SA	VM230-02-06SA	VM220U-02-06SA	VM230U-02-06SA	VM-06AS	130 g
	Cross roller plunger	Polyacetal roller	VM220-02-07A	VM230-02-07A	VM220U-02-07A	VM230U-02-07A	VM-07A	120 g
		Hard steel roller	VM220-02-07SA	VM230-02-07SA	VM220U-02-07SA	VM230U-02-07SA	VM-07AS	130 g
Manual operation	Toggle lever		VM220-02-08A	VM230-02-08A	VM220U-02-08A	VM230U-02-08A	VM-08A	110 g
	Push button (Mushroom)	Red	VM220-02-30RA	VM230-02-30RA	VM220U-02-30RA	VM230U-02-30RA	VM-30AR	58 g
		Black	VM220-02-30BA	VM230-02-30BA	VM220U-02-30BA	VM230U-02-30BA	VM-30AB	
		Green	VM220-02-30GA	VM230-02-30GA	VM220U-02-30GA	VM230U-02-30GA	VM-30AG	
		Yellow	VM220-02-30YA	VM230-02-30YA	VM220U-02-30YA	VM230U-02-30YA	VM-30AY	
	Push button (Extended)	Red	VM220-02-32RA	VM230-02-32RA	VM220U-02-32RA	VM230U-02-32RA	VM-32AR	52 g
		Black	VM220-02-32BA	VM230-02-32BA	VM220U-02-32BA	VM230U-02-32BA	VM-32AB	
		Green	VM220-02-32GA	VM230-02-32GA	VM220U-02-32GA	VM230U-02-32GA	VM-32AG	
		Yellow	VM220-02-32YA	VM230-02-32YA	VM220U-02-32YA	VM230U-02-32YA	VM-32AY	
	Push button (Flush)	With a set of red, black, green, yellow	VM220-02-33A	VM230-02-33A	VM220U-02-33A	VM230U-02-33A	VM-33A	50 g
	Twist selector (2 position)	Red	VM220-02-34RA	VM230-02-34RA	VM220U-02-34RA	VM230U-02-34RA	VM-34AR	56 g
		Black	VM220-02-34BA	VM230-02-34BA	VM220U-02-34BA	VM230U-02-34BA	VM-34AB	
		Green	VM220-02-34GA	VM230-02-34GA	VM220U-02-34GA	VM230U-02-34GA	VM-34AG	
		Yellow	VM220-02-34YA	VM230-02-34YA	VM220U-02-34YA	VM230U-02-34YA	VM-34AY	
	Key selector (2 position)		VM220-02-36A	VM230-02-36A	VM220U-02-36A	VM230U-02-36A	VM-36A	78 g
	Twist selector (3 position)		**3 port**	**5 port**	**3 port**	**5 port**	—	230 g (Add to 2 basic units.)
		Red	VM230-02-35RA	VM250-02-35RA	VM230U-02-35RA	VM250U-02-35RA		
		Black	VM230-02-35BA	VM250-02-35BA	VM230U-02-35BA	VM250U-02-35BA		
		Green	VM230-02-35GA	VM250-02-35GA	VM230U-02-35GA	VM250U-02-35GA		
		Yellow	VM230-02-35YA	VM250-02-35YA	VM230U-02-35YA	VM250U-02-35YA		
	Foot pedal		**2 port**	**3 port**	—	—	—	340 g
			VM220-02-40A	VM230-02-40A	—	—		

Note 1) It is possible to change the actuator assembly and mount to basic type when an actuator part number is specified in the column.
Note 2) For push button (mushroom), push button (flush), push button (extended) and individual fastening ring, refer to page 1612.
Note 3) The handle of the selector (2 position and 3 position) cannot be removed or replaced alone.
Note 4) Color of plunger: Gray (2 port), White (3 port)

SMC

Courtesy of Steven Engineering, Inc - (800) 258-9200 - sales@steveneng.com - www.stevenengineering.com

How to Order

VM2 3 0 □ - 02 - 01 S A - B - □

Number of ports

2	2 port
3	3 port
5	5 port (Twist selector 3 position only)

Body option

Nil	Side mounting
U	With bottom mounting thread

Port size

02	R1/4
N02	NPT1/4
F02	G1/4

Actuator type*

00	Basic
01	Roller lever
02	One way roller lever
05	Straight plunger
06	Roller plunger
07	Cross roller plunger
08	Toggle lever
30	Push button (Mushroom)
32	Push button (Extended)
33	Push button (Flush)
34	Twist selector (2 position)
36	Key selector (2 position)
35	Twist selector (3 position)
40	Foot pedal

Suffix for actuator*

S	Hard steel roller	
R	Red	Color of push button, selector
B	Black	
G	Green	
Y	Yellow	

Made to Order (Pages 1608, 1609)

X207	Alternate type, Mushroom push button
X219	Push-lock turn-reset type, Mushroom push button

Note) Applicable only to push button (mushroom)

Bracket option

Nil	None
B	With bracket

Note) Applicable only to side mounting type.
However, not applicable to twist selector (3 position) and foot pedal.
Bracket is shipped together, but not assembled.

* **Refer to the table on page 1600 for combinations of actuator type and suffix.**

Construction

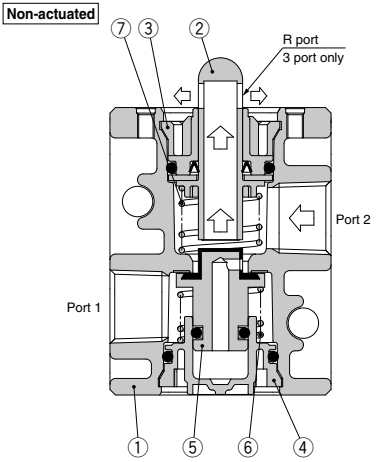

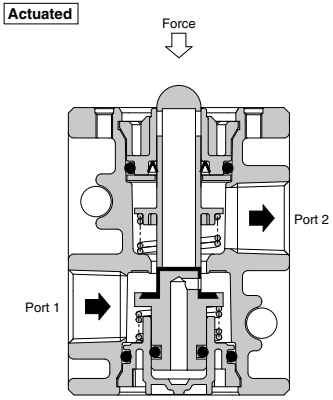

Component Parts

No.	Description	Material	Note	
1	**Valve**	ADC	White coated	
2	**Plunger**	Polyacetal	2 port	Gray
			3 port	White
3	**Plunger retainer**	PBT		
4	**Cover**	PBT		
5	**Inner valve**	NBR, Brass		
6	**Spring**	Stainless steel		
7	**Spring**	Spring steel		

Courtesy of Steven Engineering, Inc - (800) 258-9200 - sales@steveneng.com - www.stevenengineering.com

VM200 Series

Basic
VM220-02-00A
VM230-02-00A

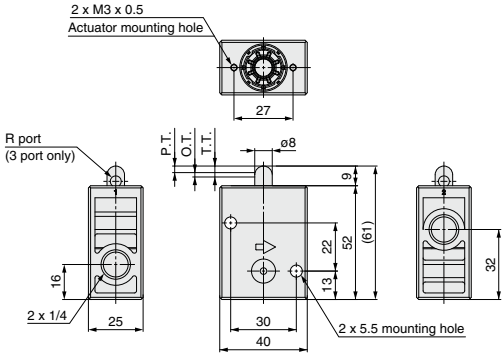

Symbol
2 port

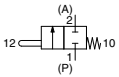

3 port

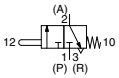

∗ 0.5 MPa supply

F.O.F.∗	52 N
P.T.	3 mm
O.T.	2 mm
T.T.	5 mm

Roller lever
VM220-02-01A
VM230-02-01A
VM220-02-01SA
VM230-02-01SA

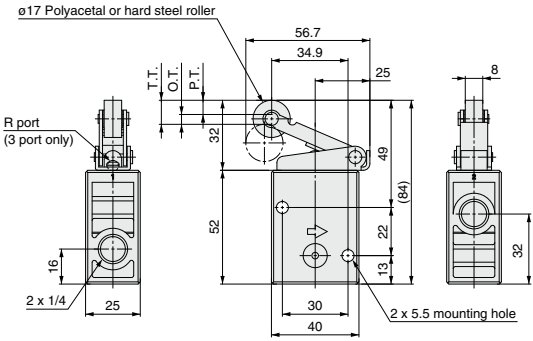

Symbol
2 port

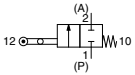

3 port

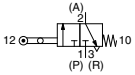

∗ 0.5 MPa supply

F.O.F.∗	24 N
P.T.	6.5 mm
O.T.	4.5 mm
T.T.	11 mm

One way roller lever
VM220-02-02A
VM230-02-02A
VM220-02-02SA
VM230-02-02SA

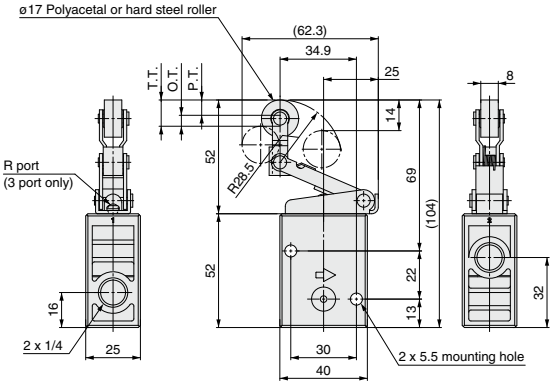

Symbol
2 port

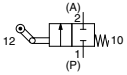

3 port

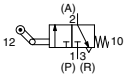

∗ 0.5 MPa supply

F.O.F.∗	22 N
P.T.	7 mm
O.T.	5 mm
T.T.	12 mm

SMC
Courtesy of Steven Engineering, Inc - (800) 258-9200 - sales@steveneng.com - www.stevenengineering.com

VM200 Series

Straight plunger
VM220-02-05A
VM230-02-05A

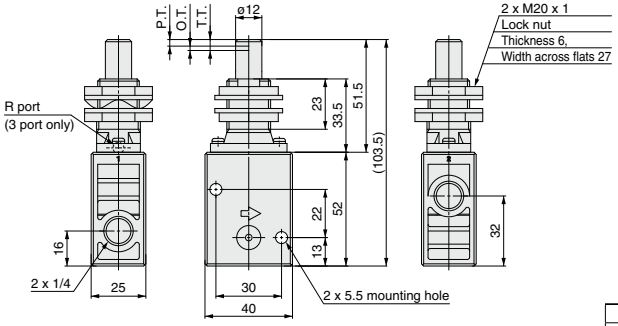

Panel mounting hole

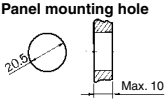

Symbol
2 port

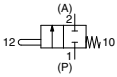

3 port

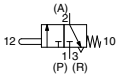

∗ 0.5 MPa supply

F.O.F.∗	56 N
P.T.	3.5 mm
O.T.	2 mm
T.T.	5.5 mm

Roller plunger
VM220-02-06A
VM230-02-06A
VM220-02-06SA
VM230-02-06SA

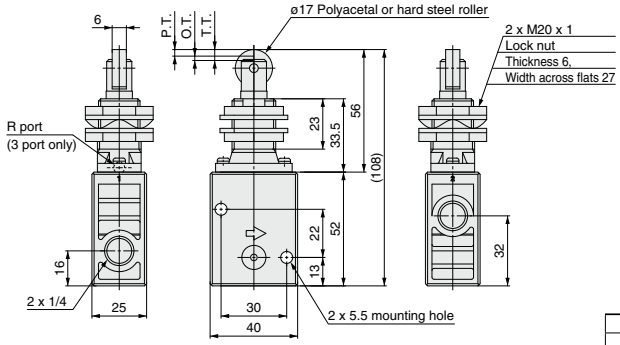

Panel mounting hole

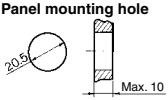

Symbol
2 port

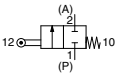

3 port

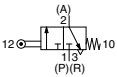

∗ 0.5 MPa supply

F.O.F.∗	56 N
P.T.	3.5 mm
O.T.	2 mm
T.T.	5.5 mm

Cross roller plunger
VM220-02-07A
VM230-02-07A
VM220-02-07SA
VM230-02-07SA

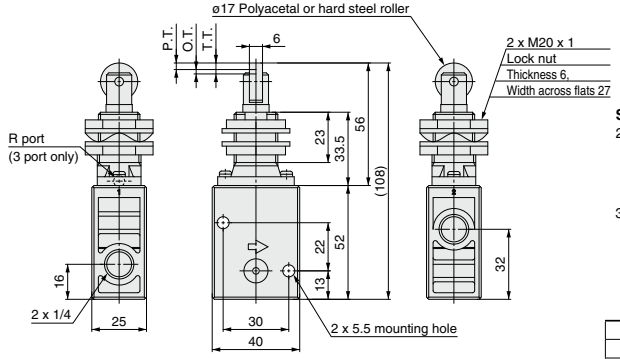

Panel mounting hole

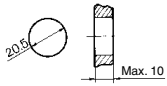

Symbol
2 port

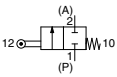

3 port

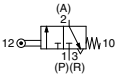

∗ 0.5 MPa supply

F.O.F.∗	56 N
P.T.	3.5 mm
O.T.	2 mm
T.T.	5.5 mm

Courtesy of Steven Engineering, Inc - (800) 258-9200 - sales@steveneng.com - www.stevenengineering.com

VM200 Series

Toggle lever
VM220-02-08A
VM230-02-08A

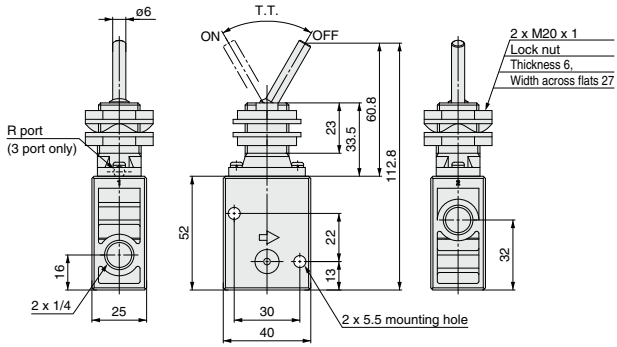

Panel mounting hole

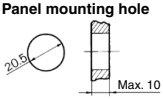

Symbol
2 port

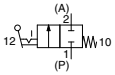

3 port

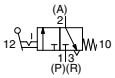

∗ 0.5 MPa supply

F.O.F.∗	12 N
T.T.	60°

Push button (Mushroom)
VM220-02-30 (R, B, G, Y) A
VM230-02-30 (R, B, G, Y) A

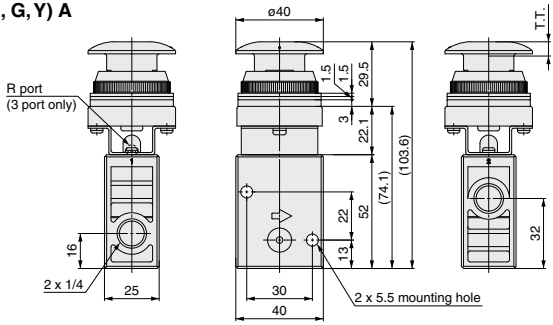

Panel mounting hole

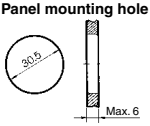

Symbol
2 port

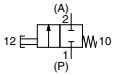

3 port

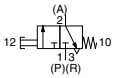

∗ 0.5 MPa supply

F.O.F.∗	52 N
T.T.	6.5 mm

Push button (Extended)
VM220-02-32 (R, B, G, Y) A
VM230-02-32 (R, B, G, Y) A

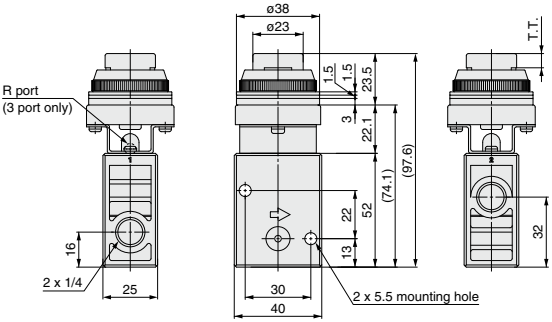

Panel mounting hole

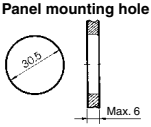

Symbol
2 port

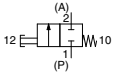

3 port

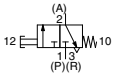

∗ 0.5 MPa supply

F.O.F.∗	52 N
T.T.	6.5 mm

Courtesy of Steven Engineering, Inc - (800) 258-9200 - sales@steveneng.com - www.stevenengineering.com

VM200 Series

Push button (Flush)
VM220-02-33A
VM230-02-33A

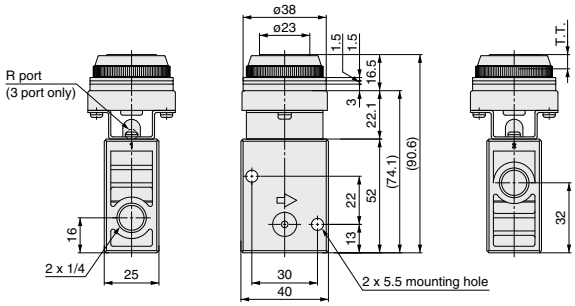

Panel mounting hole

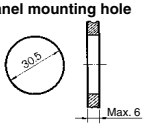

Symbol
2 port

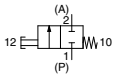

3 port

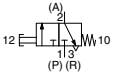

∗ 0.5 MPa supply

F.O.F.∗	52 N
T.T.	6.5 mm

Twist selector (2 position)
VM220-02-34 (R, B, G, Y) A
VM230-02-34 (R, B, G, Y) A

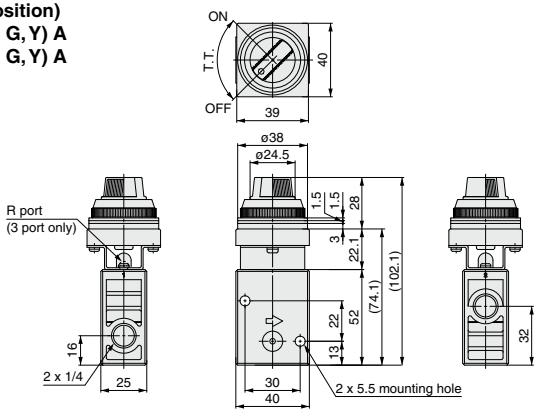

Panel mounting hole

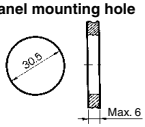

Symbol
2 port

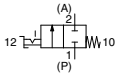

3 port

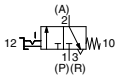

∗ 0.5 MPa supply

F.O.F.∗	32 N
T.T.	90°

Key selector (2 position)
VM220-02-36A
VM230-02-36A

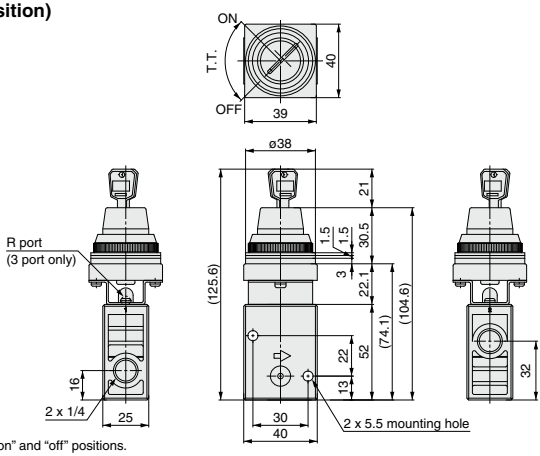

Panel mounting hole

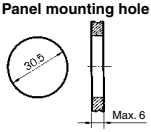

Symbol
2 port

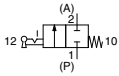

3 port

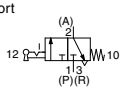

∗ 0.5 MPa supply

F.O.F.∗	32 N
T.T.	90°

Key can be removed at the "on" and "off" positions.
One spare key is included.

Courtesy of Steven Engineering, Inc - (800) 258-9200 - sales@steveneng.com - www.stevenengineering.com

VM200 Series

Twist selector (3 position)
VM230-02-35 (R, B, G, Y) A
VM250-02-35 (R, B, G, Y) A

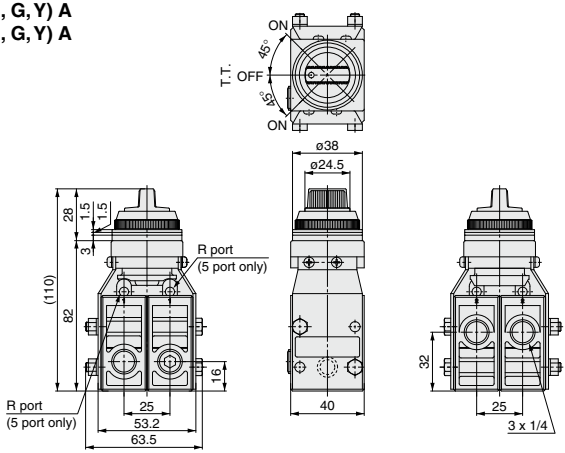

Panel mounting hole

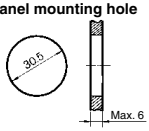

Symbol
3 port

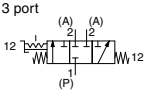

5 port

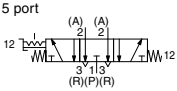

∗ 0.5 MPa supply

F.O.F.∗	40 N
T.T.	45°

Foot pedal
VM220-02-40A
VM230-02-40A

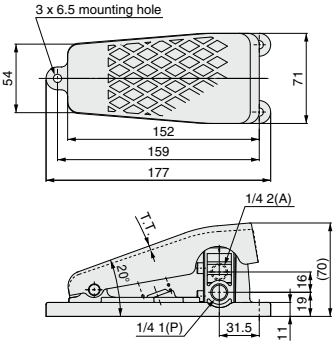

Symbol
2 port

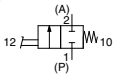

3 port

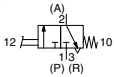

∗ 0.5 MPa supply

F.O.F.∗	65 N
T.T.	1.2°

SMC
Courtesy of Steven Engineering, Inc - (800) 258-9200 - sales@steveneng.com - www.stevenengineering.com

VM200 Series

With bracket
VM220-02-□A-B
VM230-02-□A-B

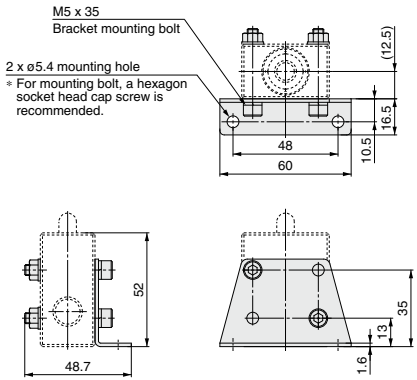

VM2-B

Component parts	Q'ty
Bracket	1
Hexagon socket head cap screw M5 x 35	2
Hexagon nut M5	2

With bottom mounting thread
VM220U-02-□A
VM230U-02-□A

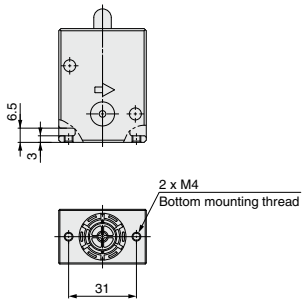

VM230U-02-35□A
VM250U-02-35□A

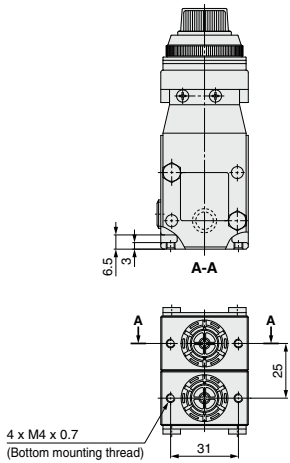

Courtesy of Steven Engineering, Inc - (800) 258-9200 - sales@steveneng.com - www.stevenengineering.com

Made to Order

Please contact SMC for detailed specifications, dimensions and lead times.

Made to Order

Symbol

1 Alternate type, Mushroom push button — -X207

Alternate type: When pressing the push button, the valve actuates and its status is self-retained even after your hand has been released. Pressing the button again will restore the valve to its previous status.

VM120-01-30 (R, B, G, Y) A-X207
VM130-01-30 (R, B, G, Y) A-X207

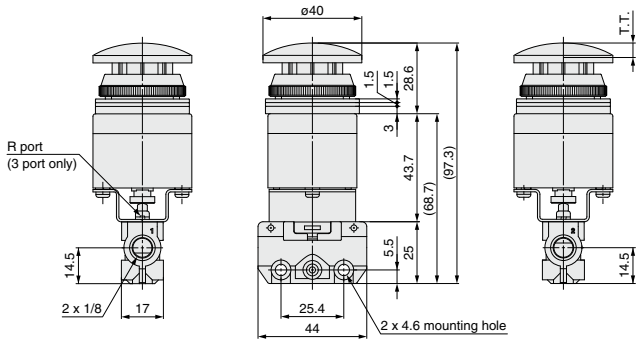

Panel mounting hole

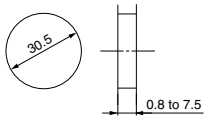

Symbol

2 port

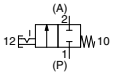

3 port

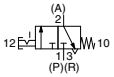

∗ 0.5 MPa supply

F.O.F.∗	27 N
T.T.	6.7 mm

VM220-02-30 (R, B, G, Y) A-X207
VM230-02-30 (R, B, G, Y) A-X207

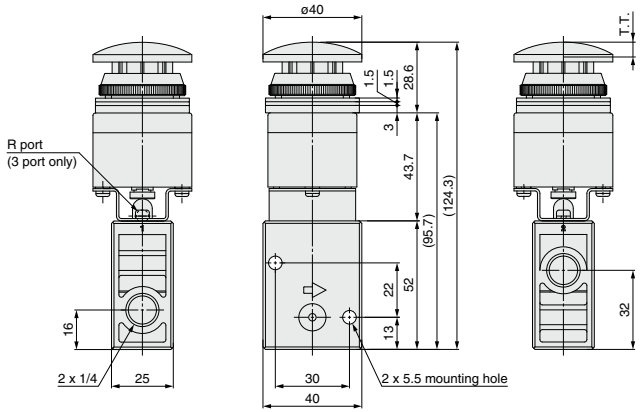

Panel mounting hole

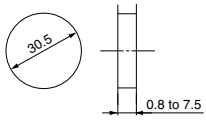

Symbol

2 port

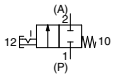

3 port

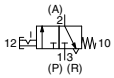

∗ 0.5 MPa supply

F.O.F.∗	52 N
T.T.	6.7 mm

SMC

Courtesy of Steven Engineering, Inc - (800) 258-9200 - sales@steveneng.com - www.stevenengineering.com

Symbol

2 Push-lock turn-reset type, Mushroom push button **-X219**

Push-lock turn-reset type: When pressing the push button, it is locked in this status. Turning the button clockwise will reset it.

VM120-01-30 (R, B, G, Y) A-X219
VM130-01-30 (R, B, G, Y) A-X219

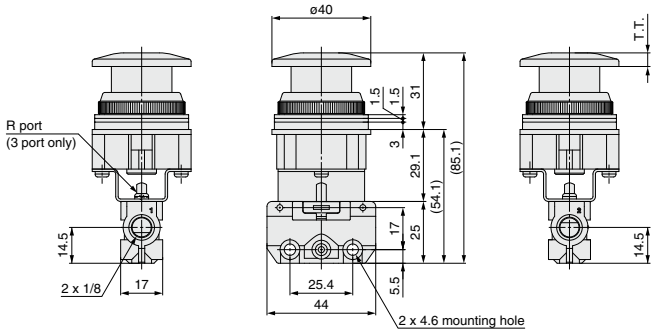

Panel mounting hole

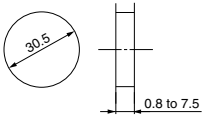

Symbol

2 port

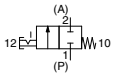

3 port

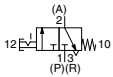

∗ 0.5 MPa supply

F.O.F.∗	27 N
T.T.	5.8 mm

VM220-02-30 (R, B, G, Y) A-X219
VM230-02-30 (R, B, G, Y) A-X219

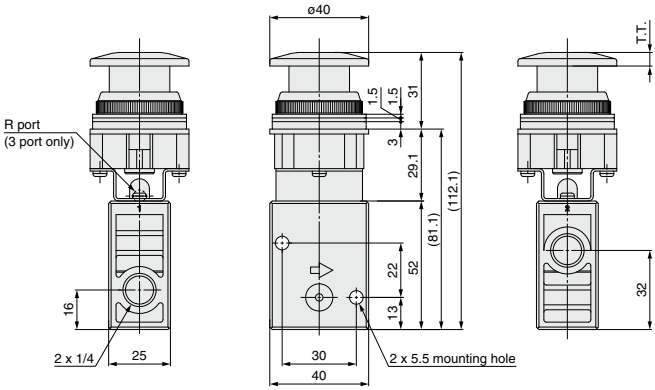

Panel mounting hole

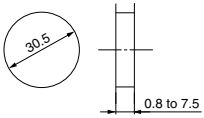

Symbol

2 port

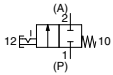

3 port

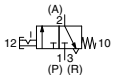

∗ 0.5 MPa supply

F.O.F.∗	52 N
T.T.	5.8 mm

Courtesy of Steven Engineering, Inc - (800) 258-9200 - sales@steveneng.com - www.stevenengineering.com

VM100/200 Series
Specific Product Precautions 1

Be sure to read this before handling the products.
Refer to back page 50 for Safety Instructions and pages 3 to 9 for 3/4/5 Port Solenoid Valve Precautions.

Definition of Symbol

The abbreviations F.O.F. / P.T. / O.T. / T.T. shown in this catalog are detailed below.

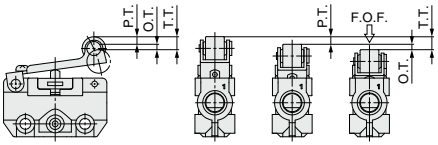

- **F.O.F. <Full Operating Force>**
  Required force to total travel position
- **P.T. <Pre-travel>**
  From free position to initial valve operating position
- **O.T. <Over Travel>**
  From initial valve operating position to total travel position
- **T.T. <Total Travel>**
  From free position to total travel position

Design

⚠ Warning

1. This product cannot be used for applications in which the pressure must be sealed.

Since the VM100 and VM200 are poppet type valves, fluid flows backward when the pressure on port 2 (A) rises.
Since the valves are subject to air leakage, they cannot be used for applications such as holding pressure (including vacuum).

2. Not suitable for use as an emergency shutoff valve

This mechanical valve is not designed for safety applications such as an emergency shutoff valve. If the valves are used for the mentioned applications, additional safety measures should be adopted.

Mounting

⚠ Warning

1. When installing the mechanical operation type mechanical valves, adjust the position so that the valves do not operate over the operating limit range.

Operating over the limit could damage the mechanical valve or actuator, and lead to equipment malfunction.

Mounting

⚠ Warning

2. P.T. depends on pressure or differences between the individual product specifications. In order to ensure that the valve opens, keep the operating stroke value for the mechanical operation type within the range specified by the following formula.

Operating stroke = (P.T. + 0.5 x O.T.) to (P.T. + O.T. – 0.1)

Operating Stroke Range

Series	Actuator type	Operating stroke (mm)
VM100	Basic	2.2 to 2.9
	Roller lever	4.3 to 5.4
	One way roller lever	4.3 to 5.4
	Straight plunger	2.7 to 3.4
	Roller plunger	2.7 to 3.4
	Cross roller plunger	2.7 to 3.4
VM200	Basic	4 to 4.9
	Roller lever	8.7 to 10.9
	One way roller lever	9.5 to 11.9
	Straight plunger	4.5 to 5.4
	Roller plunger	4.5 to 5.4
	Cross roller plunger	4.5 to 5.4

For straight and roller plunger types, there is a groove indicating P.T. and T.T. for stroke adjustment.

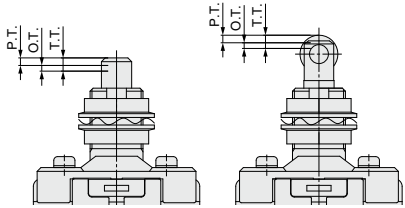

3. Do not make any alterations to the valve body, such as enlarging the body mounting holes.

As doing so could lead to unexpected abnormal conditions such as air leakage.

Operation

⚠ Warning

1. Operate the manual operation type mechanical valves (such as push button, twist selector and toggle lever types) with your finger.

The use of equipment such as a cylinder, cam or hammer, can result in the actuator and the valve being damaged.
Do not operate over the operation limit. If excessive operation force is applied over total travel position, actuator part can get deformed and lead to equipment malfunction.

SMC
Courtesy of Steven Engineering, Inc - (800) 258-9200 - sales@steveneng.com - www.stevenengineering.com

VM100/200 Series
Specific Product Precautions 2

Be sure to read this before handling the products.
Refer to back page 50 for Safety Instructions and pages 3 to 9 for 3/4/5 Port Solenoid Valve Precautions.

Operation

⚠ Warning

2. When operating the mechanical operation type mechanical valves, select the angle and the maximum speed limit of cam and dog so that valves do not operate over the following maximum values.

If operated over the maximum values, impact force from cam and dog will be applied to the actuator, leading to damage of the actuator or the valve itself.

Cam and Dog

Series	Actuator type	Angle limit of cam and dog	Max. speed limit of cam and dog (m/s)
VM100	Roller lever	30°	0.7
		45°	0.3
	One way roller lever	30°	0.7
		45°	0.3
	Straight plunger	—	0.2
	Roller plunger	30°	0.3
	Cross roller plunger	30°	0.3
VM200	Roller lever	30°	0.7
		45°	0.3
	One way roller lever	30°	0.7
		45°	0.3
	Straight plunger	—	0.2
	Roller plunger	30°	0.3
	Cross roller plunger	30°	0.3

[Not acceptable] **[Acceptable]**

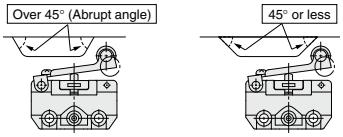

[Not acceptable] **[Acceptable]**

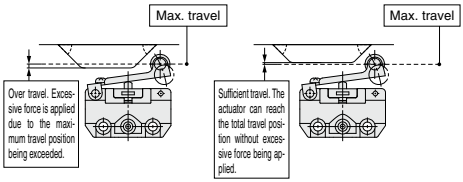

Cam and Dog Material

Roller material	Cam and dog material	Surface finish of cam and dog
Polyacetal	Steel	6.3 z or less
Hard steel	Steel, Resin	25 z or less

3. Operate the roller lever type from the direction shown below.

In cases where the dog goes over the actuator, select the one way roller lever type or the roller plunger type.

[Not acceptable] **[Acceptable]**

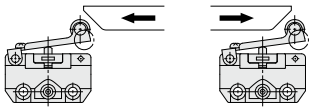

Operation

⚠ Caution

1. If the operating condition is maintained for long periods of time, it may take some time for the valve to restart due to the adherence of the seals and there might be a delay for recovery.

Air Supply

⚠ Warning

1. Operable fluid is either air or inert gas only.

It cannot be used for corrosive gas and fluid.

⚠ Caution

1. Grease is used for the inside of the valves.

Grease may enter into the outlet port of the valve.

2. When using vacuum pressure for the VM100, supply vacuum pressure to P port.

Operating Environment

⚠ Warning

1. Do not operate it in an area in which fluids such as oil, coolant, or water splash on it or dust comes in contact with it.

Because it does not have a waterproof or dustproof construction, fluids or dust could enter the valve, leading to malfunction. Therefore, take measures such as providing a protective cover to prevent direct exposure.

2. Do not expose the product to direct sunlight for an extended period of time.

Maintenance

⚠ Warning

1. Perform inspections on a regular basis as necessary, such as at the beginning of an operation, to make sure that the mechanical valve operates properly.

2. Do not disassemble, modify or repair the product.

This may lead to malfunction of equipment, injury and equipment damage. Please contact SMC for repairs and maintenance of the product.

Courtesy of Steven Engineering, Inc - (800) 258-9200 - sales@steveneng.com - www.stevenengineering.com

VM100/200 Series
Specific Product Precautions 3

Be sure to read this before handling the products.
Refer to back page 50 for Safety Instructions and pages 3 to 9 for 3/4/5 Port Solenoid Valve Precautions.

How to Change the Buttons

⚠ Caution

Replace the button in the following manner to change color of the button.

1. Push button (Flush type)

- Installation —— Of the four colors, red, green, black, and yellow, select and align the protruding portion of the button with the recessed portion of the body and push in.
- Removal ——— Remove the fastening ring and insert the tip of a small flat head screwdriver into the groove of the button to pry it up.

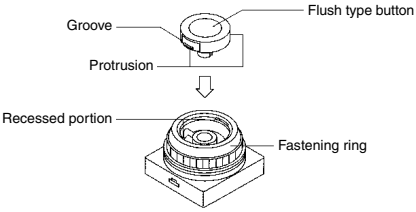

2. Push button (Mushroom and Extended types)

At the time of shipment, only 1 button of the color that you specified is attached to the body.

	Mushroom type	Extended type
Installation	Align the protruding portion of the button with the recessed portion of the body and push in. (Use the mark on the button as a reference to align the protruding part.)	Align the protruding portion of the button with the recessed portion of the body and push in.
Removal	Placing your finger under the collar of the button on the side of the mark, tilt it upward.	Remove the fastening ring and insert the tip of a small flat head screwdriver into the groove of the button to pry it up.

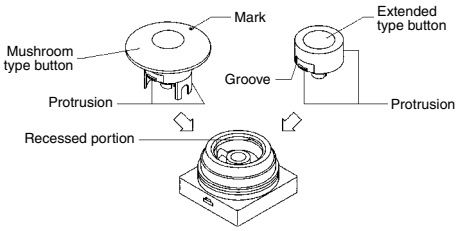

How to remove a mushroom type button

How to remove at panel mount

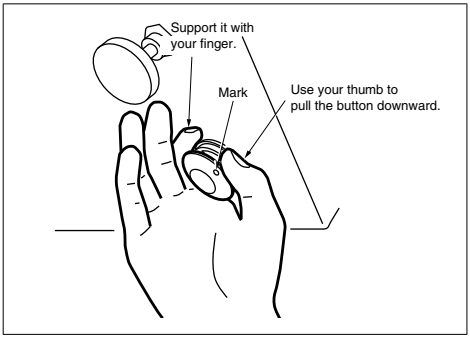

Removing the valve as a unit

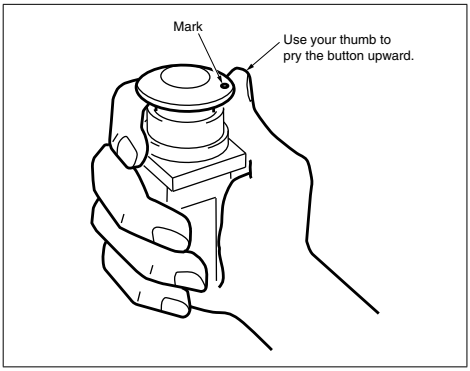

Replacement Parts

1. Use the part numbers listed below to order individual mushroom, extended, or flush type buttons.

Color	Mushroom type button	Extended type button
Red	3402186R	3402187R
Black	3402186B	3402187B
Green	3402186G	3402187G
Yellow	3402186Y	3402187Y

Color	Flush type button
Red	3402188R
Black	3402188B
Green	3402188G
Yellow	3402188Y

2. Use the part number below to order individual fastening ring.
   Fastening ring: 3402184

SMC
Courtesy of Steven Engineering, Inc - (800) 258-9200 - sales@steveneng.com - www.stevenengineering.com

VM100/200 Series
Specific Product Precautions 4

Be sure to read this before handling the products.
Refer to back page 50 for Safety Instructions and pages 3 to 9 for 3/4/5 Port Solenoid Valve Precautions.

VM-X219 Series How to Mount Panel

[Task 1] Removing the push button and fastening ring

Remove them from the body turning them counterclockwise in the order of the push button and fastening ring.

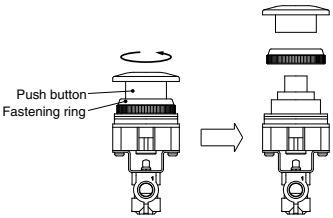

[Task 2] Mounting the valve to the panel

Insert the valve to the panel and fix it with a fastening ring.
Remove three spacers attached to the valve depending on the panel thickness.

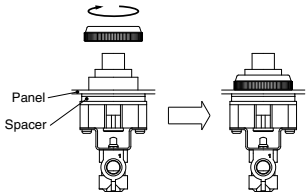

[Task 3] Mounting the push button

Tighten the push button clockwise by hand and further tighten it until load is applied.

Note) When the push button is not tightened enough, the valve may not output correctly after operating the push button. In other cases, the valve outputs temporarily, but when it is in the holding state, the valve may stop outputting. In this situation, tighten the push button again.

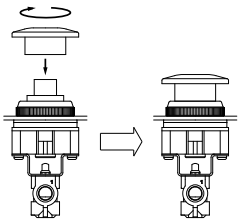

Courtesy of Steven Engineering, Inc - (800) 258-9200 - sales@steveneng.com - www.stevenengineering.com

3 Port Mechanical Valve
VM400 Series

RoHS

Either N.C. or N.O. is available.

Piping possible to any port.

Proper countermeasures can be taken for applications in which the noise of the exhaust could cause problems to the surroundings.

Specifications

Fluid		Air		
Operating pressure		–100 kPa to 1.0 MPa		
Ambient and fluid temperature		–5 to 60°C (No freezing)		
Flow rate characteristics		C[dm³/(s·bar)]	b	Cv
	1(NC)↔2(OUT)	1.4	0.2	0.29
	2(NO)↔3(OUT)	1.4	0.15	0.29
Lubrication		Not required (Use turbine oil Class 1 ISO VG32, if lubricated)		
Port size		1/8		

Model

	Actuator	Model	Actuator part no.	Application	Weight (g)
Mechanical operation	Basic	VM430-01-00	—	—	110
	Roller lever	VM430-01-01	VM-01A	Polyacetal roller	140
		VM430-01-01S	VM-01AS	Hard steel roller	150
	One way roller lever	VM430-01-02	VM-02A	Polyacetal roller	150
		VM430-01-02S	VM-02AS	Hard steel roller	160
	Straight plunger	VM430-01-05	VM-05A	—	220
	Roller plunger	VM430-01-06	VM-06A	Polyacetal roller	210
		VM430-01-06S	VM-06AS	Hard steel roller	220
	Cross roller plunger	VM430-01-07	VM-07A	Polyacetal roller	210
		VM430-01-07S	VM-07AS	Hard steel roller	220
Manual operation	Toggle lever	VM430-01-08	VM-08A	—	200
	Push button (Mushroom)	VM430-01-30R	VM-30AR	Red	168
		VM430-01-30B	VM-30AB	Black	
		VM430-01-30G	VM-30AG	Green	
		VM430-01-30Y	VM-30AY	Yellow	
	Push button (Extended)	VM430-01-32R	VM-32AR	Red	162
		VM430-01-32B	VM-32AB	Black	
		VM430-01-32G	VM-32AG	Green	
		VM430-01-32Y	VM-32AY	Yellow	
	Push button (Flush)	VM430-01-33	VM-33A	With a set of red, black, green, yellow	167
	Twist selector (2 position)	VM430-01-34R	VM-34AR	Red	168
		VM430-01-34B	VM-34AB	Black	
		VM430-01-34G	VM-34AG	Green	
		VM430-01-34Y	VM-34AY	Yellow	
	Key selector (2 position)	VM430-01-36	VM-36A	—	188

Note 1) Actuator replacement is available for all types.
Note 2) For push button (mushroom), push button (extended), push button (flush) and a single unit of fastening ring, refer to pages 1655 and 1656. The other parts are not replaceable.
Note 3) The handle of the selector (2 position) cannot be removed or replaced alone.

SMC

Courtesy of Steven Engineering, Inc - (800) 258-9200 - sales@steveneng.com - www.stevenengineering.com

How to Order

VM4 3 0 – 01 – 01 S –

Number of ports

3	3 port

Port size

01	Rc 1/8
N01	NPT 1/8
F01	G 1/8

Actuator type*

00	Basic
01	Roller lever
02	One way roller lever
05	Straight plunger
06	Roller plunger
07	Cross roller plunger
08	Toggle lever
30	Push button (Mushroom)
32	Push button (Extended)
33	Push button (Flush) Note 1)
34	Twist selector (2 position)
36	Key selector (2 position)

Note 1) When selecting the flush type, it is not necessary to select the suffix for the actuator.

Suffix for actuator*

S	Hard steel roller	
R	Red	Color of push button selector
B	Black	
G	Green	
Y	Yellow	

Made to Order
(Refer to pages 1648 to 1651 for details.)

X207	Alternate type, Mushroom push button
X219	Push-lock turn-reset type, Mushroom push button

* **Refer to the table on page 1614 for combinations of actuator type and suffix.**

Construction

Non-actuated

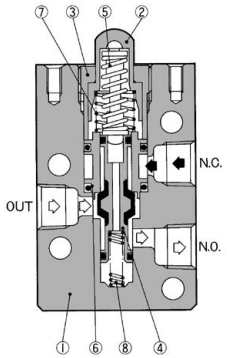

Actuated

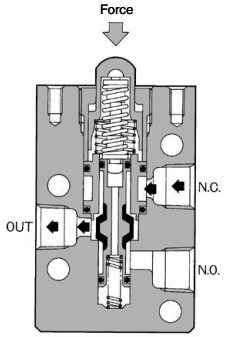

Component Parts

No.	Description	Material	Note
1	**Body**	ADC	Platinum silver
2	**Plunger**	POM	
3	**Upper lid**	Brass	Black zinc chromated
4	**Spool valve**	Aluminum alloy, NBR	Rubber lined

No.	Description	Material	Note
5	**Over travel spring**	Stainless steel	
6	**Retainer**	Brass	
7	**Spring**	Stainless steel	
8	**Spring**	Stainless steel	

Courtesy of Steven Engineering, Inc - (800) 258-9200 - sales@steveneng.com - www.stevenengineering.com

VM400 Series

Basic
VM430-01-00

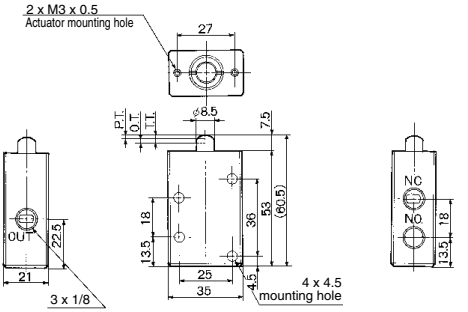

Symbol

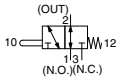

F.O.F.	26 N
P.T.	1.5 mm
O.T.	2.0 mm
T.T.	3.5 mm

Roller lever
VM430-01-01
VM430-01-01S

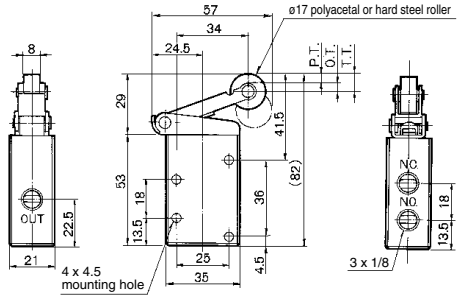

Symbol

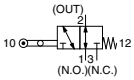

F.O.F.	12 N
P.T.	4.0 mm
O.T.	4.5 mm
T.T.	8.5 mm

One way roller lever
VM430-01-02
VM430-01-02S

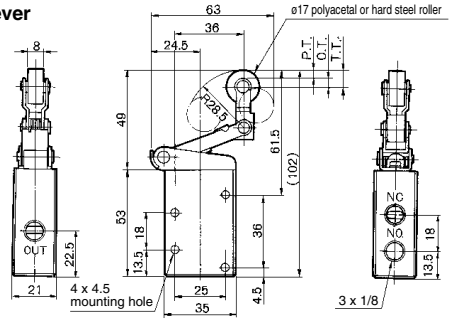

Symbol

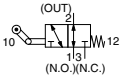

F.O.F.	11 N
P.T.	4.0 mm
O.T.	5.0 mm
T.T.	9.0 mm

Straight plunger
VM430-01-05

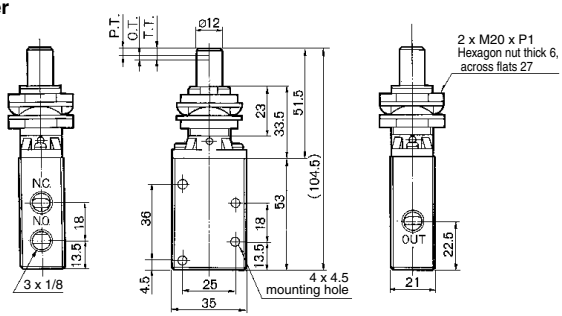

Panel mounting hole

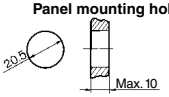

Symbol

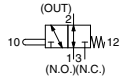

F.O.F.	30 N
P.T.	3.5 mm
O.T.	2.0 mm
T.T.	5.5 mm

SMC
Courtesy of Steven Engineering, Inc - (800) 258-9200 - sales@steveneng.com - www.stevenengineering.com

VM400 Series

Roller plunger
VM430-01-06
VM430-01-06S

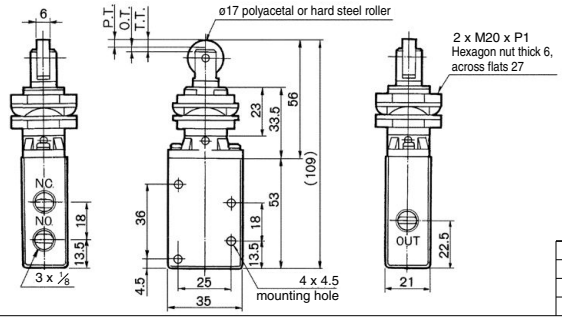

Panel mounting hole

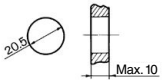

Symbol

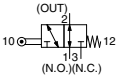

F.O.F.	30 N
P.T.	3.5 mm
O.T.	2.0 mm
T.T.	5.5 mm

Cross roller plunger
VM430-01-07
VM430-01-07S

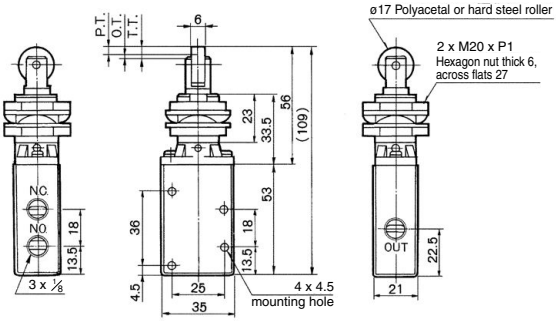

Panel mounting hole

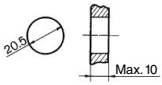

Symbol

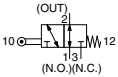

F.O.F.	30 N
P.T.	3.5 mm
O.T.	2.0 mm
T.T.	5.5 mm

Toggle lever
VM430-01-08

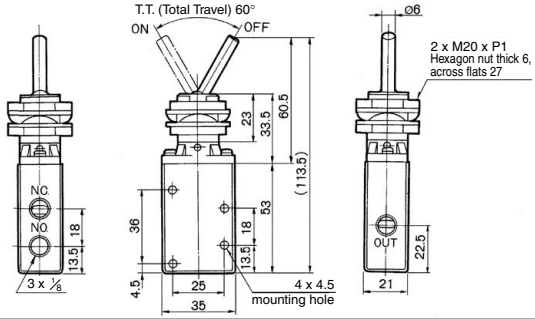

Panel mounting hole

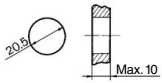

Symbol

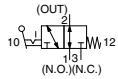

F.O.F.	7 N
T.T.	60°

Push button (Mushroom)
VM430-01-30R/B/G/Y

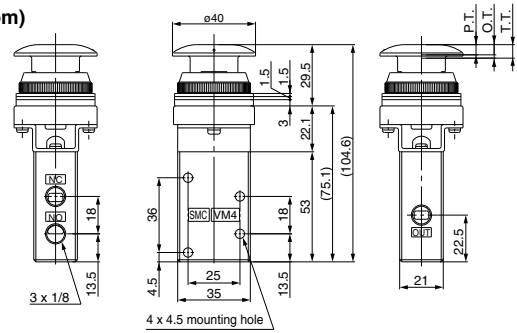

Panel mounting hole

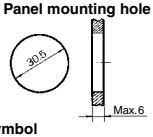

Symbol

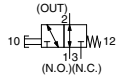

F.O.F.	26 N
P.T.	4.6 mm
O.T.	1.6 mm
T.T.	6.5 mm

Courtesy of Steven Engineering, Inc - (800) 258-9200 - sales@steveneng.com - www.stevenengineering.com

VM400 Series

Push button (Extended)
VM430-01-32R/B/G/Y

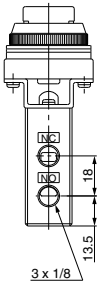

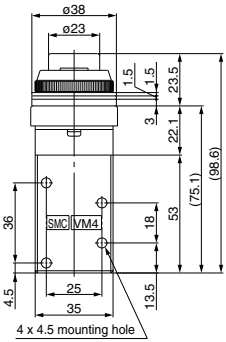

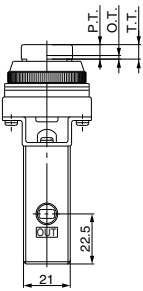

Panel mounting hole

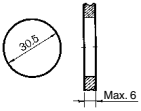

Symbol

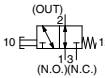

F.O.F.	26 N
P.T.	5.4 mm
O.T.	1.6 mm
T.T.	6.5 mm

Push button (Flush)
VM430-01-33

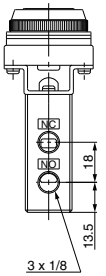

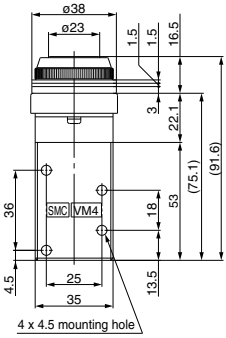

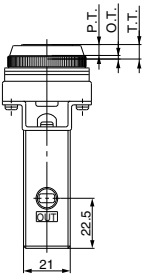

Panel mounting hole

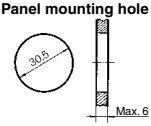

Symbol

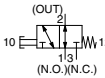

F.O.F.	26 N
P.T.	4.9 mm
O.T.	1.6 mm
T.T.	6.5 mm

Twist selector (2 position)
VM430-01-34R/B/G/Y

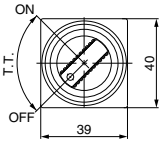

Panel mounting hole

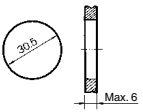

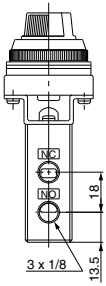

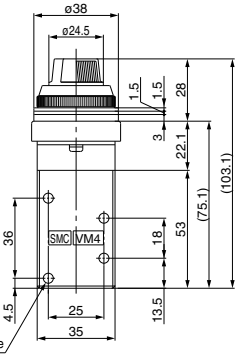

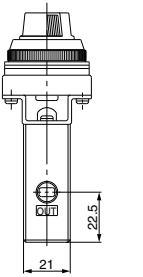

Symbol

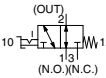

F.O.F.	20 N
T.T.	90°

SMC
Courtesy of Steven Engineering, Inc - (800) 258-9200 - sales@steveneng.com - www.stevenengineering.com

VM400 Series

Key selector (2 position)
VM430-01-36

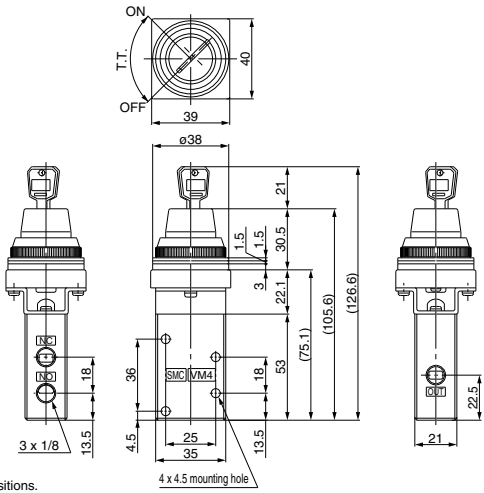

Panel mounting hole

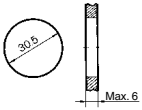

Symbol

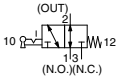

Key can be removed at the “on” and “off” positions.

F.O.F.	20 N
T.T.	90°

Courtesy of Steven Engineering, Inc - (800) 258-9200 - sales@steveneng.com - www.stevenengineering.com

3 Port Mechanical Valve: Heavy Duty Type

VM800 Series

RoHS

Sturdy construction.

Either N.C. or N.O. is available.

Piping possible to any port.

Proper countermeasures can be taken for applications in which the noise of the exhaust could cause problems to the surroundings.

Many actuator positions and orientation options.

Specifications

Fluid		Air		
Operating pressure		–100 kPa to 1.0 MPa		
Ambient and fluid temperature		–5 to 60°C (No freezing)		
Flow rate characteristics		C [dm³/(s·bar)]	b	Cv
	1 (NC) ↔ 2 (OUT)	1.4	0.2	0.29
	2 (NO) ↔ 3 (OUT)	1.4	0.15	0.29
Lubrication		Not required (Use turbine oil Class 1 ISO VG32, if lubricated.)		
Port size		1/8		

Model

Actuator	Model	Actuator part no.	Weight (g)
Basic	VM830-01-00	—	180
Roller lever	VM830-01-01	VM-01F	280
Adjustable roller lever	VM830-01-13	VM-13F	300
Adjustable rod lever	VM830-01-14	VM-14F	276

• Actuator replacement is available.

How to Order

VM8 3 0 – 01 – 01

Number of ports

3	3 port

Port size

01	Rc 1/8
N01	NPT 1/8
F01	G 1/8

Actuator type

00	Basic
01	Roller lever
13	Adjustable roller lever
14	Adjustable rod lever

Application

● Movement is changeable.

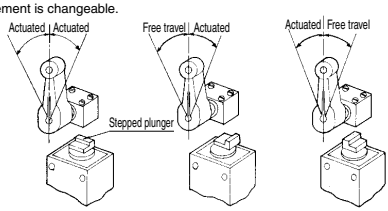

● Roller can be mounted to inside of lever.

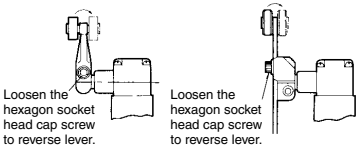

● Lever location can be changed.

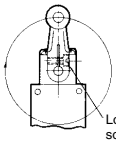

● Head direction can be changed.

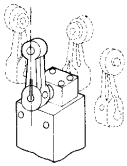

● Lever length adjustment.

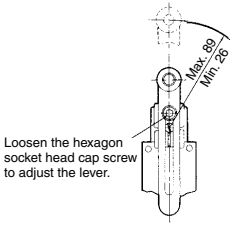

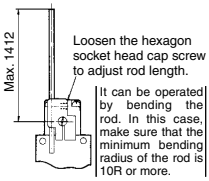

SMC

Courtesy of Steven Engineering, Inc - (800) 258-9200 - sales@steveneng.com - www.stevenengineering.com

Construction

Non-actuated **Actuated**

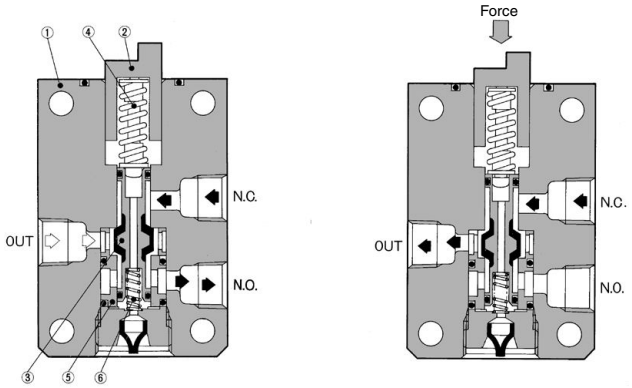

Component Parts

No.	Description	Material	Note
1	**Body**	ADC	Platinum silver
2	**Plunger**	POM	
3	**Spool valve**	Aluminum alloy, NBR	Rubber lined

No.	Description	Material	Note
4	**Over travel spring**	Stainless steel	
5	**Retainer**	Brass	
6	**Spring**	Steel	Zinc chromated

VM800 Series

Basic／VM830-01-00

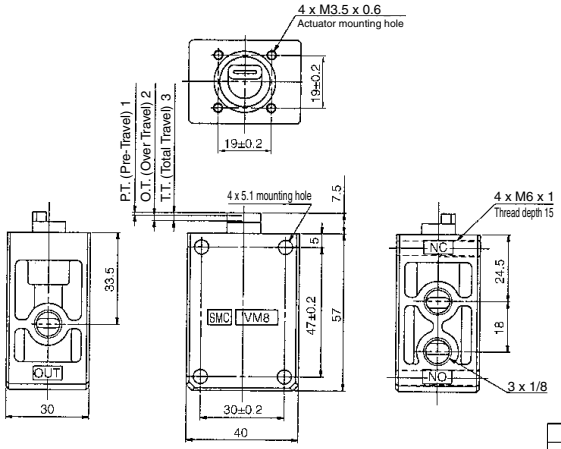

Symbol

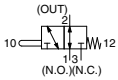

F.O.F.	23 N
P.T.	1.0 mm
O.T.	2.0 mm
T.T.	3.0 mm

Courtesy of Steven Engineering, Inc - (800) 258-9200 - sales@steveneng.com - www.stevenengineering.com

VM800 Series

Roller lever／VM830-01-01

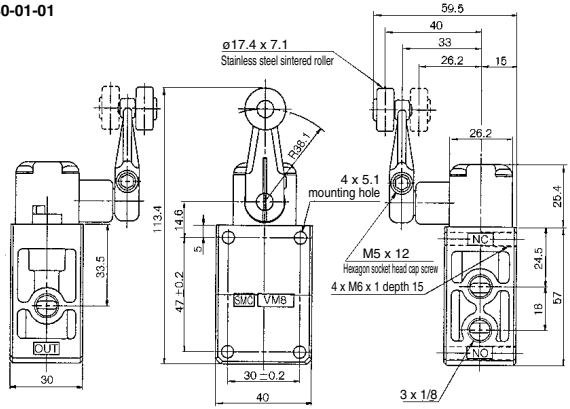

Symbol

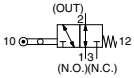

F.O.F.	20 N
P.T.	20°
O.T.	30°
T.T.	50°

Adjustable roller lever／VM830-01-13

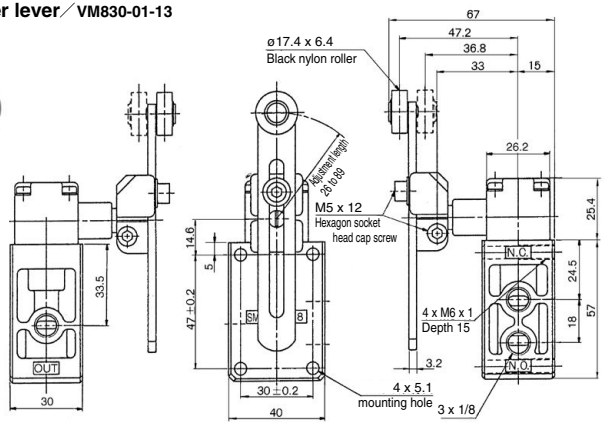

Symbol

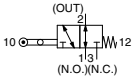

∗ At lever length 38.1 mm

F.O.F. ∗	20 N
P.T.	20°
O.T.	30°
T.T.	50°

Adjustable rod lever／VM830-01-14

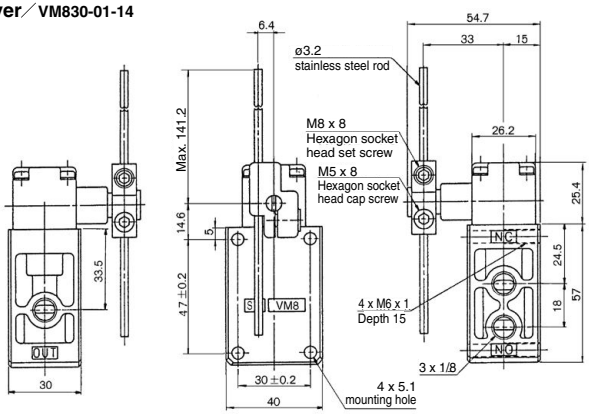

Symbol

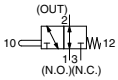

∗ At lever length 141.2 mm

F.O.F. ∗	2.3 N
P.T.	20°
O.T.	30°
T.T.	50°

SMC
Courtesy of Steven Engineering, Inc - (800) 258-9200 - sales@steveneng.com - www.stevenengineering.com

5 Port Mechanical Valve
Metal Seal
VZM400 Series

RoHS

Compact design, large flow capacity High cycle rate, long life/300 c.p.m. or less

Piping possible to any EXH port.

Proper countermeasures can be taken for applications in which the noise of the exhaust could cause problems to the surroundings.

Pilot type is selectable. (Internal pilot and external pilot)

Specifications

Fluid		Air		
Operating pressure		0.15 to 1.0 MPa (1)		
Ambient and fluid temperature		–5 to 60°C (No freezing)		
Flow rate characteristics		C[dm³/(s·bar)]	b	Cv
	1(P)→2(B)/4(A)	2.0	0.14	0.49
	2(B)/4(A)→4(EB)/5(EA)	1.7	0.25	0.44
Maximum frequency (Mechanical operation type)		300 c.p.m. or less		
Lubrication		Not required (Use turbine oil class 1 ISO VG32, if lubricated.)		
Port size		Main valve/1/8		
		Pilot valve (EXH)/M5 x 0.8		
Option		Foot bracket (2)		

Note 1) External pilot type Main valve: 0 to 1.0 MPa
Pilot valve: 0.15 to 1.0 MPa
Note 2) The standard body can not be retrofitted with a foot bracket.

Model

	Actuator	Model	Actuator part no.	Application	Weight (g)
Mechanical operation	Basic	VZM450-01-00	—	—	120
	Roller lever	VZM450-01-01	VM-01C	Polyacetal roller	160
		VZM450-01-01S	VM-01CS	Hard steel roller	170
	One way roller lever	VZM450-01-02	VM-02C	Polyacetal roller	170
		VZM450-01-02S	VM-02CS	Hard steel roller	180
	Straight plunger	VZM450-01-05	VM-05C	—	200
	Roller plunger	VZM450-01-06	VM-06C	Polyacetal roller	200
		VZM450-01-06S	VM-06CS	Hard steel roller	200
Manual operation	Toggle lever	VZM450-01-08	VM-08C	—	190
	Push button (Mushroom)	VZM450-01-30R	VM-30CR	Red	199
		VZM450-01-30B	VM-30CB	Black	
		VZM450-01-30G	VM-30CG	Green	
		VZM450-01-30Y	VM-30CY	Yellow	
	Push button (Extended)	VZM450-01-32R	VM-32CR	Red	192
		VZM450-01-32B	VM-32CB	Black	
		VZM450-01-32G	VM-32CG	Green	
		VZM450-01-32Y	VM-32CY	Yellow	
	Push button (Flush)	VZM450-01-33	VM-33C	With a set of red, black, green, yellow	197
	Twist selector (2 position)	VZM450-01-34R	VM-34CR	Red	198
		VZM450-01-34B	VM-34CB	Black	
		VZM450-01-34G	VM-34CG	Green	
		VZM450-01-34Y	VM-34CY	Yellow	
	Key selector (2 position)	VZM450-01-36	VM-36C	—	217

Note 1) Actuator replacement is available for all types.
Note 2) For push button (mushroom), push button (extended), push button (flush) and a single unit of fastening ring, refer to pages 1655 and 1656. The other parts are not replaceable.
Note 3) The handle of the selector (2 position) cannot be removed or replaced alone.

Courtesy of Steven Engineering, Inc - (800) 258-9200 - sales@steveneng.com - www.stevenengineering.com

How to Order

VZM45 0 – 01 – 01 S – ☐ – ☐

Made to Order
(Refer to pages 1648 to 1651 for details.)

X207	Alternate type, Mushroom push button
X219	Push-lock turn-reset type, Mushroom push button

Option

F	Foot bracket (Only internal pilot)

Suffix for actuator*

S	Hard steel roller	
R	Red	Color of push botton selector
B	Black	
G	Green	
Y	Yellow	

Actuator type*

00	Basic
01	Roller lever
02	One Way Roller Lever
05	Straight plunger
06	Roller plunger
08	Toggle lever
30	Push button (Mushroom)
32	Push button (Extended)
33	Push button (Flush) Note 1)
34	Twist selector (2 position)
36	Key selector (2 position)

Note 1) When selecting the flush type, it is not necessary to select the suffix for the actuator.

Port size

01	Rc 1/8
N01	NPT 1/8
F01	G 1/8

Body option

0	Internal pilot type
1	External pilot type

* **Refer to the table on page 1623 for combinations of actuator type and suffix.**

Construction

Non-actuated

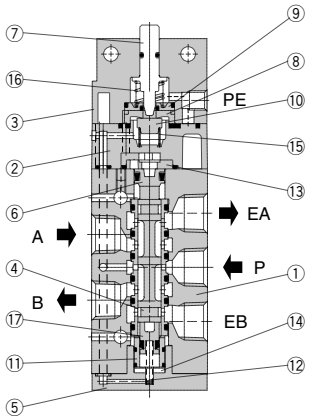

Actuated

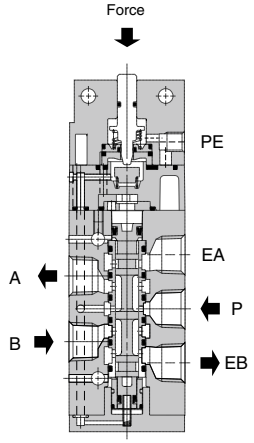

Component Parts

No.	Description	Material	Note
1	**Body**	ADC	Platinum silver
2	**Pilot body**	PBT	ZDC only for external pilot type
3	**Head cover**	ZDC	Black zinc chromated
4	**Spool/sleeve**	Stainless steel	
5	**End cover**	POM	
6	**Piston A**	POM	
7	**Plunger**	POM	
8	**Valve seat (A)**	POM	
9	**Valve seat (B)**	POM	

No.	Description	Material	Note
10	**Valve**	NBR	
11	**Piston guide B**	Aluminum alloy	
12	**Return spring**	Stainless steel	
13	**Cushion**	Rubber	
14	**Cushion**	Rubber	
15	**Valve spring**	Stainless steel	
16	**Return spring**	Stainless steel	
17	**Piston B**	POM	

SMC
Courtesy of Steven Engineering, Inc - (800) 258-9200 - sales@steveneng.com - www.stevenengineering.com

VZM400 Series

Basic／VZM450-01-00

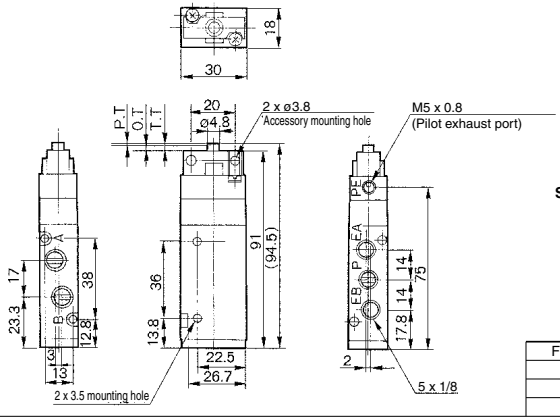

Symbol

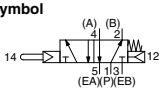

∗ 0.5 MPa supply

F.O.F. ∗	16 N
P.T.	1.0 mm
O.T.	2.0 mm
T.T.	3.0 mm

Roller lever／VZM450-01-01·VZM450-01-01S

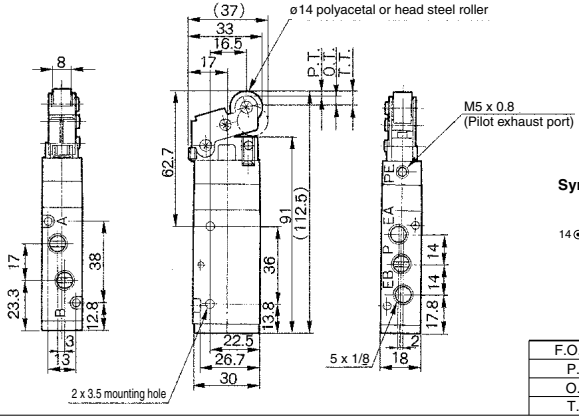

Symbol

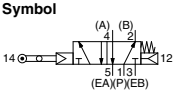

∗ 0.5 MPa supply

F.O.F. ∗	8 N
P.T.	2.2 mm
O.T.	4.0 mm
T.T.	6.2 mm

One way roller lever／VZM450-01-02·VZM450-01-02S

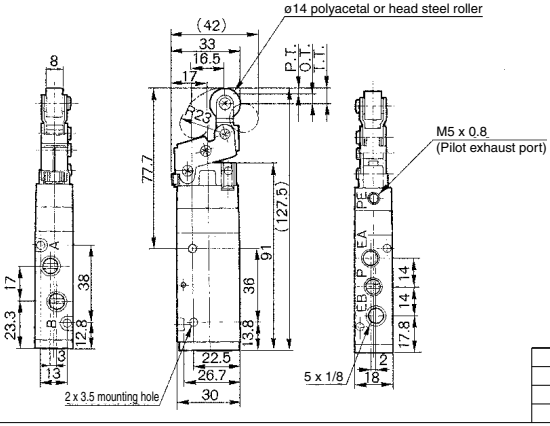

Symbol

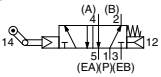

∗ 0.5 MPa supply

F.O.F. ∗	7 N
P.T.	2.4 mm
O.T.	4.6 mm
T.T.	7.0 mm

Courtesy of Steven Engineering, Inc - (800) 258-9200 - sales@steveneng.com - www.stevenengineering.com

VZM400 Series

Straight plunger／VZM450-01-05

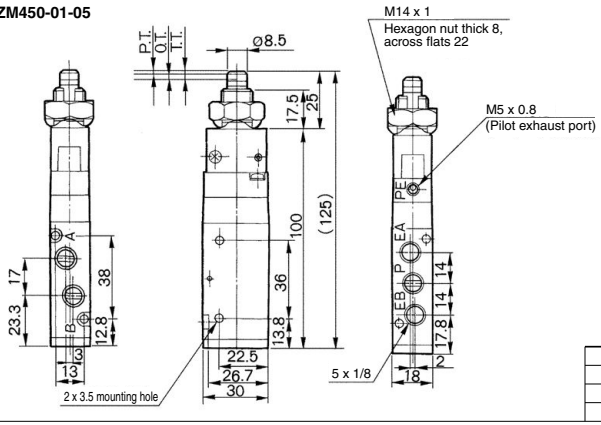

Panel mounting hole

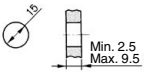

Symbol

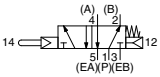

∗ 0.5 MPa supply

F.O.F. ∗	18 N
P.T.	1.5 mm
O.T.	2.0 mm
T.T.	3.5 mm

Roller plunger／VZM450-01-06·VZM450-01-06S

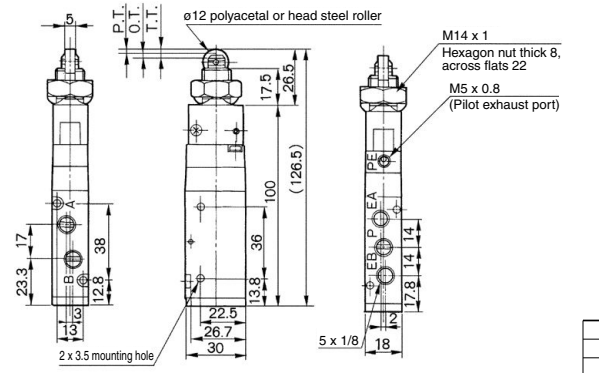

Panel mounting hole

Symbol

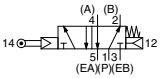

∗ 0.5 MPa supply

F.O.F. ∗	18 N
P.T.	1.5 mm
O.T.	2.0 mm
T.T.	3.5 mm

Toggle lever／VZM450-01-08

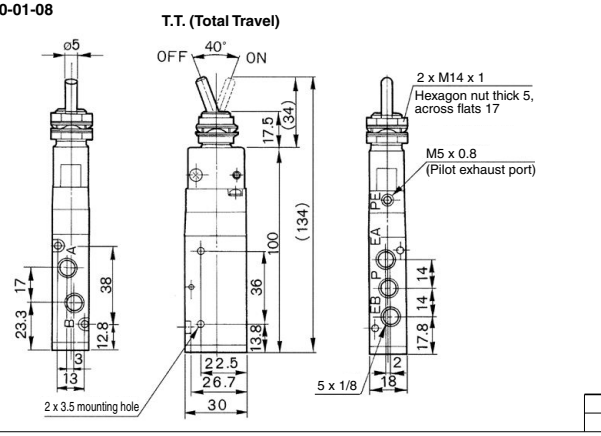

Panel mounting hole

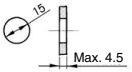

Symbol

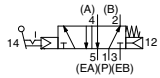

∗ 0.5 MPa supply

F.O.F. ∗	15 N
T.T.	40°

SMC
Courtesy of Steven Engineering, Inc - (800) 258-9200 - sales@steveneng.com - www.stevenengineering.com

VZM400 Series

Push button (Mushroom) / VZM450-01-30R/B/G/Y

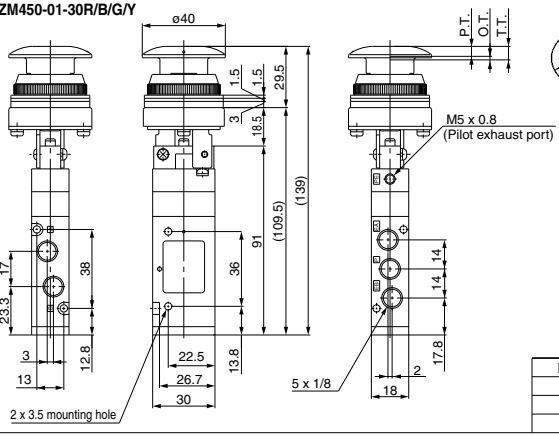

Panel mounting hole

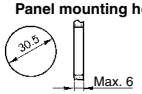

Symbol

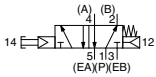

∗ 0.5 MPa supply

F.O.F. ∗	21 N
P.T.	4.8 mm
O.T.	1.7 mm
T.T.	6.5 mm

Push button (Extended) / VZM450-01-32R/B/G/Y

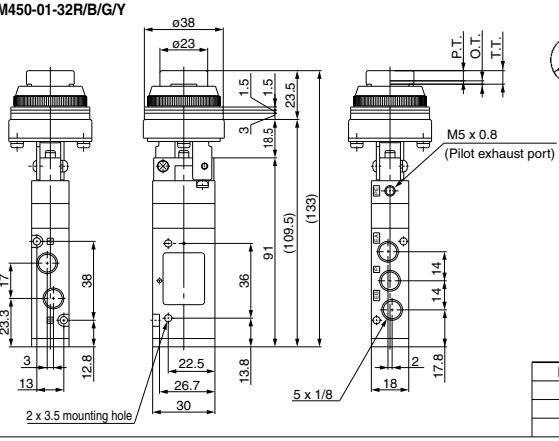

Panel mounting hole

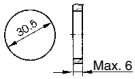

Symbol

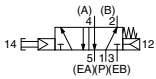

∗ 0.5 MPa supply

F.O.F. ∗	21 N
P.T.	4.8 mm
O.T.	1.7 mm
T.T.	6.5 mm

Push button (Flush) / VZM450-01-33

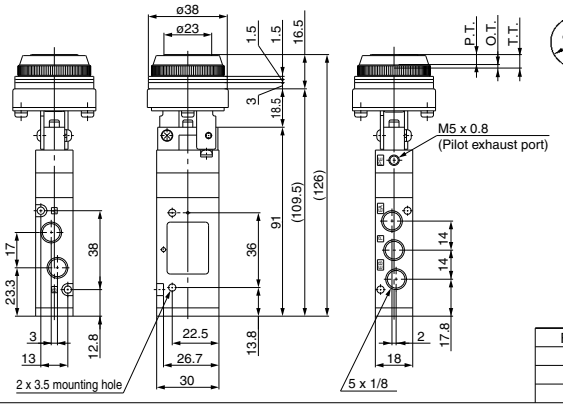

Panel mounting hole

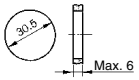

Symbol

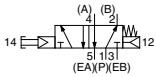

∗ 0.5 MPa supply

F.O.F. ∗	21 N
P.T.	4.8 mm
O.T.	1.7 mm
T.T.	6.5 mm

Courtesy of Steven Engineering, Inc - (800) 258-9200 - sales@steveneng.com - www.stevenengineering.com

VZM400 Series

Twist selector (2 position) / VZM450-01-34R/B/G/Y

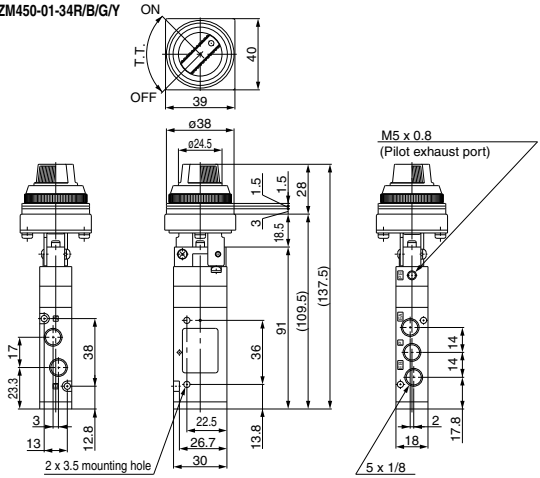

Panel mounting hole

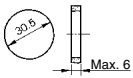

Symbol

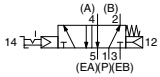

∗ 0.5 MPa supply

F.O.F. ∗	23 N
T.T.	90°

Key selector (2 position) / VZM450-01-36

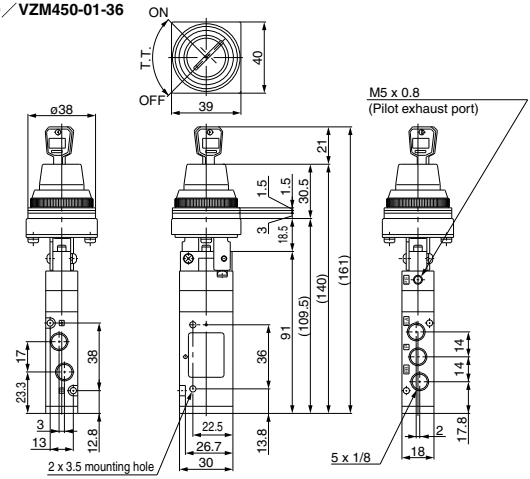

Panel mounting hole

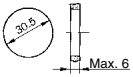

Symbol

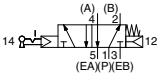

∗ 0.5 MPa supply

F.O.F. ∗	26 N
T.T.	90°

Key can be removed at the "on" and "off" positions.

External pilot type
VZM451 type

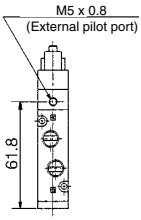

With foot bracket
VZM450-01-□□-F

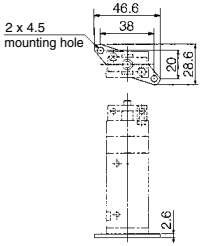

SMC
Courtesy of Steven Engineering, Inc - (800) 258-9200 - sales@steveneng.com - www.stevenengineering.com

5 Port Mechanical Valve
Rubber Seal
VZM500 Series

RoHS

Compact design, large flow capacity High cycle rate, long life/300 c.p.m. or less

Piping possible to any EXH port.

Proper countermeasures can be taken for applications in which the noise of the exhaust could cause problems to the surroundings.

Pilot type is selectable. (Internal pilot and external pilot)

Foot bracket and manifold mounting possible.

PAT.PEND.

Specifications

Fluid		Air		
Operating pressure		0.15 to 0.7 MPa (1)		
Ambient and fluid temperature		–5 to 60°C (No freezing)		
Flow rate characteristics		C[dm³/(s·bar)]	b	Cv
	1(P)→2(B)/4(A)	2.2	0.36	0.58
	2(B)/4(A)→4(R2)/5(R1)	2.4	0.34	0.63
Maximum frequency (Mechanical operation type)		300 c.p.m. or less		
Lubrication		Not required (Use turbine oil Class 1 ISO VG32, if lubricated.)		
Port size		Main valve/1/8		
		Pilot valve (EXH)/M5 x 0.8		
Option		Foot bracket (2)		

∗ Please contact SMC for manifold mounting type.
Note 1) External pilot type Main valve: 0 to 0.7 MPa
Pilot valve: 0.15 to 0.7 MPa
Note 2) The standard body can not be retrofitted with a foot bracket.

Model

	Actuator	Model	Actuator part no.	Application	Weight (g)
Mechanical operation	Basic	VZM550-01-00	—	—	110
	Roller lever	VZM550-01-01	VM-01C	Polyacetal roller	140
		VZM550-01-01S	VM-01CS	Hard steel roller	150
	One way roller lever	VZM550-01-02	VM-02C	Polyacetal roller	150
		VZM550-01-02S	VM-02CS	Hard steel roller	160
	Straight plunger	VZM550-01-05	VM-05C	—	180
	Roller plunger	VZM550-01-06	VM-06C	Polyacetal roller	180
		VZM550-01-06S	VM-06CS	Hard steel roller	180
Manual operation	Toggle lever	VZM550-01-08	VM-08C	—	170
	Push button (Mushroom)	VZM550-01-30R	VM-30CR	Red	179
		VZM550-01-30B	VM-30CB	Black	
		VZM550-01-30G	VM-30CG	Green	
		VZM550-01-30Y	VM-30CY	Yellow	
	Push button (Extended)	VZM550-01-32R	VM-32CR	Red	172
		VZM550-01-32B	VM-32CB	Black	
		VZM550-01-32G	VM-32CG	Green	
		VZM550-01-32Y	VM-32CY	Yellow	
	Push button (Flush)	VZM550-01-33	VM-33C	With a set of red, black, green, yellow	177
	Twist selector (2 position)	VZM550-01-34R	VM-34CR	Red	178
		VZM550-01-34B	VM-34CB	Black	
		VZM550-01-34G	VM-34CG	Green	
		VZM550-01-34Y	VM-34CY	Yellow	
	Key selector (2 position)	VZM550-01-36	VM-36C	—	197
	Push-pull	VZM550-01-37	—	Black	170

Note 1) Actuator replacement is available for all types. (Except push-pull)
Note 2) For push button (mushroom), push button (extended), push button (flush) and a single unit of fastening ring, refer to pages 1655 and 1656. The other parts are not replaceable.
Note 3) The handle of the selector (2 position) cannot be removed or replaced alone.

Courtesy of Steven Engineering, Inc - (800) 258-9200 - sales@steveneng.com - www.stevenengineering.com

How to Order

VZM55 [0] – [01] – [01] [S] – [ ] – [ ]

Made to Order
(Refer to pages 1648 to 1651 for details.)

X207	Alternate type, Mushroom push button
X219	Push-lock turn-reset type, Mushroom push button

Option

F	Foot bracket

Suffix for actuator*

S	Hard steel roller	
R	Red	Color of push button selector
B	Black	
G	Green	
Y	Yellow	

Actuator type*

00	Basic
01	Roller lever
02	One way roller lever
05	Straight plunger
06	Roller plunger
08	Toggle lever
30	Push button (Mushroom)
32	Push button (Extended)
33	Push button (Flush) Note 1)
34	Twist selector (2 position)
36	Key selector (2 position)
37	Push-pull

Note 1) When selecting the flush type, it is not necessary to select the suffix for the actuator.

Port size

01	Rc 1/8
N01	NPT 1/8
F01	G 1/8

Body option

0	Standard
1 *	External pilot type

* Except VZM550-01-37

* **Refer to the table on page 1529 for combinations of actuator type and suffix.**

Construction

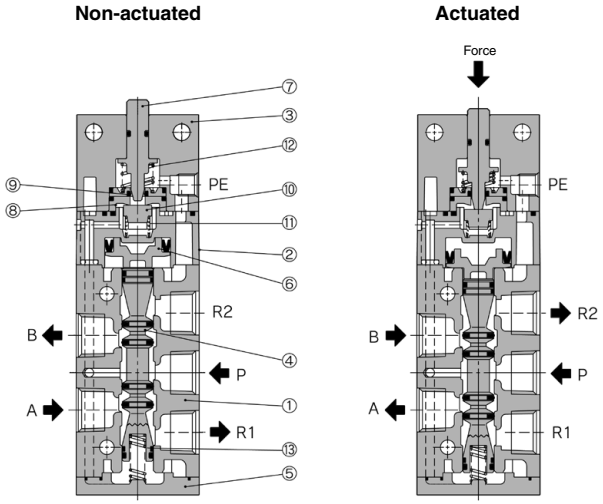

Component Parts

No.	Description	Material	Note
1	**Body**	ADC	Platinum silver
2	**Pilot body**	PBT	ZDC only for external pilot type
3	**Head cover**	ZDC	Black zinc chromated
4	**Spool valve assembly**		
5	**End cover**	ZDC	Matt-black
6	**Piston**	POM	
7	**Plunger**	POM	

No.	Description	Material	Note
8	**Valve seat (A)**	POM	
9	**Valve seat (B)**	POM	
10	**Valve assembly**	NBR	
11	**Valve spring**	Stainless steel	
12	**Return spring**	Stainless steel	
13	**Spool spring**	Stainless steel	

SMC
Courtesy of Steven Engineering, Inc - (800) 258-9200 - sales@steveneng.com - www.stevenengineering.com

VZM500 Series

Basic
VZM550-01-00

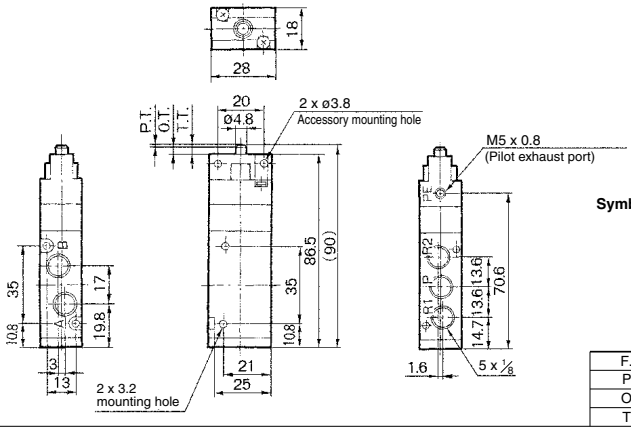

Symbol

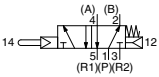

∗ 0.5 MPa supply

F.O.F. ∗	16 N
P.T.	1.0 mm
O.T.	2.0 mm
T.T.	3.0 mm

Roller lever
VZM550-01-01
VZM550-01-01S

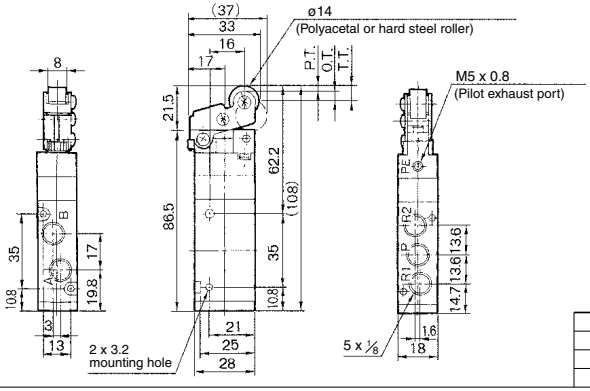

Symbol

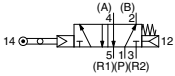

∗ 0.5 MPa supply

F.O.F. ∗	8 N
P.T.	2.2 mm
O.T.	4.0 mm
T.T.	6.2 mm

One way roller lever
VZM550-01-02
VZM550-01-02S

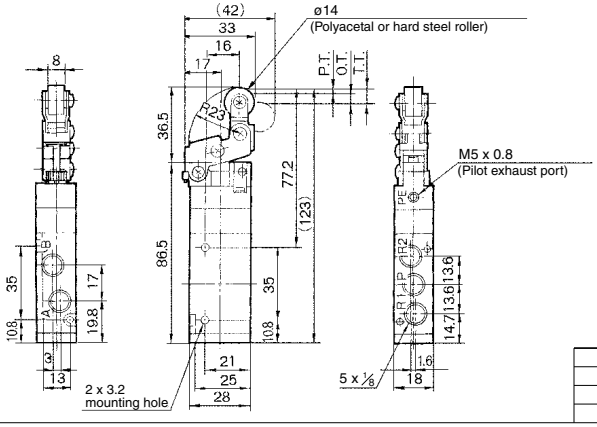

Symbol

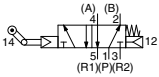

∗ 0.5 MPa supply

F.O.F. ∗	7 N
P.T.	2.4 mm
O.T.	4.6 mm
T.T.	7.0 mm

Courtesy of Steven Engineering, Inc - (800) 258-9200 - sales@steveneng.com - www.stevenengineering.com

VZM500 Series

Straight plunger
VZM550-01-05

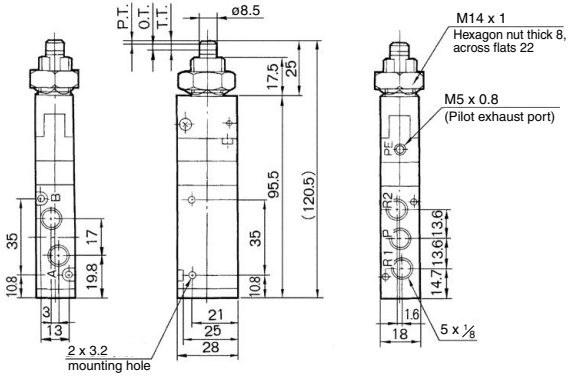

Panel mounting hole

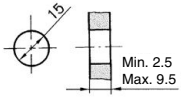

Symbol

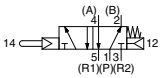

∗ 0.5 MPa supply

F.O.F. ∗	18 N
P.T.	1.5 mm
O.T.	2.0 mm
T.T.	3.5 mm

Roller plunger
VZM550-01-06
VZM550-01-06S

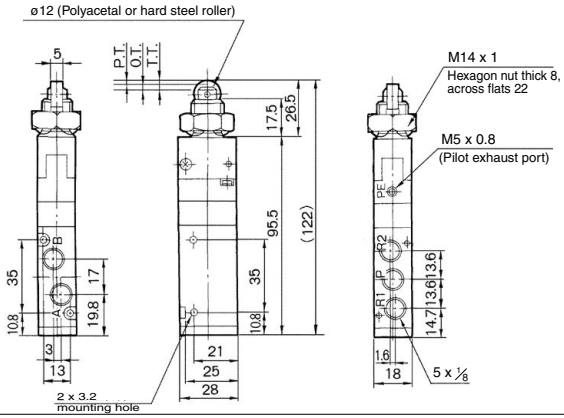

Panel mounting hole

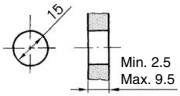

Symbol

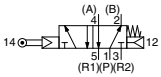

∗ 0.5 MPa supply

F.O.F. ∗	18 N
P.T.	1.5 mm
O.T.	2.0 mm
T.T.	3.5 mm

Toggle lever
VZM550-01-08

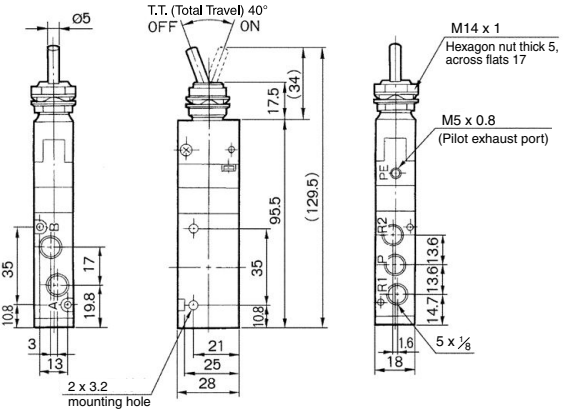

Panel mounting hole

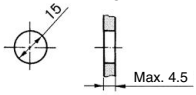

Symbol

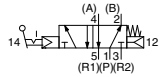

∗ 0.5 MPa supply

F.O.F. ∗	15 N
T.T.	40°

SMC
Courtesy of Steven Engineering, Inc - (800) 258-9200 - sales@steveneng.com - www.stevenengineering.com

VZM500 Series

Push button (Mushroom)
VZM550-01-30R/B/G/Y

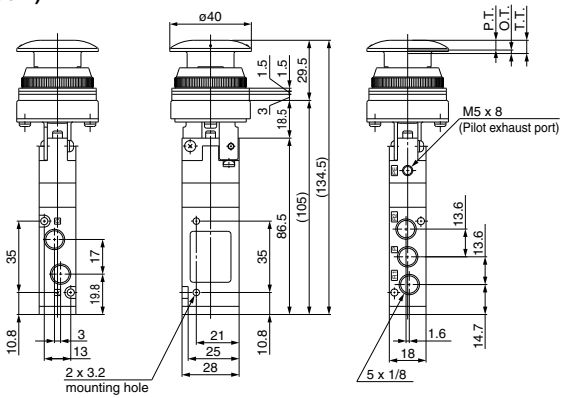

Panel mounting hole

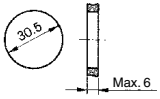

Symbol

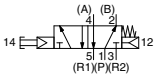

∗ 0.5 MPa supply

F.O.F. ∗	21 N
P.T.	4.8 mm
O.T.	1.7 mm
T.T.	6.5 mm

Push button (Extended)
VZM550-01-32R/B/G/Y

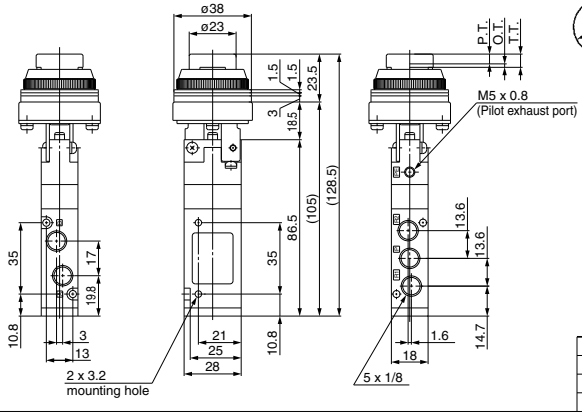

Panel mounting hole

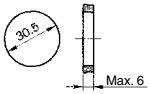

Symbol

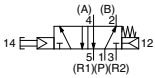

∗ 0.5 MPa supply

F.O.F. ∗	21 N
P.T.	4.8 mm
O.T.	1.7 mm
T.T.	6.5 mm

Push button (Flush)
VZM550-01-33

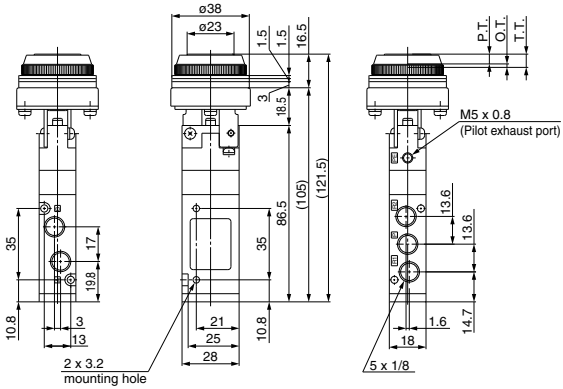

Panel mounting hole

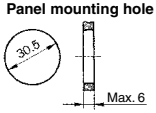

Symbol

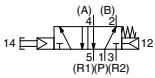

∗ 0.5 MPa supply

F.O.F. ∗	21 N
P.T.	4.8 mm
O.T.	1.7 mm
T.T.	6.5 mm

Courtesy of Steven Engineering, Inc - (800) 258-9200 - sales@steveneng.com - www.stevenengineering.com

VZM500 Series

Selector (2 position)
VZM550-01-34R/B/G/Y

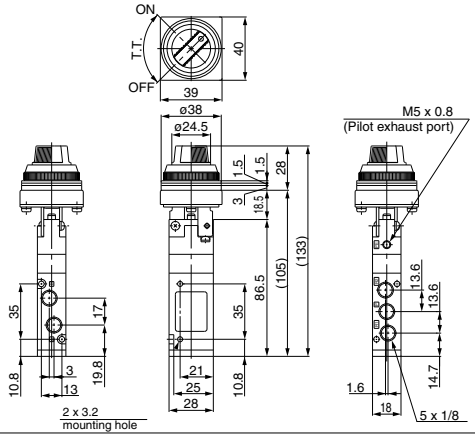

Panel mounting hole

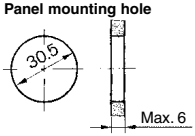

Symbol

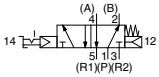

∗ 0.5 MPa supply

F.O.F. ∗	23 N
T.T.	90°

Key selector (2 position)
VZM550-01-36

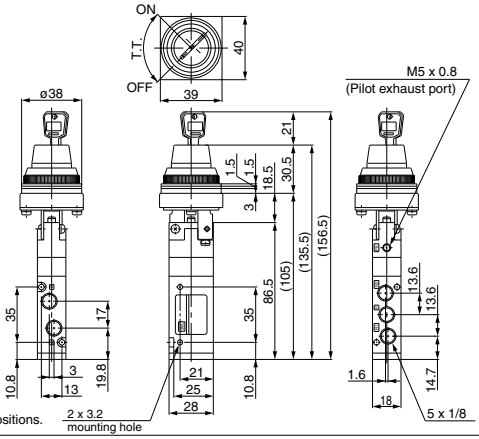

Key can be removed at the "on" and "off" positions.

Panel mounting hole

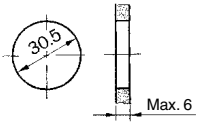

Symbol

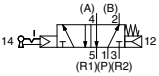

∗ 0.5 MPa supply

F.O.F. ∗	26 N
T.T.	90°

Push pull
VZM550-01-37

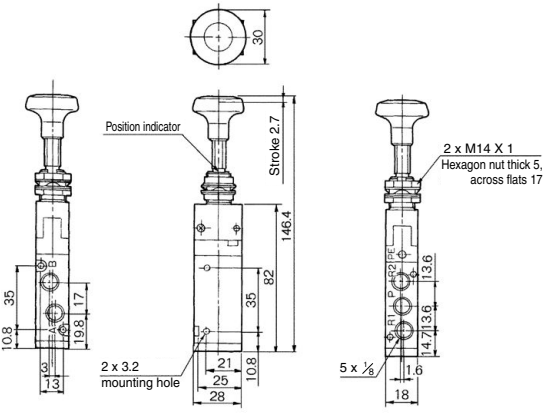

Panel mounting hole

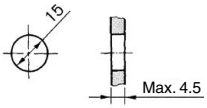

Symbol

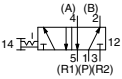

F.O.F.	20 N
T.T.	2.7 mm

SMC
Courtesy of Steven Engineering, Inc - (800) 258-9200 - sales@steveneng.com - www.stevenengineering.com

External pilot type
VZM551 type

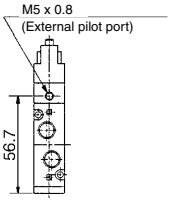

With foot bracket
VZM55□-01-□□-F

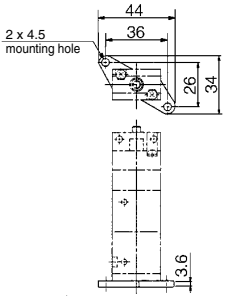

Courtesy of Steven Engineering, Inc - (800) 258-9200 - sales@steveneng.com - www.stevenengineering.com

5 Port Mechanical Valve Rubber Seal
VFM300 Series

RoHS

Compact design, large flow capacity High cycle rate, long life/300 c.p.m. or less

Piping possible to any EXH port.

Proper countermeasures can be taken for applications in which the noise of the exhaust could cause problems to the surroundings.

Pilot type is selectable. (Internal pilot and external pilot)

Specifications

Fluid		Air		
Operating pressure		0.15 to 0.9 MPa (1)		
Ambient and fluid temperature		–5 to 60°C (No freezing)		
Flow rate characteristics		C[dm³/(s·bar)]	b	Cv
	1(P)→2(C2)/4(C1)	4.0	0.36	1.0
	2(C2)/4(C1)→3(E2)/5(E1)	3.1	0.32	0.75
Maximum frequency (Mechanical operation type)		300 c.p.m. or less		
Lubrication		Not required (Use turbine oil Class 1 ISO VG32, if lubricated.)		
Port size		Main valve/1P, 4A, 2B port 1/4, 5EA/3EB port 1/8		
		Pilot valve (EXH)/M5 x 0.8		
Option		Foot bracket (2)		

Note 1) External pilot type Main valve: 0 to 0.9 MPa
Pilot valve: 0.15 to 0.9 MPa
Note 2) The standard body can not be retrofitted with a foot bracket.

Model

	Actuator	Model	Actuator part no.	Application	Weight (g)
Mechanical operation	Basic	VFM350-02-00	—	—	190
	Roller lever	VFM350-02-01	VM-01C	Polyacetal roller	270
		VFM350-02-01S	VM-01CS	Hard steel roller	280
	One way roller lever	VFM350-02-02	VM-02C	Polyacetal roller	280
		VFM350-02-02S	VM-02CS	Hard steel roller	290
	Straight plunger	VFM350-02-05	VM-05D	—	380
	Roller plunger	VFM350-02-06	VM-06D	Polyacetal roller	370
		VFM350-02-06S	VM-06DS	Hard steel roller	380
Manual operation	Toggle lever	VFM350-02-08	VM-08D	—	360
	Push button (Mushroom)	VFM350-02-30R	VM-30CR	Red	309
		VFM350-02-30B	VM-30CB	Black	
		VFM350-02-30G	VM-30CG	Green	
		VFM350-02-30Y	VM-30CY	Yellow	
	Push button (Extended)	VFM350-02-32R	VM-32CR	Red	302
		VFM350-02-32B	VM-32CB	Black	
		VFM350-02-32G	VM-32CG	Green	
		VFM350-02-32Y	VM-32CY	Yellow	
	Push button (Flush)	VFM350-02-33	VM-33C	With a set of red, black, green, yellow	307
	Twist selector (2 position)	VFM350-02-34R	VM-34CR	Red	308
		VFM350-02-34B	VM-34CB	Black	
		VFM350-02-34G	VM-34CG	Green	
		VFM350-02-34Y	VM-34CY	Yellow	
	Key selector (2 position)	VFM350-02-36	VM-36C	—	327

Note 1) Actuator replacement is available for all types.
Note 2) For push button (mushroom), push button (extended), push button (flush) and a single unit of fastening ring, refer to pages 1655 and 1656. The other parts are not replaceable.
Note 3) The handle of the selector (2 position) cannot be removed or replaced alone.

SMC

Courtesy of Steven Engineering, Inc - (800) 258-9200 - sales@steveneng.com - www.stevenengineering.com

How to Order

VFM35 [0] – [02] – [01] [S] – [ ] – [ ]

Made to Order
(Refer to pages 1648 to 1651 for details.)

X207	Alternate type, Mushroom push button
X219	Push-lock turn-reset type, Mushroom push button

Option

F	Foot bracket (Only internal pilot)

Suffix for actuator*

S	Hard steel roller	
R	Red	Color of push button selector
B	Black	
G	Green	
Y	Yellow	

Actuator type*

00	Basic
01	Roller lever
02	One way roller lever
05	Straight plunger
06	Roller plunger
08	Toggle lever
30	Push button (Mushroom)
32	Push button (Extended)
33	Push button (Flush) Note 1)
34	Twist selector (2 position)
36	Key selector (2 position)

Note 1) When selecting the flush type, it is not necessary to select the suffix for the actuator.

Port size

02	Rc 1/4
N02	NPT 1/4
F02	G 1/4

Body option

0	Internal pilot type
1	External pilot type

* **Refer to the table on page 1636 for combinations of actuator type and suffix.**

Construction

Non-actuated **Actuated**

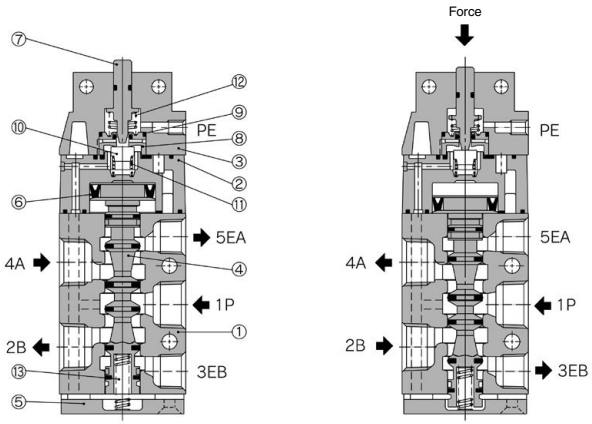

Component Parts

No.	Description	Material	Note
1	**Body**	ADC	Platinum silver
2	**Pilot body**	PBT	ZDC only for external pilot type
3	**Head cover**	ZDC	Black zinc chromated
4	**Spool valve assembly**		
5	**End cover**	ADC	Matt-black
6	**Piston**	POM	
7	**Plunger**	POM	

No.	Description	Material	Note
8	**Valve seat (A)**	POM	
9	**Valve seat (B)**	POM	
10	**Valve**	NBR	
11	**Valve spring**	Stainless steel	
12	**Return spring**	Stainless steel	
13	**Spool spring**	Stainless steel	

Courtesy of Steven Engineering, Inc - (800) 258-9200 - sales@steveneng.com - www.stevenengineering.com

VFM300 Series

Basic
VFM350-02-00

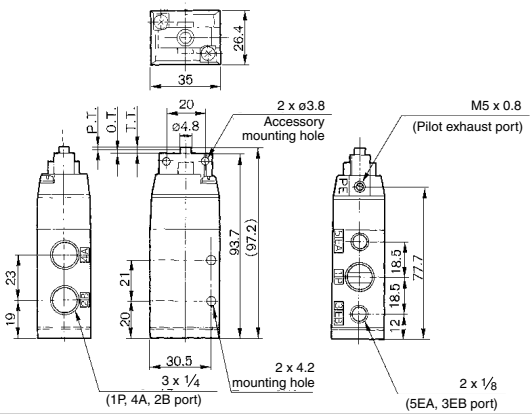

Symbol

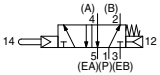

∗ 0.5 MPa supply

F.O.F. ∗	16 N
P.T.	1.0 mm
O.T.	2.0 mm
T.T.	3.0 mm

Roller lever
VFM350-02-01
VFM350-02-01S

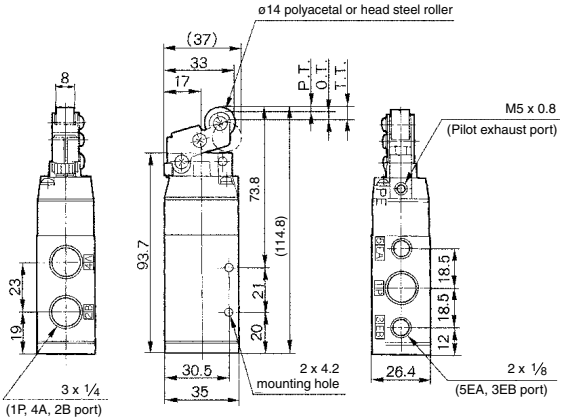

Symbol

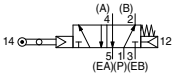

∗ 0.5 MPa supply

F.O.F. ∗	8 N
P.T.	2.2 mm
O.T.	4.0 mm
T.T.	6.2 mm

One way roller lever
VFM350-02-02
VFM350-02-02S

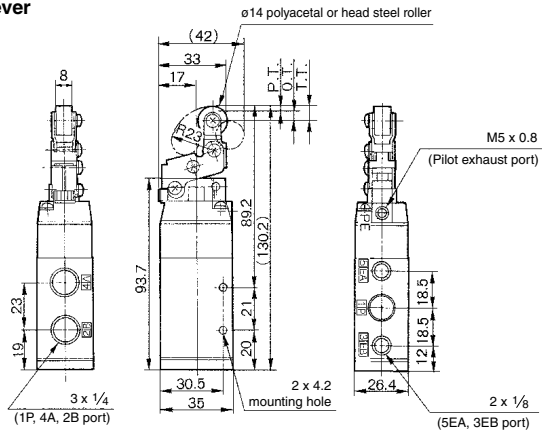

Symbol

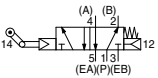

∗ 0.5 MPa supply

F.O.F. ∗	7 N
P.T.	2.4 mm
O.T.	4.6 mm
T.T.	7.0 mm

SMC
Courtesy of Steven Engineering, Inc - (800) 258-9200 - sales@steveneng.com - www.stevenengineering.com

VFM300 Series

Straight plunger
VFM350-02-05

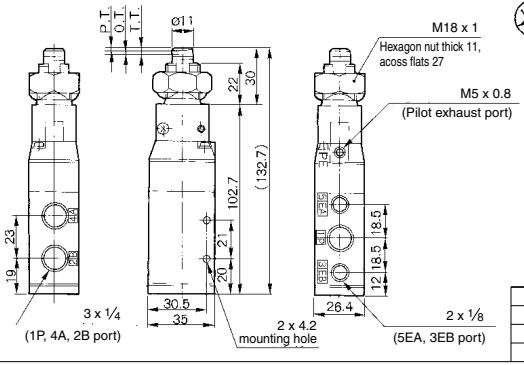

Panel mounting hole

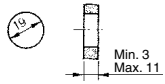

Symbol

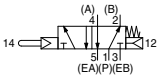

∗ 0.5 MPa supply

F.O.F. ∗	20 N
P.T.	1.5 mm
O.T.	2.0 mm
T.T.	3.5 mm

Roller plunger
VFM350-02-06
VFM350-02-06S

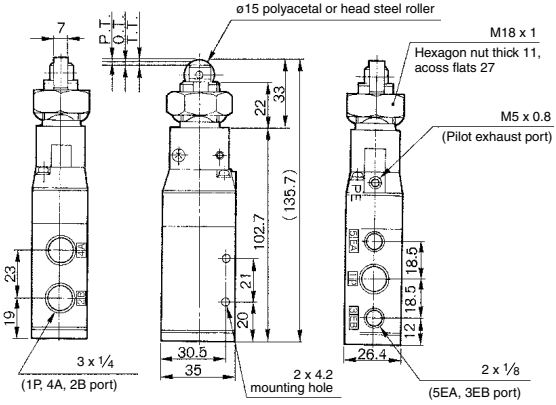

Panel mounting hole

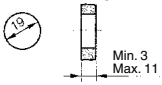

Symbol

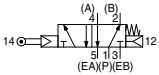

∗ 0.5 MPa supply

F.O.F. ∗	20 N
P.T.	1.5 mm
O.T.	2.0 mm
T.T.	3.5 mm

Toggle lever
VFM350-02-08

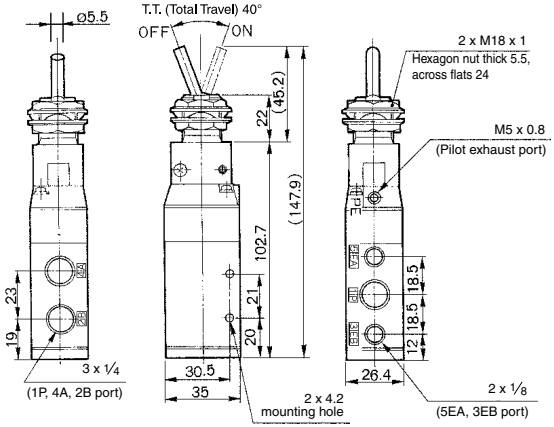

Panel mounting hole

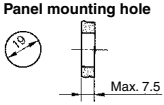

Symbol

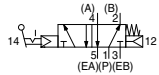

∗ 0.5 MPa supply

F.O.F. ∗	15 N
T.T.	40°

Courtesy of Steven Engineering, Inc - (800) 258-9200 - sales@steveneng.com - www.stevenengineering.com

VFM300 Series

Push button (Mushroom)
VFM350-02-30R/B/G/Y

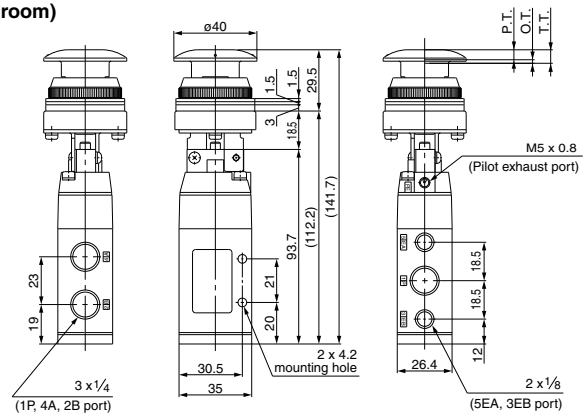

Panel mounting hole

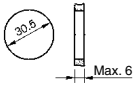

Symbol

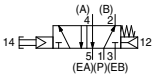

∗ 0.5 MPa supply

F.O.F. ∗	21 N
P.T.	4.8 mm
O.T.	1.7 mm
T.T.	6.5 mm

Push button (Extended)
VFM350-02-32R/B/G/Y

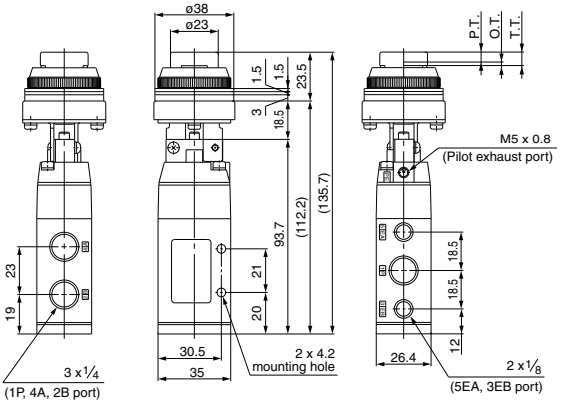

Panel mounting hole

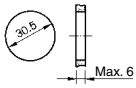

Symbol

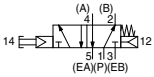

∗ 0.5 MPa supply

F.O.F. ∗	21 N
P.T.	4.8 mm
O.T.	1.7 mm
T.T.	6.5 mm

Push button (Flush)
VFM350-02-33

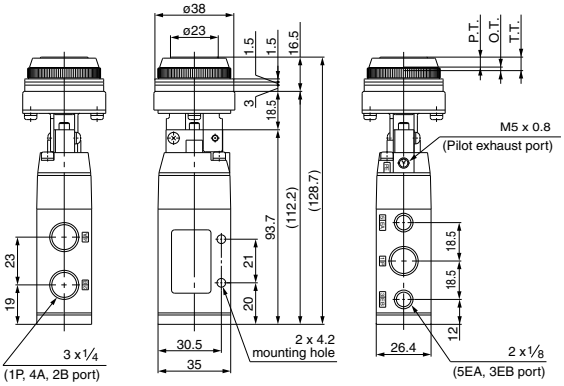

Panel mounting hole

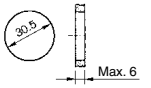

Symbol

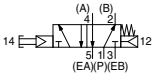

∗ 0.5 MPa supply

F.O.F. ∗	21 N
P.T.	4.8 mm
O.T.	1.7 mm
T.T.	6.5 mm

SMC
Courtesy of Steven Engineering, Inc - (800) 258-9200 - sales@steveneng.com - www.stevenengineering.com

VFM300 Series

Twist selector (2 position)
VFM350-02-34R/B/G/Y

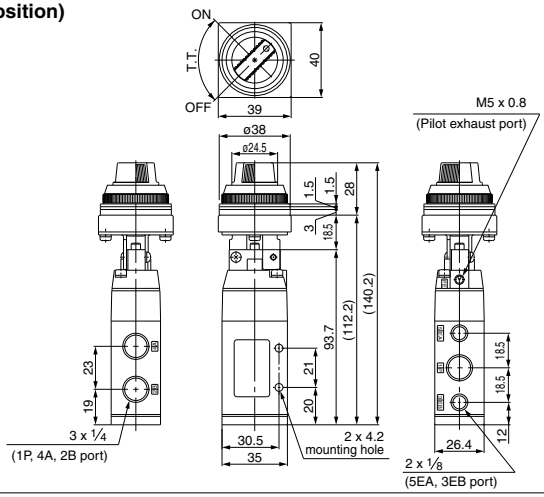

Panel mounting hole

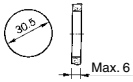

Symbol

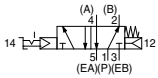

∗ 0.5 MPa supply

F.O.F. ∗	23 N
T.T.	90°

Key selector (2 position)
VFM350-02-36

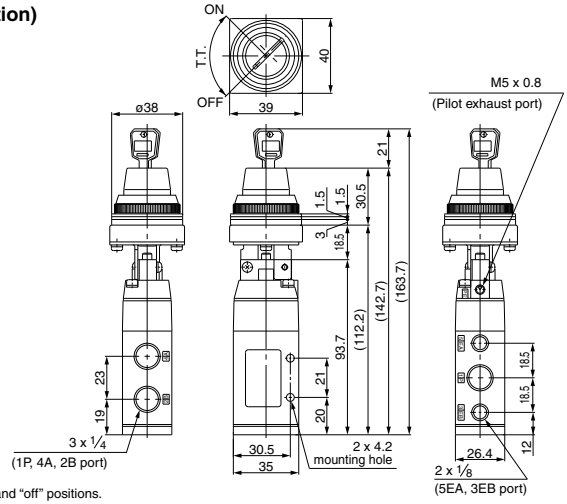

Panel mounting hole

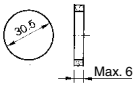

Symbol

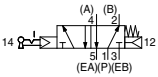

∗ 0.5 MPa supply

F.O.F. ∗	26 N
T.T.	90°

Key can be removed at the "on" and "off" positions.

External pilot type
VFM351 type

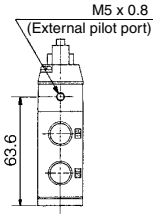

With foot bracket
VFM350-02-□□-F

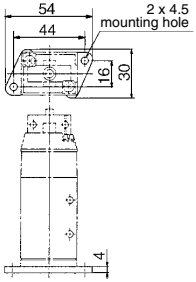

Courtesy of Steven Engineering, Inc - (800) 258-9200 - sales@steveneng.com - www.stevenengineering.com

5 Port Mechanical Valve
Metal Seal
VFM200 Series

RoHS

Compact design, large flow capacity High cycle rate, long life/300 c.p.m. or less

Piping possible to any EXH port.

Proper countermeasures can be taken for applications in which the noise of the exhaust could cause problems to the surroundings.

Pilot type is selectable. (Internal pilot and external pilot)

Specifications

Fluid		Air		
Operating pressure		0.1 to 1.0 MPa (1)		
Ambient and fluid temperature		–5 to 60°C (No freezing)		
Flow rate characteristics		C[dm³/(s·bar)]	b	Cv
	1(P)→2(B)/4(A)	4.0	0.2	0.9
	2(B)/4(A)→4(EB)/5(EA)	3.5	0.32	0.85
Maximum frequency (Mechanical operation type)		300 c.p.m. or less		
Lubrication		Not required (Use turbine oil Class 1 ISO VG32, if lubricated.)		
Port size		Main valve Rc 1/4		
		Pilot valve (EXH)/M5 x 0.8		
Option		Foot bracket (2)		

Note 1) External pilot type Main valve: 0 to 1.0 MPa
Pilot valve: 0.1 to 1.0 MPa
Note 2) The bracket can not be retrofitted later.

Model

	Actuator	Model	Actuator part no.	Application	Weight (g)
Mechanical operation	Basic	VFM250-02-00	—	—	300
	Roller lever	VFM250-02-01	VM-01C	Polyacetal roller	310
		VFM250-02-01S	VM-01CS	Hard steel roller	320
	One way roller lever	VFM250-02-02	VM-02C	Polyacetal roller	320
		VFM250-02-02S	VM-02CS	Hard steel roller	330
	Straight plunger	VFM250-02-05	VM-05D	—	420
	Roller plunger	VFM250-02-06	VM-06D	Polyacetal roller	410
		VFM250-02-06S	VM-06DS	Hard steel roller	420
Manual operation	Toggle lever	VFM250-02-08	VM-08D	—	400
	Push button (Mushroom)	VFM250-02-30R	VM-30CR	Red	349
		VFM250-02-30B	VM-30CB	Black	
		VFM250-02-30G	VM-30CG	Green	
		VFM250-02-30Y	VM-30CY	Yellow	
	Push button (Extended)	VFM250-02-32R	VM-32CR	Red	342
		VFM250-02-32B	VM-32CB	Black	
		VFM250-02-32G	VM-32CG	Green	
		VFM250-02-32Y	VM-32CY	Yellow	
	Push button (Flush)	VFM250-02-33	VM-33C	With a set of red, black, green, yellow	347
	Twist selector (2 position)	VFM250-02-34R	VM-34CR	Red	348
		VFM250-02-34B	VM-34CB	Black	
		VFM250-02-34G	VM-34CG	Green	
		VFM250-02-34Y	VM-34CY	Yellow	
	Key selector (2 position)	VFM250-02-36	VM-36C	—	367

Note 1) Actuator replacement is available for all types.
Note 2) For push button (mushroom), push button (extended), push button (flush) and a single unit of fastening ring, refer to pages 1655 and 1656. The other parts are not replaceable.
Note 3) The handle of the selector (2 position) cannot be removed or replaced alone.

SMC
Courtesy of Steven Engineering, Inc - (800) 258-9200 - sales@steveneng.com - www.stevenengineering.com

How to Order

VFM25 [0] – [02] – [01] [S] – [ ] – [ ]

Made to Order
(Refer to pages 1648 to 1651 for details.)

X207	Alternate type, Mushroom push button
X219	Push-lock turn-reset type, Mushroom push button

Option

F	Foot bracket (Only internal pilot)

Suffix for actuator*

S	Hard steel roller	
R	Red	Color of push button selector
B	Black	
G	Green	
Y	Yellow	

Actuator type*

00	Basic
01	Roller lever
02	One way roller lever
05	Straight plunger
06	Roller plunger
08	Toggle lever
30	Push button (Mushroom)
32	Push button (Extended)
33	Push button (Flush) Note 1)
34	Twist selector (2 position)
36	Key selector (2 position)

Port size

02	Rc 1/4

Body option

0	Internal pilot type
1	External pilot type

* **Refer to the table on page 1642 for combinations of actuator type and suffix.**

Note 1) When selecting the flush type, it is not necessary to select the suffix for the actuator.

Construction

Non-actuated **Actuated**

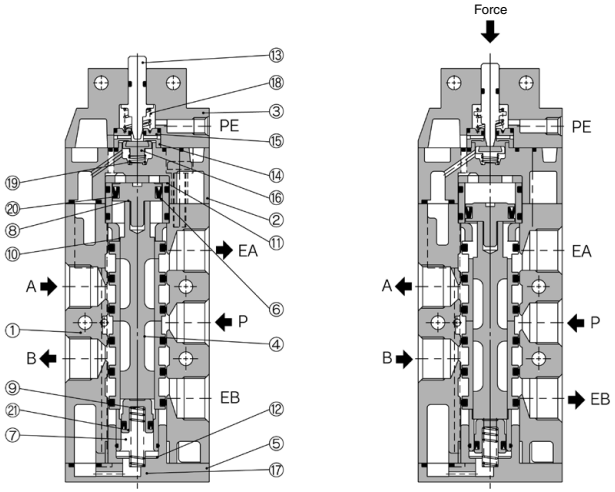

Component Parts

No.	Description	Material	Note
1	**Body**	ADC	Platinum silver
2	**Pilot body**	ZDC	Platinum silver
3	**Head cover**	ZDC	Black zinc chromated
4	**Spool/sleeve**	Stainless steel	
5	**End cover**	POM	
6	**Piston guide**	Brass	
7	**Piston guide for end cover**	Brass	
8	**Piston**	POM	
9	**Piston for end cover**	POM	
10	**Guide bushing**	POM	
11	**Cushion**	Urethane rubber	

No.	Description	Material	Note
12	**Cushion for end cover**	Urethane rubber	
13	**Plunger**	Stainless steel	
14	**Valve seat (A)**	POM	
15	**Valve seat (B)**	POM	
16	**Valve**	NBR	
17	**Return spring**	Stainless steel	
18	**Return spring**	Stainless steel	
19	**Valve spring**	Stainless steel	
20	**Mini Y packing**	NBR	
21	**Mini Y packing**	NBR	

Courtesy of Steven Engineering, Inc - (800) 258-9200 - sales@steveneng.com - www.stevenengineering.com

VFM200 Series

Basic
VFM250-02-00

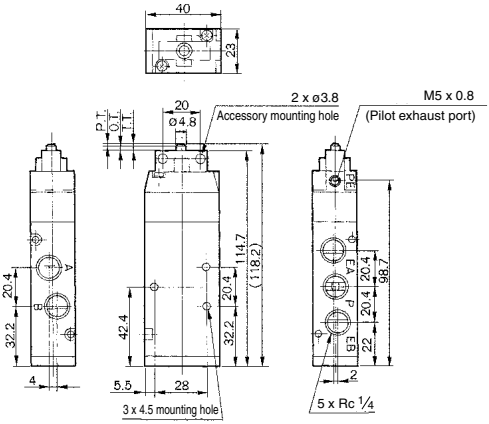

Symbol

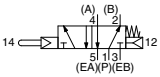

∗ 0.5 MPa supply

F.O.F. ∗	16 N
P.T.	1.0 mm
O.T.	2.0 mm
T.T.	3.0 mm

Roller lever
VFM250-02-01
VFM250-02-01S

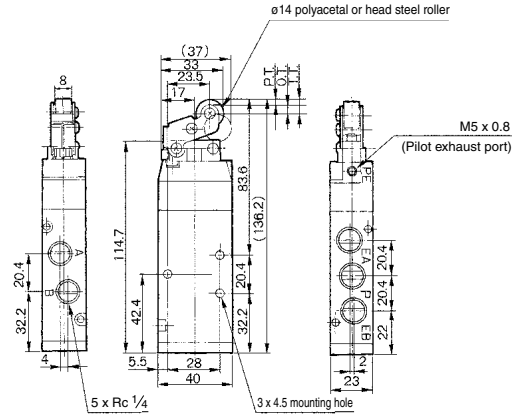

Symbol

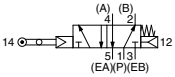

∗ 0.5 MPa supply

F.O.F. ∗	8 N
P.T.	2.2 mm
O.T.	4.0 mm
T.T.	6.2 mm

One way roller lever
VFM250-02-02
VFM250-02-02S

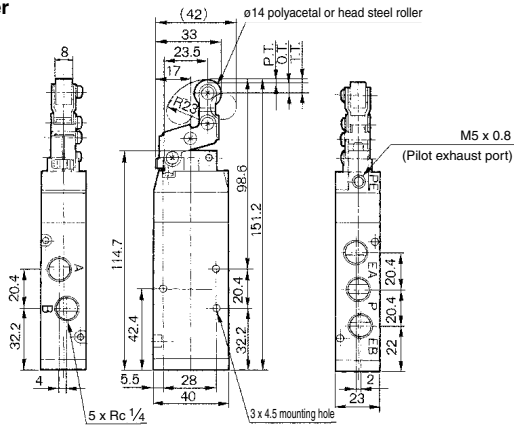

Symbol

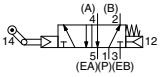

∗ 0.5 MPa supply

F.O.F. ∗	7 N
P.T.	2.4 mm
O.T.	4.6 mm
T.T.	7.0 mm

SMC
Courtesy of Steven Engineering, Inc - (800) 258-9200 - sales@steveneng.com - www.stevenengineering.com

VFM200 Series

Straight plunger
VFM250-02-05

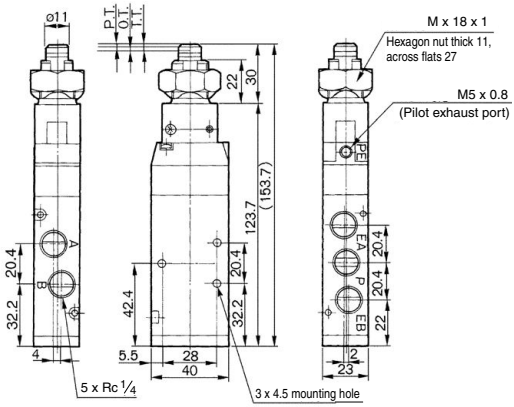

Panel mounting hole

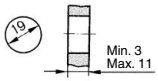

Symbol

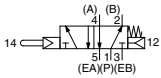

∗ 0.5 MPa supply

F.O.F. ∗	20 N
P.T.	1.5 mm
O.T.	2.0 mm
T.T.	3.5 mm

Roller plunger
VFM250-02-06
VFM250-02-06S

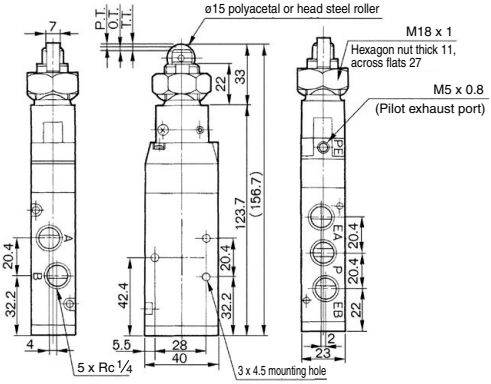

Panel mounting hole

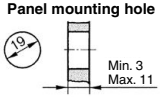

Symbol

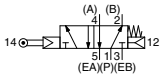

∗ 0.5 MPa supply

F.O.F. ∗	20 N
P.T.	1.5 mm
O.T.	2.0 mm
T.T.	3.5 mm

Toggle lever
VFM250-02-08

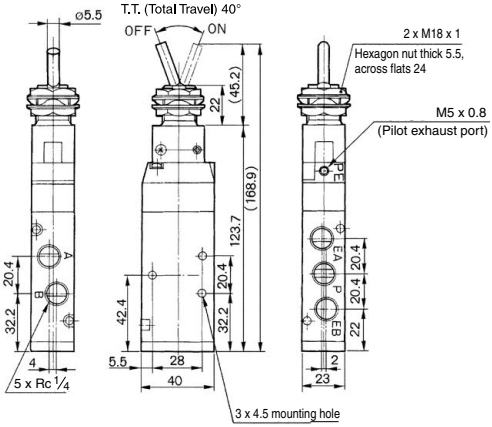

Panel mounting hole

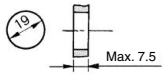

Symbol

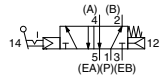

∗ 0.5 MPa supply

F.O.F. ∗	15 N
T.T.	40°

Courtesy of Steven Engineering, Inc - (800) 258-9200 - sales@steveneng.com - www.stevenengineering.com

VFM200 Series

Push button (Mushroom)
VFM250-02-30R/B/G/Y

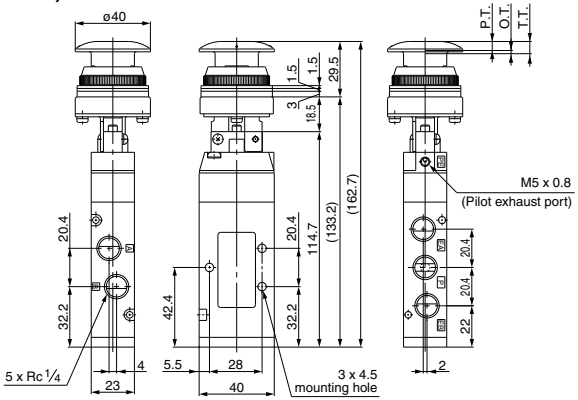

Panel mounting hole

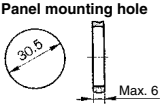

Symbol

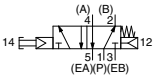

∗ 0.5 MPa supply

F.O.F. ∗	21 N
P.T.	4.8 mm
O.T.	1.7 mm
T.T.	6.5 mm

Push button (Extended)
VFM250-02-32R/B/G/Y

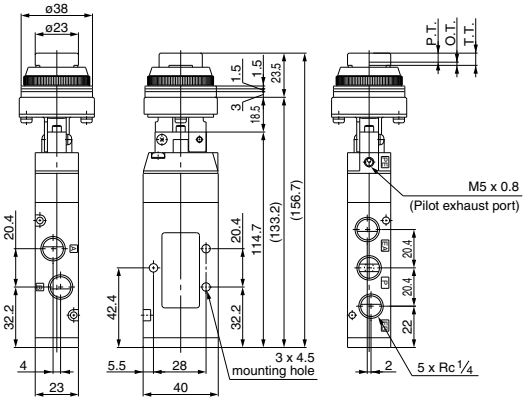

Panel mounting hole

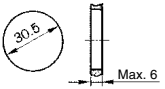

Symbol

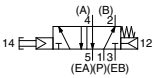

∗ 0.5 MPa supply

F.O.F. ∗	21 N
P.T.	4.8 mm
O.T.	1.7 mm
T.T.	6.5 mm

Push button (Flush)
VFM250-02-33

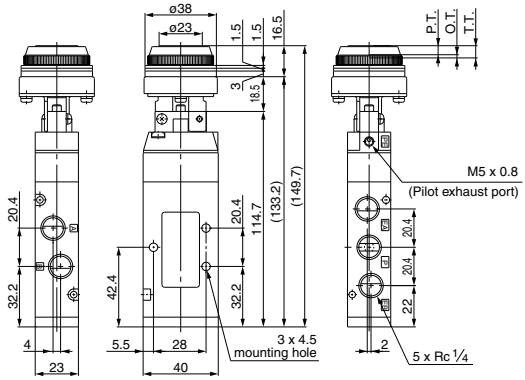

Panel mounting hole

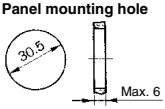

Symbol

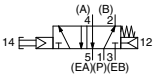

∗ 0.5 MPa supply

F.O.F. ∗	21 N
P.T.	4.8 mm
O.T.	1.7 mm
T.T.	6.5 mm

SMC
Courtesy of Steven Engineering, Inc - (800) 258-9200 - sales@steveneng.com - www.stevenengineering.com

VFM200 Series

Twist selector (2 position)
VFM250-02-34R/B/G/Y

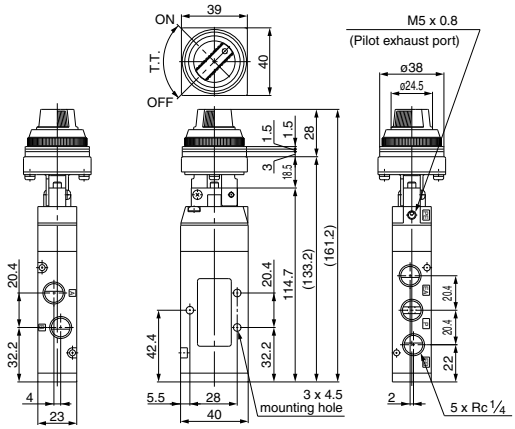

Panel mounting hole

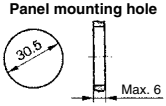

Symbol

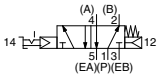

∗ 0.5 MPa supply

F.O.F. ∗	23 N
T.T.	90°

Key selector (2 position)
VFM250-02-36

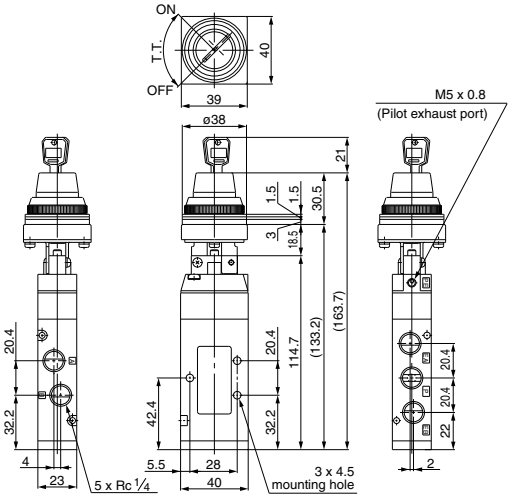

Panel mounting hole

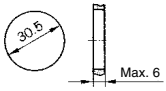

Symbol

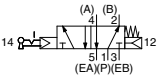

∗ 0.5 MPa supply

F.O.F. ∗	26 N
T.T.	90°

Key can be removed at the "on" and "off" positions.

External pilot type
VFM251 type

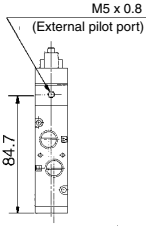

With foot bracket
VFM250-02-□□-F

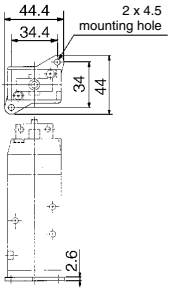

Courtesy of Steven Engineering, Inc - (800) 258-9200 - sales@steveneng.com - www.stevenengineering.com

Made to Order 1

Please contact SMC for detailed dimensions, specifications and lead times.

Alternate Type, Mushroom Push Button — X207

Alternate type: When pushing the push button, the valve actuates and will hold its position even after the button is released. Pushing the button again will return the button and valve to their previous position.

VM430-01-30R/B/G/Y-X207

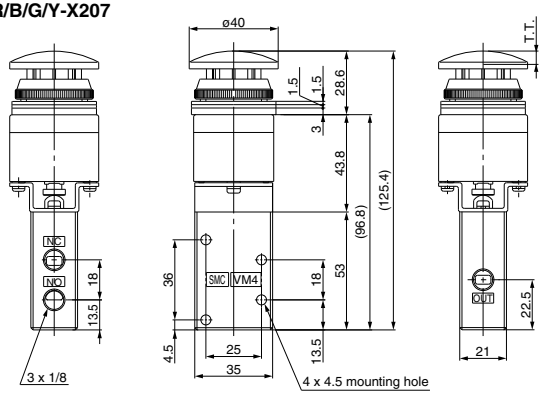

Panel mounting hole

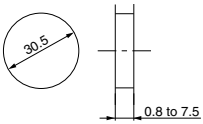

Symbol

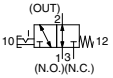

∗ 0.5 MPa supply

F.O.F. ∗	26 N
T.T.	6.7 mm

VZM450-01-30R/B/G/Y-X207

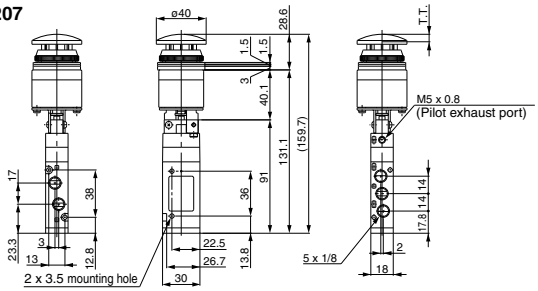

Panel mounting hole

Symbol

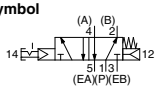

∗ 0.5 MPa supply

F.O.F. ∗	16 N
T.T.	6.7 mm

VZM550-01-30R/B/G/Y-X207

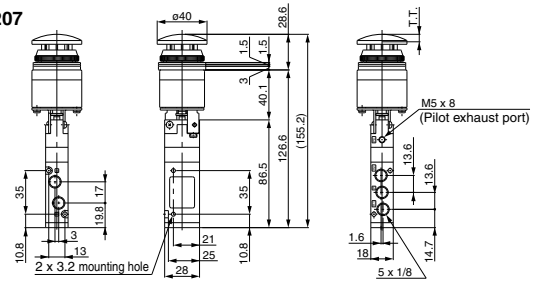

Panel mounting hole

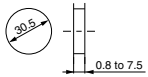

Symbol

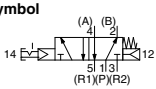

∗ 0.5 MPa supply

F.O.F. ∗	21 N
T.T.	6.7 mm

SMC

Courtesy of Steven Engineering, Inc - (800) 258-9200 - sales@steveneng.com - www.stevenengineering.com

Made to Order 2

Please contact SMC for detailed dimensions, specifications and lead times.

Made to Order

Alternate Type, Mushroom Push Button — X207

VFM350-02-30R/B/G/Y-X207

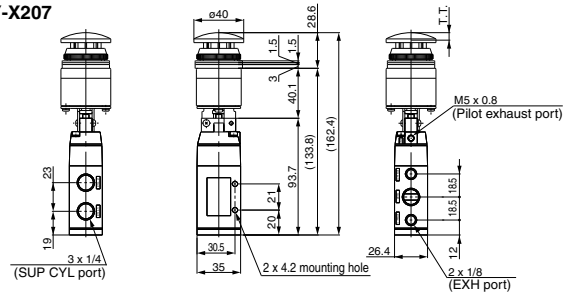

Panel mounting hole

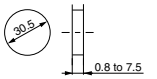

Symbol

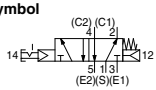

∗ 0.5 MPa supply

F.O.F. ∗	21 N
T.T.	6.7 mm

VFM250-02-30R/B/G/Y-X207

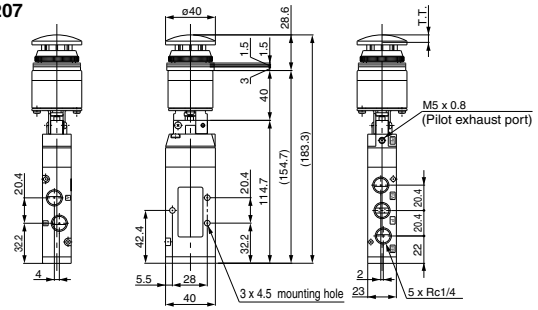

Panel mounting hole

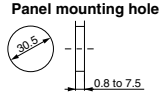

Symbol

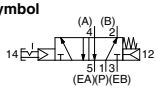

∗ 0.5 MPa supply

F.O.F. ∗	21 N
T.T.	6.7 mm

Courtesy of Steven Engineering, Inc - (800) 258-9200 - sales@steveneng.com - www.stevenengineering.com

Made to Order 3

Please contact SMC for detailed dimensions, specifications and lead times.

Made to Order

Push-lock Turn-reset Type, Mushroom Push Button **X219**

Push-lock turn-reset type: When pressing the push button, it is locked in this status. Turning the button clockwise will reset it.

VM430-01-30R/B/G/Y-X219

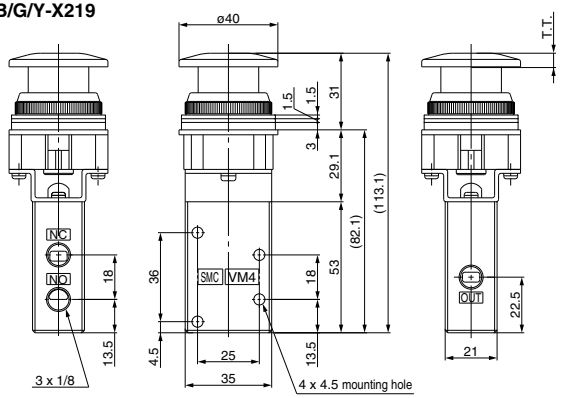

Panel mounting hole

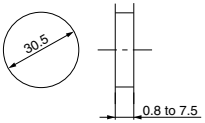

Symbol

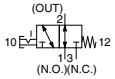

∗ 0.5 MPa supply

F.O.F. ∗	26 N
T.T.	5.8 mm

VZM450-01-30R/B/G/Y-X219

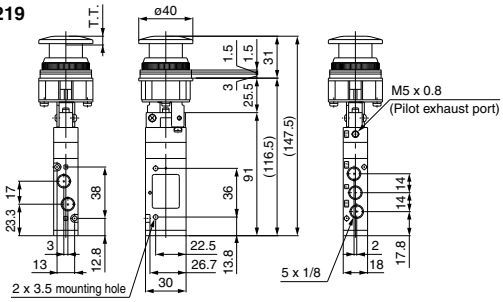

Panel mounting hole

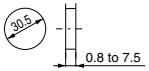

Symbol

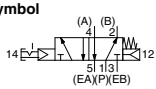

∗ 0.5 MPa supply

F.O.F. ∗	21 N
T.T.	5.8 mm

VZM550-01-30R/B/G/Y-X219

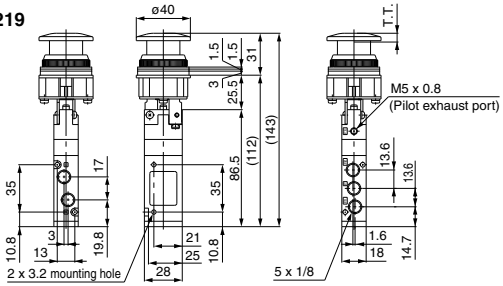

Panel mounting hole

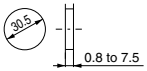

Symbol

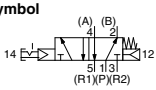

∗ 0.5 MPa supply

F.O.F. ∗	21 N
T.T.	5.8 mm

SMC

Courtesy of Steven Engineering, Inc - (800) 258-9200 - sales@steveneng.com - www.stevenengineering.com

Made to Order 4

Please contact SMC for detailed dimensions, specifications and lead times.

Made to Order

Push-lock Turn-reset Type, Mushroom Push Button

X219

VFM350-02-30R/B/G/Y-X219

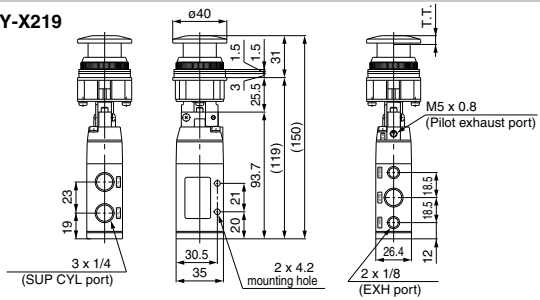

Panel mounting hole

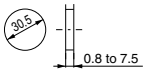

Symbol

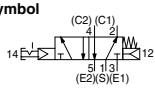

∗ 0.5 MPa supply

F.O.F. ∗	21 N
T.T.	5.8 mm

VFM250-02-30R/B/G/Y-X219

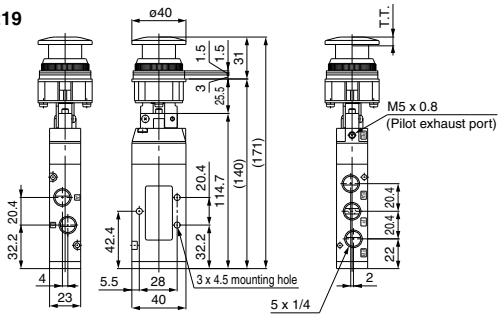

Panel mounting hole

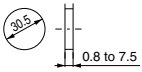

Symbol

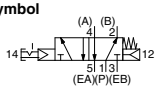

∗ 0.5 MPa supply

F.O.F. ∗	21 N
T.T.	5.8 mm

Courtesy of Steven Engineering, Inc - (800) 258-9200 - sales@steveneng.com - www.stevenengineering.com

Made to Order 5

Please contact SMC for detailed dimensions, specifications and lead times.

Made to Order

RoHS

Foot Pedal Type 5 Port Mechanical Valve

XT34-60/67

- **5 port is added to the foot pedal type mechanical valve.**
- **Models with lock and without lock are available.**

Model

Model	XT34-60	XT34-67
Lock	With lock	Without lock
Weight	0.8 kg	0.5 kg

Specifications

Fluid	Air/Inert gas		
Operating pressure	0.15 to 0.9 MPa		
Ambient and fluid temperature	–5 to 60°C (No freezing)		
Flow rate characteristics	C [dm³/(s·bar)]	b	Cv
1(P) → 2(B)/4(A)	0.76	0.22	0.17
2(B)/4(A) → 4(EB)/5(EA)	0.53	0.28	0.13
Lubrication	Not required (Use turbine oil Class 1 ISO VG32, if lubricated)		
Port size	Port 1(P), Port 2(B), Port 4(A): Rc1/8		
	Port 3(EB), Port 5(EA): M5 x 0.8		

■XT34-60 (With lock)

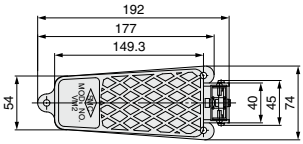

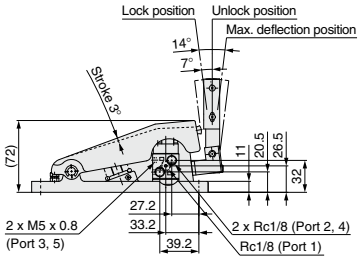

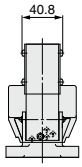

Symbol

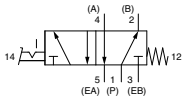

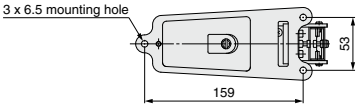

Travel required for operation	3°
Full Operating Force (F.O.F.)	55 N (at 0.5 MPa)
Travel required to release the lock	7°
Force required to release the lock (F.O.F)	3.5 N

Operation

Locked
When stepping on the pedal, it is locked by the lock lever, and held in a locked state.

Unlocked
When pushing the lock lever with the toe, the lock is released, and the pedal returns to its original position.

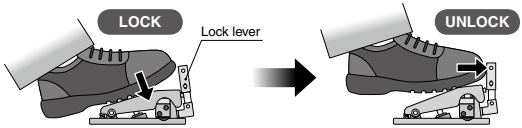

SMC

Courtesy of Steven Engineering, Inc - (800) 258-9200 - sales@steveneng.com - www.stevenengineering.com

■XT34-67 (Without lock)

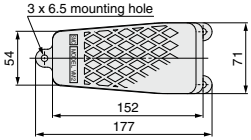

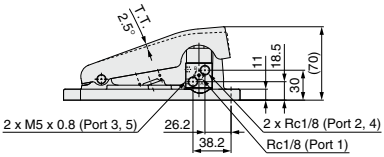

Symbol

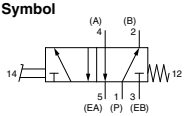

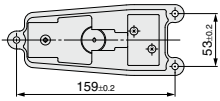

Total Travel (T.T.)	2.5°
Full Operating Force (Reference value)(F.O.F.)	55 N (at 0.5 MPa)

Courtesy of Steven Engineering, Inc - (800) 258-9200 - sales@steveneng.com - www.stevenengineering.com

VM Series
Specific Product Precautions 1

Be sure to read this before handling the products.
Refer to back page 50 for Safety Instructions and pages 3 to 9 for 3/4/5 Port Solenoid Valve Precautions.

Definition of Symbol

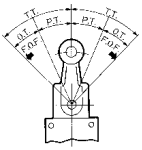

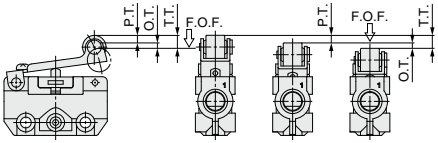

- **F.O.F. <Full Operating Force>**
  Required force to total travel position
- **P.T. <Pre-travel>**
  From free position to initial valve operating position
- **O.T. <Over Travel>**
  From initial valve operating position to total travel position
- **T.T. <Total Travel>**
  From free position to total travel position

Design

⚠ Warning

1. This product cannot be used for applications in which the pressure must be sealed.

Since mechanical valves are subject to minimal air leakage, they cannot be used for applications that require holding pressure (including vacuum).

2. Not suitable for use as an emergency shutoff valve

This mechanical valve is not designed for safety applications such as an emergency shutoff valve. If the valves are used for the mentioned applications, additional safety measures should be adopted.

Mounting

⚠ Warning

1. Mount the mechanical operation type mechanical valve so that the valve does not operate over the operating limit range.

Failure to do so may result in damage to the mechanical valve itself or lead to equipment malfunction.

2. Operate the mechanism within the stroke range that has been obtained through the formula given below. (Do not move beyond the operating limit position.)

Actuator stroke = (P.T. + 0.5 x O.T.) to (P.T. + O.T. – 0.1)

Series	Actuator		Actuator stroke (mm)
VM1000	Basic	T.T. = 4.8 mm (T.T. = 2.5 mm)	3.7 to 4.7 (2.2 to 2.4)
	Roller lever		3.5 to 4.4
	One way roller lever		3.5 to 4.4
VM400	Basic		2.5 to 3.4
	Roller lever		6.2 to 8.2
	One way roller lever		6.5 to 8.7
	Straight plunger		4.5 to 5.4
	Roller plunger		4.5 to 5.4
	Cross roller plunger		4.5 to 5.4
VZM500 VZM400 VFM300 VFM200	Basic		2.0 to 2.9
	Roller lever		4.2 to 6.0
	One way roller lever		4.7 to 6.7
	Straight plunger		2.5 to 3.4
	Roller plunger		2.5 to 3.4

For the straight plunger and roller plunger, there are grooves indicating P.T. and T.T. for stroke adjustment.

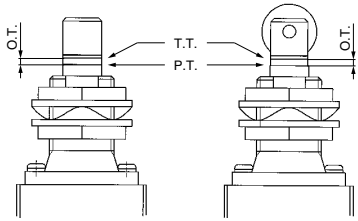

3. Never perform additional machining such as enlarging the body mounting holes.

As doing so could lead to unexpected abnormal conditions such as air leakage.

For specific product precautions of the VM100/200 series, refer to pages 1610 to 1613.

Courtesy of Steven Engineering, Inc - (800) 258-9200 - sales@steveneng.com - www.stevenengineering.com

Specific Product Precautions 2

Be sure to read this before handling the products.
Refer to back page 50 for Safety Instructions and pages 3 to 9 for 3/4/5 Port Solenoid Valve Precautions.

Operation

⚠ Warning

1. When using a mechanical operation type mechanical valve, select the angle and the maximum speed limit of the cam and dog so that the valve does not exceed the following maximum values.
If operated over the maximum values, impact force from the cam and dog will be applied to the actuator, resulting in damage.

Series	Actuator	Angle limit switch actuator	Max. speed limit switch actuator (m/s)
VM1000	Roller lever	30°	0.7
		45°	0.3
	One way roller lever	30°	0.7
		45°	0.3
VM400	Roller lever	30°	0.7
		45°	0.3
	One way roller lever	30°	0.7
		45°	0.3
	Straight plunger	—	0.2
	Roller plunger	30°	0.3
	Cross roller plunger	30°	0.3
VZM500 VZM400 VFM300 VFM200	Roller lever	30°	1.5
		45°	0.7
	One way roller lever	30°	0.7
		45°	0.3
	Straight plunger	—	0.4
	Roller plunger	30°	0.7
VM800	Roller lever	30°	0.5
		45°	0.2
	Adjustable roller lever	30°	0.2
		45°	0.1
	Adjustable rod lever	—	0.2

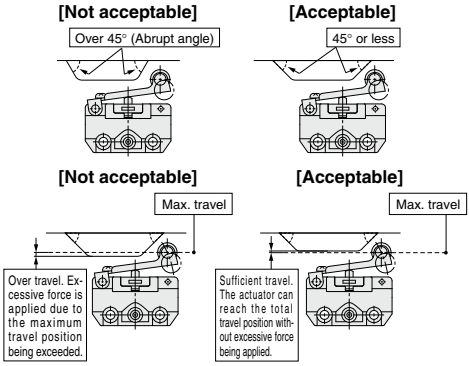

2. Be sure to always operate push button type, twist selector type, and toggle lever type mechanical valves with your finger.
The use of tools such as hammers and equipment such as cylinders and cams to operate the product can damage the actuator and the valve body.

Operation

⚠ Warning

3. Operate the roller lever type from the direction shown below.
In cases where the dog goes over the actuator, select the one way roller lever type or the roller plunger type.

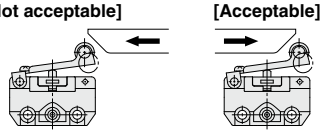

4. As the VZM and VFM series are pilot operated mechanical valves, when primary pressure is no longer being supplied due to the current operating state, the built-in spring will return the main valve to the non-operating state position. For this reason, when the supply of primary pressure is resumed, in the times it takes for the pilot pressure to be recovered, there may be some instantaneous output from 1 → 2 (P → B).

⚠ Caution

1. If the operating condition is maintained for long periods of time, it may take some time for the valve to restart due to the adherence of the seals and there might be a delay for recovery.

Air Supply

⚠ Warning

1. Operable fluid is either air or inert gas only.
It cannot be used for corrosive gas and fluid.

⚠ Caution

1. Grease is used for the inside of the valves.
Grease may enter into the outlet port of the valve.

Operating Environment

⚠ Warning

1. Do not operate it in an area in which fluids such as oil, coolant, or water splash on it or dust comes in contact with it.
Because it does not have a waterproof or dustproof construction, fluids or dust could enter the valve, leading to malfunction. Therefore, take measures such as providing a protective cover to prevent direct exposure.

2. Do not expose the product to direct sunlight for an extended period of time.

Maintenance

⚠ Warning

1. Perform inspections on a regular basis as necessary, such as at the beginning of an operation, to make sure that the mechanical valve operates properly.

2. Do not disassemble, modify or repair the product.
This may lead to malfunction of equipment, injury and equipment damage. Please contact SMC for repairs and maintenance of the product.

For specific product precautions of the VM100/200 series, refer to pages 1610 to 1613.

Courtesy of Steven Engineering, Inc - (800) 258-9200 - sales@steveneng.com - www.stevenengineering.com

VM Series
Specific Product Precautions 3

Be sure to read this before handling the products.
Refer to back page 50 for Safety Instructions and pages 3 to 9 for 3/4/5 Port Solenoid Valve Precautions.

How to Change the Buttons

⚠ Caution

Replace the button in the following manner to change color of the button.

1. Push button (Flush type)

- Installation ···· Of the four colors, red, green, black, and yellow, select and align the protruding portion of the button with the recessed portion of the body and push in.
- Removal ···· Remove the fastening ring and insert the tip of a small flat screwdriver into the groove of the button to pry it up.

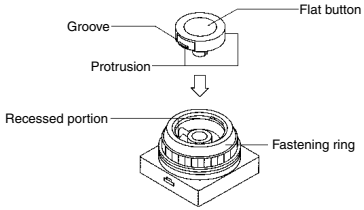

2. Push button (Mushroom and extended types)

At the time of shipment, only 1 button of the color that you specified is attached to the body.

	Mushroom type	Extended type
Mounting	Align the protruding portion of the button with the recessed portion of the body and push in. (Use the mark on the button as a reference to align the protruding part.)	Align the protruding portion of the button with the recessed portion of the body and push in.
Removal	Placing your finger under the collar of the button on the side of the mark, tilt it upward.	Remove the fastening ring and insert the tip of a small flat screwdriver into the groove of the button to pry it up.

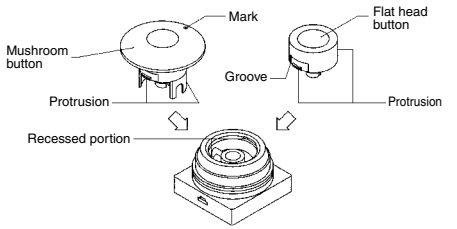

How to remove a mushroom button

How to remove at panel mount

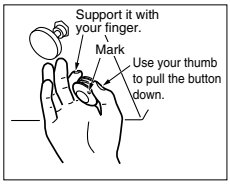

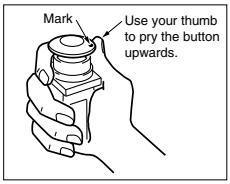

How to Change the Buttons

⚠ Caution

Replacement Parts

1. Use the part numbers listed below to order individual mushroom, extended, or flush type buttons.

Color	Mushroom type button	Extended type button	Flush type button
Red	3402186R	3402187R	3402188R
Black	3402186B	3402187B	3402188B
Green	3402186G	3402187G	3402188G
Yellow	3402186Y	3402187Y	3402188Y

2. To order single fastening ring, use the part number below.

Fastening ring: 3402184

3. To order a single push button for VM1000 series and a single cover use the part number below.

Color	Push button	Cover for push button
Red	3410701-R	3410703 (White only)
Black	3410701-B	
Green	3410701-G	

VM-X219, VZM-X219, VFM-X219 Series How to Mount Panel

[Task 1] Removal of the push button and fastening ring

Remove them from the body turning them counterclockwise in the order of the pushbutton and fastening ring.

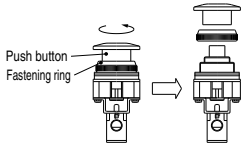

[Task 2] Mounting the valve to the panel

Insert the valve to the panel and fix it with a fastening ring. Remove three spacers attached to the valve depending on the panel thickness.

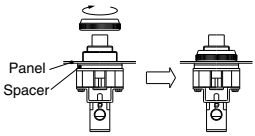

[Task 3] Mouting the push button

Tighten the push button clockwise by hand and further tighten it until load is applied.

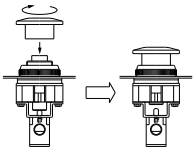

Note) When the push button is not tightened enough, the valve may not output correctly after operating the push button. In other cases, the valve outputs temporally, but when it is in the holding state, the valve may stop outputting. In this situation, please tighten the push button again.

For specific product precautions of the VM100/200 series, refer to pages 1610 to 1613.

Courtesy of Steven Engineering, Inc - (800) 258-9200 - sales@steveneng.com - www.stevenengineering.com