Expertise, our source of energy

SURGE PROTECTION SOLUTIONS

SURGE-TRAP® UL/CSA SURGE PROTECTIVE DEVICES

TABLE OF CONTENTS - PRODUCT SOLUTIONS

DIN-Rail Products

NEMA Products

SPD Components

Surge Protection

Introduction to Surge Protection 3-5
Standards 6-7

NEC Code Changes

2020 8
2017 9-12

Surge-Trap®

Core Offering 13

DIN-Rail Products

Surge-Trap® STMT23 Slim Series 14-15
Surge-Trap® STP Series 16-17, 20
Surge-Trap® ST Series 18-20
Surge-Trap® STPT2-PV Series for Photovoltaic 21

NEMA Products

Surge-Trap® STXH Series 22-23
Surge-Trap® STXR Series 24-25
Surge-Trap® STXP Series 26-27
Surge-Trap® STXT Series 28-29
Surge-Trap® STZ-R Series 30-31

SPD Components

TPMOV® (Thermally Protected MOV Technology): TPMOV and TPMOV7 32-33
TPMOV® (Thermally Protected MOV Technology): 25TPMOV 33-35

Courtesy of Steven Engineering, Inc - (800) 258-9200 - sales@steveneng.com - www.stevenengineering.com

SURGE. TRANSIENT SPIKE. OVER VOLTAGE.

POWER RELATED FLUCTUATIONS COST NORTH AMERICAN COMPANIES MORE THAN $80 BILLION A YEAR

You have expensive equipment you rely on every day to meet your customers' needs. Down machines cost you time, money, and resources to get back on line. With a minimal investment, you can protect your sensitive control equipment or your entire facility from surge events. Mersen's Surge-Trap® product line offers a world-class suite of surge protection products designed to protect your facility from harmful and preventable surge damage.

Most surge spikes originate from within a customer's own facility. In fact, nearly 80% of all surge problems are directly attributed to power disturbances from within the facilities own equipment.

Any facility with motors stopping and starting, light load panels being turned on and off frequently, and other potential power disturbances is at risk for damage caused by a surge spike.

Of course, surges in electrical power can also originate outside of a facility, accounting for roughly 20% of facility transient problems. These surges may be caused by utility grid switching, lightning strikes, switching of capacitor banks, and electrical accidents.

Although many transients are not predictable, damage to a facility is preventable with a proven and tested surge protective device.

WHAT TYPES OF DAMAGE CAN A SURGE CAUSE TO A FACILITY?

- **Disruptive:** A surge enters an electronic component which interprets the valid logic command. The result: system lock-up, machine malfunction leading to faulty output, or corrupted files.
- **Dissipative:** A repetitive pulsing of short duration energy. The result: Long-term machine or system degradation leading to system replacement at earlier intervals.
- **Destructive:** A high-level energy surge that immediately results in equipment failure or destruction.

WHAT DOES A VOLTAGE SURGE LOOK LIKE?

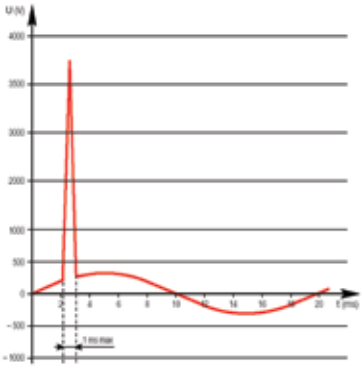

A voltage surge is a voltage level that is short in duration and can be several times greater than the system's normal operating AC RMS or DC voltage level.

Courtesy of Steven Engineering, Inc - (800) 258-9200 - sales@steveneng.com - www.stevenengineering.com

FOR SURGE PROTECTION THAT COVERS EVERY VOLTAGE NEED WITHIN YOUR FACILITY

Metal Oxide Varistors (MOVs) are the most common and efficient technology used to protect equipment against damaging voltage spikes. However, while MOVs are efficient, they also degrade over time and possibly fail catastrophically when they reach end of life. In response, UL wrote standards to prevent fire risk while using MOVs. In 2009, UL 1449 3rd Edition was published*, and it transformed the way SPD manufacturers designed and manufactured their devices.

This is when Mersen's TPMOV became essential. This Mersen-patented invention was the first fail-safe Thermally Protected MOV (TPMOV) able to pass all UL 1449 3rd Edition tests as well as even more stringent tests applied by our customers. A few years later, Mersen TPMOVs are often imitated, but there is still no match to Mersen's technology.

Almost all Mersen SPDs feature our Thermally Protected MOV (TPMOV) technology, a fail-safe surge protection solution without the need for additional upstream protection. As a result, the Surge-Trap® product line offers the lowest cost, safest, and most reliable surge protection products on the market.

	MERSEN SURGE-TRAP	TYPICAL COMPETITOR
Surge Protective Device	$	$
Fuse	-	$
Fuse Holder	-	$
Additional Wiring	-	$
Installation Cost	$	$$
Panel Footprint	-	$
Total Product Cost	$$	$$$$$$$

**UL 1449 4th Edition, effective March 2016, has superseded 3rd Edition, furthering the surge protection standards.*

- **Thermal MOV protection (TPMOV).** Thermal protection eliminates an MOV's hazardous and destructive failure modes (thermal runaway).
- **Overvoltage is solely managed by TPMOV technology.** This technology eliminates the need for additional wiring, fuse components, and costly installation time.
- **Prevention protection method.** Save MOV disconnection prior to MOV thermal runaway (as opposed to the containment method). No emission of fire, smoke, soot, or ionized gas.
- **Industry Innovation.** Mersen developed the first SPD product to pass UL 1449 3rd edition safety testing, utilizing our patented TPMOV technology.
- **Highest Short-Circuit Current Rating (SCCR).** Surge-Trap products feature the highest SCCR rating available for any surge protective device, allowing for higher safety ratings and protection.
- **Isolated MOV.** Surge-Trap products provide fail-safe protection by isolating the MOV at the end of life.

Mersen offers surge protection products ranging from point-of-use protection to complete facility protection. The Surge-Trap product line represents the broadest suite of products for all your application requirements.

Courtesy of Steven Engineering, Inc - (800) 258-9200 - sales@steveneng.com - www.stevenengineering.com

SURGE PROTECTION: TYPE DESIGNATIONS AND LOCATION CATEGORIES

Per the National Electrical Code® (NEC) and ANSI/UL 1449, SPDs are designated as follows:

Type 1: Permanently connected, intended for installation between the secondary of the service transformer and the line side of the service disconnect overcurrent device (service equipment). Their main purpose is to protect insulation levels of the electrical system against external surges caused by lightning or utility capacitor bank switching.

Type 2: Permanently connected, intended for installation on the load side of the service disconnect overcurrent device (service equipment), including branch panel locations. Their main purpose is to protect the sensitive electronics and microprocessor-based loads against residual lightning energy, motor generated surges, and other internally generated surge events.

Type 3: Point-of-utilization SPDs installed at a minimum conductor length of 10 meters (30 feet) from the electrical service panel to the point-of-utilization. Examples include cord connected, direct plug-in, and receptacle type SPDs.

The Institute of Electrical and Electronics Engineers (IEEE) has developed three categories that every facility can be divided into, location Category A, B, and C. See IEEE Standard C62.41.1 and C62.41.2 for further reference.

Category C: Outside overhead lines and service entrance (outdoor)

- Service drops from pole to building
- Runs between meter and panel
- Overhead lines to detached building
- Underground lines to well pump

Category B: Feeders, short branch circuits and service panels (indoor)

- Distribution panel devices
- Bus and feeder distribution
- Heavy appliance outlets with “short” connections to service entrance
- Lighting systems in large buildings

Category A: Outlets/receptacles and long branch circuits (indoor) (least severe)

- All outlets at more than 10m (30 ft) from Category B
- All outlets at more than 20m (60 ft) from Category C

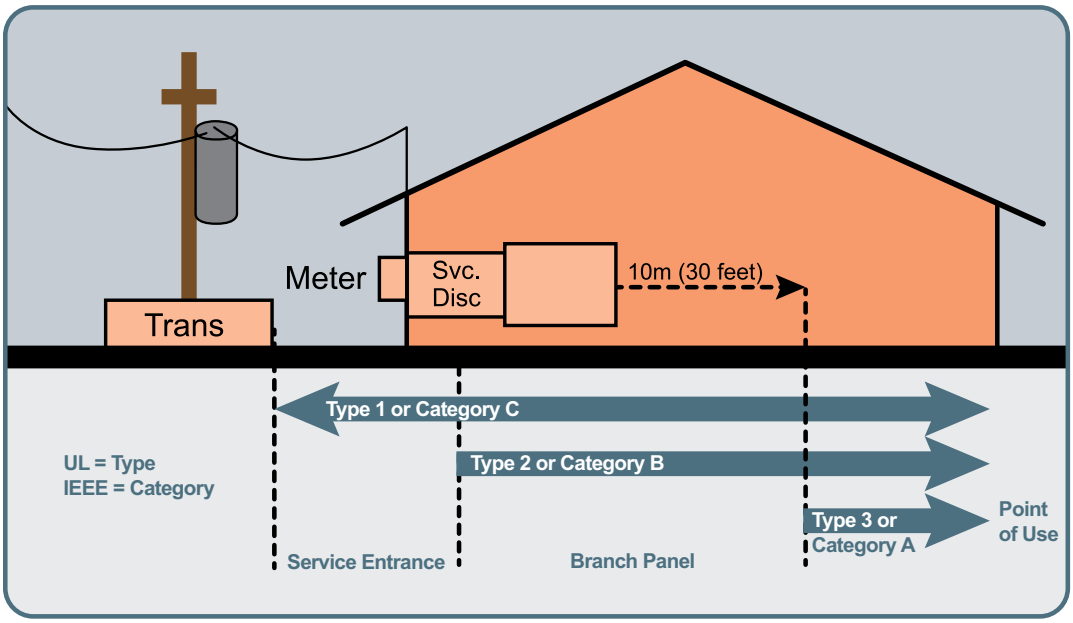

Courtesy of Steven Engineering, Inc - (800) 258-9200 - sales@steveneng.com - www.stevenengineering.com

MAKE SURE YOUR INSTALLATION COMPLIES WITH UL 1449 4TH EDITION STANDARDS

UL can mark SPDs with two different classifications. A product that fully complies with the UL 1449 4th Edition type categories 1, 2, or 3 is marked with a small holograph label bearing the letters SPD. It also has the UL Listing Symbol.

When a product is compliant as a component assembly of UL 1449 4th Edition, UL labels it as a Recognized Component.

- Recognized components require additional safety evaluation for the application of the product and normally this type is installed at an OEM or an electrical panel manufacturer location.
- If it is integrated into a listed panel, a UL representative will review the application to confirm it meets safety requirements.
- The UL Recognition symbol is shown as a mirror image UR.

A UL Recognized product receives a detailed list of how it is different than a listed product. The UL test report provides the "Conditions of Acceptability." An OEM and UL field engineer requires this information to assure the SPD is applied safely.

Non-UL listed products can be misleading. Some SPD manufacturers self-test their units using their own opinion of what is important. They can state on the packaging that the SPD is UL 1449 compliant, but it's just their opinion. The use of these products is not in compliance with NEC regulations because they are not listed. Some independent third party testing labs will test to only portions of UL 1449 at the manufacturer's request. Look for the UL Listed logo or UL hologram logo to avoid this situation.

AN EXAMPLE OF A PRODUCT COMPLYING WITH UL 1449 4TH EDITION AND THE NEC:

If a maintenance person wanted to protect an existing machine panel against voltage surges, they might select a Mersen STXR480Y05. This is rated 480/277 volts supplied by a three-phase wye solidly grounded neutral source with not over 200kA short-circuit current. This is UL listed for a fully compliant field installation.

An OEM could select either the Mersen STXR480Y05 as above, or the Mersen STP480Y07 DIN-Rail SPD, which is UL Recognized. If the UL Recognized product is chosen, the application must meet the UL "Conditions of Acceptability." In this example, mounting the SPD inside of the machine panel fully complies.

If there is any question about the veracity of a UL SPD status, UL has an easy verification procedure on their website at www.ul.com. At the bottom of the home page, click on the online Certifications Directory. Then enter the name of the manufacturer to verify the appropriate UL listing.

Courtesy of Steven Engineering, Inc - (800) 258-9200 - sales@steveneng.com - www.stevenengineering.com

SURGE PROTECTION TERMS TO KNOW

There are many unique surge protection terms that are helpful to know. Below is a glossary of frequently used terms:

- **8/20 current impulse current:** Impulse with a virtual front time[1] of 8µs and a time to half-value[2] of 20µs.
- **Clamp Voltage:** The peak MOV terminal voltage measured with an applied 8/20 µs pulse of rated impulse current.
- **Metal Oxide Varistor (MOV):** An electronic component that is commonly used to divert excessive current to the ground and/or neutral lines.
- **Maximum Continuous Operating Voltage (MCOV):** The maximum rms voltage that may be continuously applied to the SPD for each connected mode.
- **Nominal Discharge Current Rating (I_n):** Peak value of the current through the SPD, selected by the manufacturer from a list of predetermined values, having a short-circuit current wave shape of 8/20 µs where the SPD remains functional after 15 surges.
- **Voltage Protection Rating (VPR):** A rating per UL 1449 4th Edition, signifying the rounded-up average measured limiting voltage of an SPD when the SPD is subjected to the surge produced by a 6kV, 3kA 8/20 µs combination waveform generator.
- **Short-Circuit Current Rating (SCCR):** The suitability of an SPD for use on an AC power circuit that is capable of delivering not more than a declared rms symmetrical current at a declared voltage during a short circuit condition.
- **Surge Protective Device (SPD):** A device that contains at least one nonlinear component and is listed to limit surge voltages and divert surge current.
- **Voltage Protection Level (U_p):** Maximum voltage to be expected at the SPD terminal when subjected to the SPD's nominal discharge current (I_n).

Note 1: The front time is defined according to IEC 60060-1 to be 1.25 x (t90 – t10).

Note 2: The time to half-value is defined as the time between the virtual origin and the 50% point on the tail.

NEW TO SURGE PROTECTION?

Mersen offers educational and collaborative product training annually with opportunity for hands-on experience to learn more about our products. For information on when the next training will be offered, please contact Mersen USA at 978.462.6662.

Courtesy of Steven Engineering, Inc - (800) 258-9200 - sales@steveneng.com - www.stevenengineering.com

2020 NEC® CHANGES TO SURGE PROTECTION
230.67: SURGE PROTECTION FOR DWELLING UNITS

PREVIOUS CODE REQUIREMENTS:

There were no previous requirements for services supplying dwelling units to include surge protection.

NEW CODE:

230.67 Surge Protection
All services supplying dwelling units shall be provided with a surge protective device (SPD)

REASONS FOR CHANGES:

The main reasoning for this requirement is the protection of the people in these dwellings in addition to the protection of property. This requirement aims to prevent fires in residential applications as well as protect from the loss of costly electronics and appliances.

HOW TO COMPLY:

All services supplying dwelling units shall be provided with an SPD. A Type 1 or Type 2 device must be integrated into the service equipment or be located immediately adjacent to it. Type 3 SPDs, such as cord-connected surge strips, do not satisfy the new NEC 2020 Code requirement.

HELPFUL PRODUCTS:

Mersen's Surge-Trap STXH series is the ideal solution to comply with the new requirements for dwelling units. Mersen's Surge-Trap STXR, STXP, and STXT series can provide greater protection and can also accommodate a wider range of voltage configurations to fit any dwelling application.

Courtesy of Steven Engineering, Inc - (800) 258-9200 - sales@steveneng.com - www.stevenengineering.com

2017 NEC® CHANGES TO SURGE PROTECTION
620.51 (E): SURGE PROTECTION FOR EMERGENCY ELEVATOR, DUMBWAITER, ESCALATOR, MOVING WALK, PLATFORM LIFT, OR STAIRWAY CHAIRLIFT

PREVIOUS CODE REQUIREMENTS:

There were no previous requirements for surge protection in elevator type circuits.

NEW CODE:

620.51 (E) Surge Protection. (Elevators)
Where any of the disconnecting means in 620.51 has been designated as supplying an emergency system load, surge protection shall be provided.

REASONS FOR CHANGES:

From 2013 to 2014 NFPA sponsored a survey to determine the damaging effects of voltage surges in various applications. 24% of responders to the survey reported damage to elevator circuits from voltage surges. Surge Protection is not solely designed to protect against lighting but also surges that are created by other equipment within a facility.

HOW TO COMPLY:

Using type 1 SPDs either internally or externally ensure that emergency elevator circuits are protected from damaging surges.

HELPFUL PRODUCTS:

Mersen has full line of Type 1-listed SPDs for all applications. The Mersen models are designed to protect service entrances, panels, and point-of-use equipment.

Courtesy of Steven Engineering, Inc - (800) 258-9200 - sales@steveneng.com - www.stevenengineering.com

PREVIOUS CODE REQUIREMENTS:

There were no previous requirements for surge protection in critical operations data systems. However, the previous code does require surge protection at a distribution level for critical operations per article 708.20 (D).

NEW CODE:

645.18 Surge Protection for Critical Operations Data Systems.
Surge protection shall be provided for critical operations data systems.

REASONS FOR CHANGES:

While Article 708.20 (D) does require surge protection it is only at the high level of power distributions for critical operations. For Surge Protection to be most effective, a cascading protection scheme should be used through an entire system. This added requirement ensures that protection will be installed as close as possible to critical operations data systems and provide multi-level protection in conjuction with 708.20 (D).

HOW TO COMPLY:

Use only a Type 1 SPD for general field additions to ensure they are self-protected. Type 1 component assemblies can be used but need to be installed in an enclosure.

HELPFUL PRODUCTS:

Mersen has a large variety of type 1 surge protective devices to cover most rating requirements for field additions. Mersen also has several type 1 component assemblies for installation in control panels.

Courtesy of Steven Engineering, Inc - (800) 258-9200 - sales@steveneng.com - www.stevenengineering.com

2017 NEC® CHANGES TO SURGE PROTECTION
670.6: SURGE PROTECTION FOR INDUSTRIAL MACHINERY

PREVIOUS CODE REQUIREMENTS:

There were no previous requirements for surge protection for industrial machinery.

NEW CODE:

670.6 Surge Protection
Industrial machinery with safety interlock circuits shall have surge protection installed.

REASONS FOR CHANGES:

Industrial machinery safety interlocks are required per NFPA 79 primarily to protect operators against serious injury or possible death. A 2013 and 2014 survey of facility managers commissioned by NFPA found that a significant amount of responses (26%) reported damage to safety interlocks from surge events.

HOW TO COMPLY:

Select listed SPDs with manufacturer instructions that include minimum wire sizing.

HELPFUL PRODUCTS:

Mersen has a large variety of Type 1 surge protective devices to cover most rating requirements for field additions. Mersen also has several Type 1 component assemblies for installation in control panels.

Courtesy of Steven Engineering, Inc - (800) 258-9200 - sales@steveneng.com - www.stevenengineering.com

2017 NEC® CHANGES TO SURGE PROTECTION
695.15: SURGE PROTECTION FOR FIRE PUMP CONTROLLERS

PREVIOUS CODE REQUIREMENTS:

There were no previous requirements for surge protection for a fire pump controller.

NEW CODE:

695.15 Surge Protection

A listed surge protection device shall be installed in or on the fire pump controller.

REASONS FOR CHANGES:

In 2014 surge protection requirements were added for emergency systems at a distribution level for switchboards and panelboards. 2017 expands on this further requiring another level of protection directly at the fire pump controller. NFPA survey results from 2013-2014 showed that 12% of participants reported damage to fire pump controllers from surge issues.

HOW TO COMPLY:

Use only a Type 1 SPD for general field additions to ensure they are self-protected. Type 1 component assemblies can be used but need to be installed in an enclosure.

HELPFUL PRODUCTS:

Mersen has a large variety of Type 1 surge protective devices to cover most rating requirements for field additions. Mersen also has several Type 1 component assemblies for installation in control panels.

Courtesy of Steven Engineering, Inc - (800) 258-9200 - sales@steveneng.com - www.stevenengineering.com

MERSEN SURGE-TRAP®
CORE OFFERING FOR TOTAL SURGE PROTECTION

Any facility with motors stopping and starting, light load panels being turned on and off frequently, and other potential power disturbances is at risk for damage caused by a surge spike. Turn to Mersen Surge-Trap for surge protection that covers every voltage need within your facility.

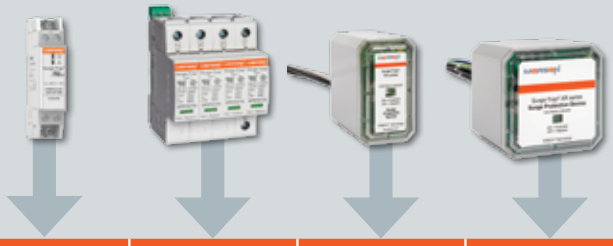

SERIES	STMT	STP	STXH	STXR	STXP	STXT	STZ
Mounting Style	DIN-Rail	DIN-Rail	Panel Mount	Panel Mount	Panel Mount Wall Mount Flush Mount	Panel Mount Wall Mount	Wall Mount
Surge Rating	6-20kA	75kA	50kA	50kA	100kA	100-200kA	100-480kA
Nominal Voltage	12-240VAC, 12-365VDC	120-690VAC	120-240VAC	120-600VAC	120-600VAC	120-600VAC	240-480VAC
Replaceable Module	No	Yes	No	No	No	No	Yes
Standard Features	End-of-life indication	End-of-life indication	NEMA 4X LED Indicator	NEMA 4X LED Indicator	NEMA 4X LED Indicator Phase Loss monitoring	NEMA 4X LED Indicator Phase Loss monitoring EMI/RFI Filter	LED Indicator Phase Loss monitoring EMI/RFI Filter Dry contact & audible alarm Surge counter
Optional Features	Dry contact for Remote Monitoring	Dry contact & audible alarm		Dry contact & audible alarm Wall Mount Bracket	Dry contact & audible alarm Flush Mount Bracket	Dry contact & audible alarm	NEMA 4X Disconnect Switch Stand-alone brick option
Warranty	2 years	2 years	3 years	5 years	10 years	10 years	15 years
Price	$	$$	$	$$	$$$	$$$$	$$$$$

Courtesy of Steven Engineering, Inc - (800) 258-9200 - sales@steveneng.com - www.stevenengineering.com

SURGE PROTECTIVE DEVICE

LOW VOLTAGE SPD FOR AC/ DC VOLTAGE CONTROL AND POWER APPLICATIONS

Mersen's Surge Trap STMT Series features low voltage surge protective devices suitable for both AC and DC voltage applications. UL 1449 4th Edition approved, this series is ideal for the protection of controls, power supplies, communication systems, and other sensitive equipment. With a slim design, these DIN-rail mount SPDs are ideal for limited space applications. The series is suitable for operating voltages of 12-230 VAC and 24-365 VDC and offers an optional dry contact feature for remote monitoring.

FEATURES AND BENEFITS:

- Maximum discharge current (8/20µs): 6kA – 20kA
- Nominal discharge current (8/20µs): 3kA – 10kA
- Combined voltage pulse (1.2/50µs): 10kV, 6kV
- Single phase networks
- Un: 12V, 24V, 48V, 60V, 120V, 230V
- Typically for use also in the corresponding DC voltages
- DIN-rail mountable, monobloc format
- Visual (LED) and remote end of life indicators
- Power status (LED) indicator
- Space saving "slim" format
- Back-up fuse IEC: 63A gG; UL: 30A CC (ATMR30)

APPLICATIONS

- Industry and automation controls
- Commercial and residential installations
- Telecom & IT & Data Centers
- LED outdoor lighting
- Water treatment

RATINGS:

- **Volts (U_n):** 24-365VAC
- **Nominal Discharge Current Rating (I_n):** 3-10kA
- **Surge Capacity (I_{max}):** 6-20kA
- **Short-Circuit Current Rating (SCCR):** 10kA

APPROVALS:

- UL 1449 4th Edition (Type 4 CA)
- IEC/EN 61643-11
- CSA C22.2 (Type 4 CA)

** Agency information not applicable to DC ratings*

Courtesy of Steven Engineering, Inc - (800) 258-9200 - sales@steveneng.com - www.steveneng.com

Catalog Number	Reference number	Nominal Voltage	Maximum Continuous Operating Voltage (MCOV)	I_{max} (8/20)	I_n (8/20)	Voltage Protection Level	U_p at I_n	Remote Monitoring?
83230500	STMT23-6K20V-SP-S	12 V	20 VAC	6 kA	3 kA	≤ 0.22 kV (L1-L2)	≤ 0.22 kV (L1-L2)	No
			25 VDC			≤ 0.67 kV (L1/L2-PE)	≤ 0.70 kV (L1/L2-PE)	
83230501	STMT23-6K20V-SP-SM	12 V	20 VAC	6 kA	3 kA	≤ 0.22 kV (L1-L2)	≤ 0.22 kV (L1-L2)	Yes
			25 VDC			≤ 0.67 kV (L1/L2-PE)	≤ 0.70 kV (L1/L2-PE)	
83230504	STMT23-6K30V-SP-S	24 V	30 VAC	6 kA	3 kA	≤ 0.26 kV (L1-L2)	≤ 0.22 kV (L1-L2)	No
			36 VDC			≤ 0.78 kV (L1/L2-PE)	≤ 0.70 kV (L1/L2-PE)	
83230505	STMT23-6K30V-SP-SM	24 V	30 VAC	6 kA	3 kA	≤ 0.26 kV (L1-L2)	≤ 0.22 kV (L1-L2)	Yes
			36 VDC			≤ 0.78 kV (L1/L2-PE)	≤ 0.70 kV (L1/L2-PE)	
83230506	STMT23-6K60V-SP-S	48 V	60 VAC	6 kA	3 kA	≤ 0.48 kV (L1-L2)	≤ 0.33 kV (L1-L2)	No
			77 VDC			≤ 0.93 kV (L1/L2-PE)	≤ 0.70 kV (L1/L2-PE)	
83230507	STMT23-6K60V-SP-SM	48 V	60 VAC	6 kA	3 kA	≤ 0.48 kV (L1-L2)	≤ 0.33 kV (L1-L2)	Yes
			77 VDC			≤ 0.93 kV (L1/L2-PE)	≤ 0.70 kV (L1/L2-PE)	
83230508	STMT23-6K75V-SP-S	60 V	75 VAC	6 kA	3 kA	≤ 0.48 kV (L1-L2)	≤ 0.50 kV (L1-L2)	No
			100 VDC			≤ 0.93 kV (L1/L2-PE)	≤ 0.90 kV (L1/L2-PE)	
83230509	STMT23-6K75V-SP-SM	60 V	75 VAC	6 kA	3 kA	≤ 0.48 kV (L1-L2)	≤ 0.50 kV (L1-L2)	Yes
			100 VDC			≤ 0.93 kV (L1/L2-PE)	≤ 0.90 kV (L1/L2-PE)	
83230502	STMT23-6K150V-SP-S	120 V	150 VAC	6 kA	3 kA	≤ 0.61 kV (L1-L2)	≤ 0.70 kV (L1-L2)	No
			200 VDC			≤ 1.03 kV (L1/L2-PE)	≤ 0.90 kV (L1/L2-PE)	
83230503	STMT23-6K150V-SP-SM	120 V	150 VAC	6 kA	3 kA	≤ 0.61 kV (L1-L2)	≤ 0.70 kV (L1-L2)	Yes
			200 VDC			≤ 1.03 kV (L1/L2-PE)	≤ 0.90 kV (L1/L2-PE)	
83230510	STMT23-20K275V-SP-S	240 V	275 VAC	20 kA	10 kA	≤ 0.96 kV (L1-L2)	≤ 1.40 kV (L1-L2)	No
			365 VDC			≤ 1.04 kV (L1/L2-PE)	≤ 1.40 kV (L1/L2-PE)	
83230511	STMT23-20K275V-SP-SM	240 V	275 VAC	20 kA	10 kA	≤ 0.96 kV (L1-L2)	≤ 1.40 kV (L1-L2)	Yes
			365 VDC			≤ 1.04 kV (L1/L2-PE)	≤ 1.40 kV (L1/L2-PE)	

TECHNICAL DATA OVERVIEW

Class	IEC: Type 2+3 / UL: Type 4 CA
U_n	12V, 24V, 48V, 60V, 120V, 230V
I_{max} Range	6 – 20 kA
I_n Range	3 – 10 kA
Body Material	PC+GF; V-0
Format	Slim monobloc
Backup fuse	IEC: 63A gG / UL: 30A CC (ATMR30)
Uoc Range	6 – 10 kV
Response Time	25 ns
Number of Poles	2
IP Code	20
Product Warranty	2 years
Operating temperature	-40 … 80 °C
Wire Gauge Range	1,5 … 6 mm²

DIMENSIONS

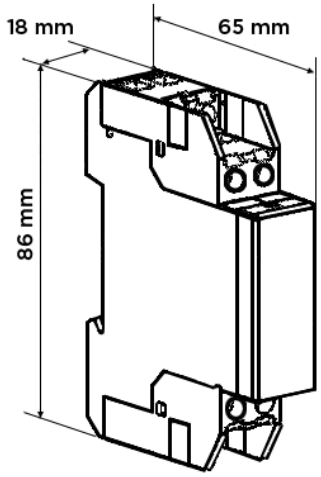

ELECTRICAL DIAGRAM

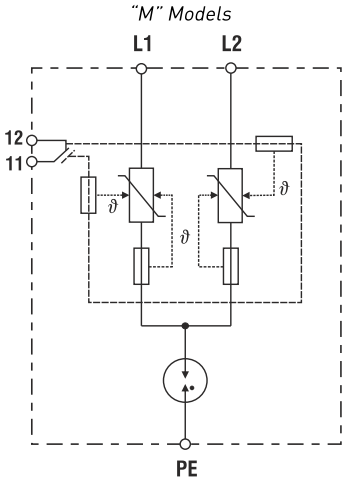

Courtesy of Steven Engineering, Inc - (800) 258-9200 - sales@steveneng.com - www.stevenengineering.com

SURGE PROTECTIVE DEVICE

DIN-RAIL PLUGGABLE SPD FOR ANSI/UL 1449 TYPE 1 AND 2 APPLICATIONS

Surge-Trap® Pluggable Surge Protective Device (SPD) is a no-fuse, fail-safe surge suppressor featuring Mersen's patented TPMOV® technology inside. UL 1449 4th Edition approved, it is DIN-rail mountable featuring a fail-safe self-protected design, visual indicator, and a small footprint. A remote indicator option provides status to critical control circuitry. The Surge-Trap Pluggable SPD has a high short circuit rating and a thermally protected MOV, which eliminates the need for additional overcurrent protection devices.

NEW AND IMPROVED 75KA RATING

Mersen's DIN-Rail Pluggable SPD is one of a kind – the combination of a robust 75kA surge capacity along with no requirement of backup fusing creates an offering unique to the market. Add this to the reliability and safety of Mersen's patented TPMOV technology and you have a truly superior product.

FEATURES AND BENEFITS:

- Easy installation or retrofit
- DIN-rail mountable
- Fail-safe, self-protected design
- Remote indicator
- Visual indicator
- IP20 finger-safe design
- Small footprint
- No additional overcurrent protection devices required
- Easy to replace modules
- 2-year warranty

RATINGS:

- **Volts (U_n):** 120-690VAC
- **Nominal Discharge Current Rating (I_n):** 10-20kA
- **Surge Capacity:** 75kA
- **Short-Circuit Current Rating (SCCR):** 200kA

APPROVALS:

- ANSI/UL 1449 4th Edition, Type 1 Component Assembly SPD, File E210793
- ANSI/IEEE C62.41.1, C62.41.2, C62.45
- RoHS Compliant

Courtesy of Steven Engineering, Inc - (800) 258-9200 - sales@steveneng.com - www.stevenengineering.com

GENERAL PRODUCT SPECIFICATIONS

Mounting:	35mm DIN-Rail
Wire Range:	4-14AWG Solid / Stranded CU
Terminal Torque:	35.4 lbs-in
Degree of Protection:	IP 20
Flammability:	UL94 V0
Operating & Storage Temperature:	– 40°C to + 85°C
Visual End of Life Indicator:	RED = End of Life
Remote End of Life Indicator:	NO/NC Dry Contact
Frequency:	50-60 Hz

1-POLE, SINGLE-PHASE, 2-WIRE

CATALOG NUMBER	NOMINAL VOLTAGE (VAC)	MAXIMUM CONTINUOUS OPERATING VOLTAGE (MCOV, VAC)				VOLTAGE PROTECTION RATING (VPR, VAC)				REPLACEMENT PLUG	I_n (kA)
		L-N	L-G	N-G	L-L	L-N	L-G	N-G	L-L	L-1	
STP120P07(M)	120	175	-	-	-	600	-	-	-	SP07U175	20
STP230P07(M)	240	275	-	-	-	900	-	-	-	SP07U275	20
STP277P07(M)	277	320	-	-	-	1000	-	-	-	SP07U320	20
STP347P07(M)	347	420	-	-	-	1500	-	-	-	SP07U420	10

2-POLE, SPLIT-PHASE, 3-WIRE

CATALOG NUMBER	NOMINAL VOLTAGE (VAC)	MAXIMUM CONTINUOUS OPERATING VOLTAGE (MCOV, VAC)				VOLTAGE PROTECTION RATING (VPR, VAC)				REPLACEMENT PLUG	I_n (kA)
		L-N	L-G	N-G	L-L	L-N	L-G	N-G	L-L	L1, L2	
STP240S07(M)	120/240	175	-	-	350	600	-	-	1200	SP07U175	20
STP480S07(M)	240/480	275	-	-	550	900	-	-	1800	SP07U275	20

3-POLE, 3-PHASE DELTA, 3-WIRE

CATALOG NUMBER	NOMINAL VOLTAGE (VAC)	MAXIMUM CONTINUOUS OPERATING VOLTAGE (MCOV, VAC)				VOLTAGE PROTECTION RATING (VPR, VAC)				REPLACEMENT PLUG	I_n (kA)
		L-N	L-G	N-G	L-L	L-N	L-G	N-G	L-L	L1, L2, L3	
STP240D07(M)	240	-	275	-	550	-	900	-	1800	SP07U275	20
STP480D07(M)	480	-	550	-	1100	-	1500	-	3000	SP07U550	10

3-POLE, 3-PHASE WYE, 4-WIRE

CATALOG NUMBER	NOMINAL VOLTAGE (VAC)	MAXIMUM CONTINUOUS OPERATING VOLTAGE (MCOV, VAC)				VOLTAGE PROTECTION RATING (VPR, VAC)				REPLACEMENT PLUG	I_n (kA)
		L-N	L-G	N-G	L-L	L-N	L-G	N-G	L-L	L1, L2, L3	
STP208Y07(M)	120/208	175	-	-	350	600	-	-	1200	SP07U175	20
STP480Y07(M)	277/480	320	-	-	640	1000	-	-	2000	SP07U320	20
STP600Y07(M)	347/600	420	-	-	840	1500	-	-	2500	SP07U420	10
STP690Y07(M)	400/690	420	-	-	840	1500	-	-	3000	SP07U420	10

4-POLE, 3-PHASE WYE, 5-WIRE, INCLUDING N-G MODE

CATALOG NUMBER	NOMINAL VOLTAGE (VAC)	MAXIMUM CONTINUOUS OPERATING VOLTAGE (MCOV, VAC)				VOLTAGE PROTECTION RATING (VPR, VAC)				REPLACEMENT PLUG		I_n (kA)
		L-N	L-G	N-G	L-L	L-N	L-G	N-G	L-L	L1, L2, L3	N-G	
STP208YN07(M)	120/208	175	175	175	350	600	1200	600	1200	SP07U175	SP07U175	20
STP480YN07(M)	277/480	320	495	175	640	1000	1500	600	2000	SP07U320	SP07U175	20
STP600YN07(M)	347/600	420	695	275	840	1500	2000	800	2500	SP07U420	SP07U275	10
STP690YN07(M)	400/690	420	740	320	840	1500	2500	1000	3000	SP07U420	SP07U320	10

4-POLE, 3-PHASE DELTA HIGH-LEG, 5-WIRE, INCLUDING N-G MODE

CATALOG NUMBER	NOMINAL VOLTAGE (VAC)	MAXIMUM CONTINUOUS OPERATING VOLTAGE (MCOV, VAC)				VOLTAGE PROTECTION RATING (VPR, VAC)				REPLACEMENT PLUG			I_n (kA)
		L-L/L-G	L-N/N-G	H-L/H-G	H-N	L-L/L-G	L-N/N-G	H-L/H-G	H-N	L1, L3	L2	N-G	
STP240HN07(M)	120/240	350	175	450	275	1200	600	1500	800	SP07U175	SP07U275	SP07U175	20
STP480HN07(M)	240/480	550/450	275/175	825/725	550	1500	800/600	2500/2000	1500	SP07U275	SP07U550	SP07U175	10

Courtesy of Steven Engineering, Inc - (800) 258-9200 - sales@steveneng.com - www.stevenengineering.com

SURGE PROTECTIVE DEVICE

DIN-RAIL MODULAR SPD FOR ANSI/UL 1449 TYPE 1 AND 2 APPLICATIONS

Surge-Trap® Modular Surge Protective Device (SPD) is a no-fuse, fail-safe surge suppressor featuring Mersen's patented TPMOV® technology inside. UL 1449 4th Edition approved, it is DIN-rail mountable featuring a fail-safe self-protected design, visual indicator, and a small footprint. A remote indicator option provides status to critical control circuitry. The Surge-Trap Modular SPD has a high short circuit rating and a thermally protected MOV, which eliminates the need for additional overcurrent protection devices.

FEATURES AND BENEFITS:

- Easy installation or retrofit
- DIN-rail mountable
- Fail-safe, self-protected design
- Remote indicator (optional)
- Visual indicator
- IP20 finger-safe design
- Small footprint
- No additional overcurrent protection devices required
- 2-year warranty

RATINGS:

- **Volts (U_n):** 120-690VAC
- **Nominal Discharge Current Rating (I_n):** 20kA
- **Surge Capacity (per phase and per mode):** 50kA
- **Short-Circuit Current Rating (SCCR):** 200kA

APPROVALS:

- ANSI/UL 1449 4th Edition, Type 1 Component Assembly SPD, File E210793
- ANSI/IEEE C62.41.1, C62.41.2, C62.45
- RoHS Compliant

Courtesy of Steven Engineering, Inc - (800) 258-9200 - sales@steveneng.com - www.stevenengineering.com

GENERAL PRODUCT SPECIFICATIONS

Mounting:	35mm DIN-Rail
Wire Range:	6-14AWG Solid / Stranded CU
Terminal Torque:	14.75 lbs-in
Degree of Protection:	IP 20
Flammability:	UL94 V0
Operating & Storage Temperature:	-40°C to + 85°C
Visual End of Life Indicator:	Visual Tab
Remote End of Life Indicator:	NO/NC Dry Contact
Frequency:	50-60 Hz
Response Time:	<25 ns

1-POLE, SINGLE-PHASE, 2-WIRE

CATALOG NUMBER	NOMINAL VOLTAGE (VAC)	MAXIMUM CONTINUOUS OPERATING VOLTAGE (MCOV, VAC)				VOLTAGE PROTECTION RATING (VPR, VAC)				I_n (kA)
		L-N	L-G	N-G	L-L	L-N	L-G	N-G	L-L	
ST1201PG(M)	120	180	180	-	-	500	500	-	-	20
ST2301PG(M)	240	270	270	-	-	800	800	-	-	20
ST2771PG(M)	277	320	320	-	-	900	900	-	-	20

2-POLE, SPLIT-PHASE, 3-WIRE

CATALOG NUMBER	NOMINAL VOLTAGE (VAC)	MAXIMUM CONTINUOUS OPERATING VOLTAGE (MCOV, VAC)				VOLTAGE PROTECTION RATING (VPR, VAC)				I_n (kA)
		L-N	L-G	N-G	L-L	L-N	L-G	N-G	L-L	
ST208SPG(M)	120/208	180	180	-	360	500	500	-	900	20
ST240SPG(M)	120/240	180	180	-	360	500	500	-	900	20
ST480SPG(M)	240/480	270	270	-	540	800	800	-	1500	20

3-POLE, 3-PHASE DELTA, 3-WIRE

CATALOG NUMBER	NOMINAL VOLTAGE (VAC)	MAXIMUM CONTINUOUS OPERATING VOLTAGE (MCOV, VAC)				VOLTAGE PROTECTION RATING (VPR, VAC)				I_n (kA)
		L-N	L-G	N-G	L-L	L-N	L-G	N-G	L-L	
ST2403PD(M)	240	-	-	-	270	-	-	-	1000	20
ST4803PD(M)	480	-	-	-	550	-	-	-	3000	20

3-POLE, 3-PHASE DELTA, 4-WIRE

CATALOG NUMBER	NOMINAL VOLTAGE (VAC)	MAXIMUM CONTINUOUS OPERATING VOLTAGE (MCOV, VAC)				VOLTAGE PROTECTION RATING (VPR, VAC)				I_n (kA)
		L-N	L-G	N-G	L-L	L-N	L-G	N-G	L-L	
ST2403PDG(M)	240	270	270	-	540	800	800	-	1500	20
ST4803PDG(M)	480	550	550	-	1100	1500	1500	-	3000	20

3-POLE, 3-PHASE WYE, 4-WIRE

CATALOG NUMBER	NOMINAL VOLTAGE (VAC)	MAXIMUM CONTINUOUS OPERATING VOLTAGE (MCOV, VAC)				VOLTAGE PROTECTION RATING (VPR, VAC)				I_n (kA)
		L-N	L-G	N-G	L-L	L-N	L-G	N-G	L-L	
ST2083PYG(M)	120/208	180	180	-	360	500	500	-	900	20
ST4803PYG(M)	277/480	320	320	-	640	900	900	-	1800	20
ST6003PYG(M)	347/600	420	420	-	840	1200	1200	-	2000	20
ST6903PYG(M)	400/690	510	510	-	1020	1500	1500	-	3000	20

4-POLE, 3-PHASE WYE, 5-WIRE, INCLUDING N-G MODE

CATALOG NUMBER	NOMINAL VOLTAGE (VAC)	MAXIMUM CONTINUOUS OPERATING VOLTAGE (MCOV, VAC)				VOLTAGE PROTECTION RATING (VPR, VAC)				I_n (kA)
		L-N	L-G	N-G	L-L	L-N	L-G	N-G	L-L	
ST2083PY(M)	120/208	180	360	180	360	500	900	500	900	20
ST4803PY(M)	277/480	320	470	150	640	1000	1500	500	1800	20
ST6003PY(M)	347/600	420	690	270	840	1500	2500	800	2500	20
ST6903PY(M)	400/690	1020	510	510	1020	3000	1500	1500	3000	20

FOR REMOTE INDICTATION, ADD "M" TO THE END OF THE PART NUMBER. EXAMPLE, ST4803PYM.
OMIT "M" TO ORDER WITHOUT REMOTE INDICATION. EXAMPLE, ST4803PY.

Courtesy of Steven Engineering, Inc - (800) 258-9200 - sales@steveneng.com - www.stevenengineering.com

DIMENSIONS - STP SERIES

POLES	A	
	IN	MM
1 Pole	0.69	17.5
2 Pole	1.38	35
3 Pole	2.07	52.5
4 Pole	2.76	70

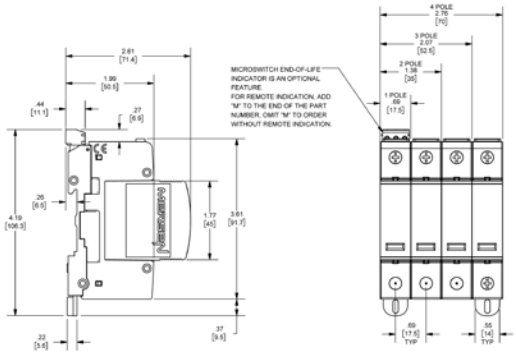

DIMENSIONS - ST SERIES

POLES	A	
	IN	MM
1 Pole	0.7	17.8
2 Pole	1.39	35.5
3 Pole	2.1	53.3
4 Pole	2.8	71

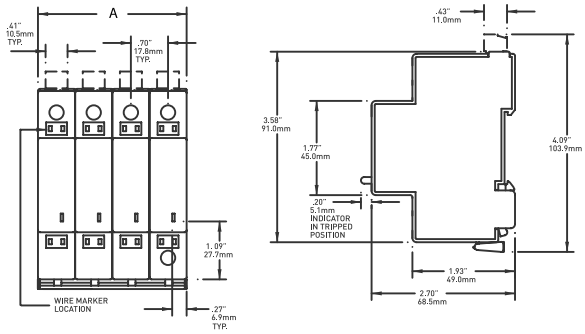

WIRING DIAGRAMS

1-POLE, SINGLE-PHASE, 2-WIRE

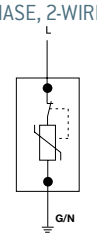

2-POLE, SPLIT-PHASE, 3-WIRE

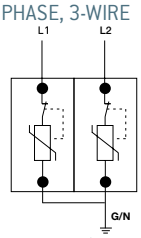

3-POLE, 3-PHASE DELTA, 3-WIRE

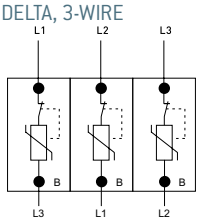

*ST Series only

3-POLE, 3-PHASE DELTA, 3-PHASE WYE, 4-WIRE

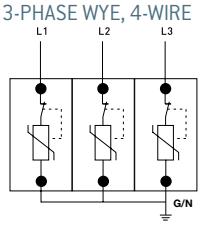

4-POLE, 3-PHASE WYE, 5-WIRE

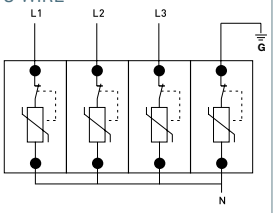

4-POLE, 3-PHASE DELTA HIGH-LEG, 5-WIRE

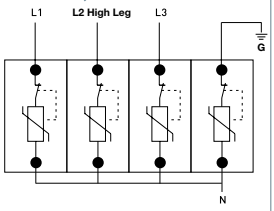

SINGLE PHASE
2 WIRE + GROUND

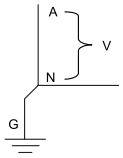

SPLIT PHASE
3 WIRE + GROUND

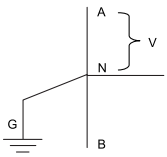

3 PHASE DELTA
3 WIRE + GROUND

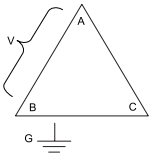

3 PHASE WYE
4 WIRE + GROUND

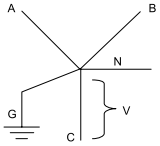

HI-LEG
GROUNDED DELTA

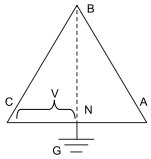

REMOTE STATUS INDICATOR

ST Series

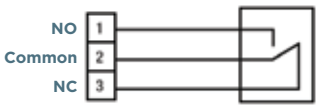

STP Series

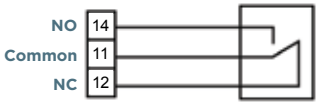

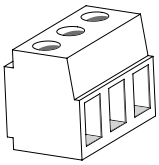

Signal Wire Range	#16 to #30 AWG
Terminal Torque	2.2 lb-in
Cont. between Comm + NO	Product Offline, Not Protected
Cont. between Comm + NC	Product Online, Protected
125 VAC - 3A max	

ST AND STP SERIES: FOR REMOTE INDICATION, ADD "M" TO THE END OF THE CATALOG NUMBER. FOR EXAMPLE, ST4803PYGM.

Courtesy of Steven Engineering, Inc - (800) 258-9200 - sales@steveneng.com - www.stevenengineering.com

SURGE PROTECTIVE DEVICE

DIN-RAIL PLUGGABLE SPD FOR PHOTOVOLTAIC APPLICATIONS

STPT2 40 PV is the series of devices that provide advanced overvoltage protection to photovoltaic systems by utilizing Mersen's optimized dynamic thermal disconnection system, which does not require additional overcurrent protection (back-up fuse) due to its high short-circuit withstand rating. These surge protective devices are suitable for all PV applications: large-scale, rooftop, and self-consumption (off-grid) DC installations.

REFERENCE NUMBER	CATALOG NUMBER	U_{CPV} [VDC]	U_p@I_n (8/20) [kV]	I_n (8/20) [kA]	SCCR [kA]	CARTRIDGE ID (L)
83020138	**STPT2-40K600V-YPV**	660	≤2.6	20	100	C40
83020139	**STPT2-40K600V-YPVM**	660	≤2.6	20	100	C40
83020140	**STPT2-40K1000V-YPV**	1060	≤4	20	50	C41
83020141	**STPT2-40K1000V-YPVM**	1060	≤4	20	50	C41
83020158	**STPT2-40K1500V-YPV**	1500	≤5	10	65	C42
83020159	**STPT2-40K1500V-YPVM**	1500	≤5	10	65	C42

DIMENSIONS

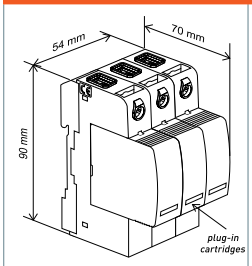

ELECTRICAL DIAGRAM

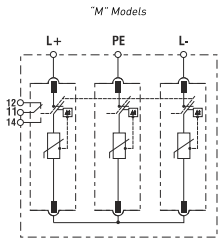

MICROSWITCH DIAGRAM

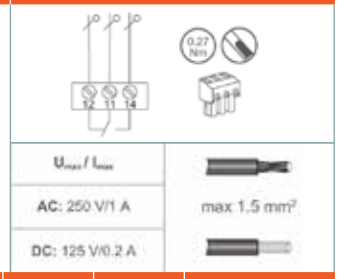

REPLACEMENT CARTRIDGES

REF. NUMBER	CATALOG NUMBER	NETWORK	U_{CPV} [VDC]	I_{max} (8/20) [kA]	I_n (8/20) @U_p [kA]	U_p@I_n (8/20) [kV]	CARTRIDGE ID.
83020005	**SP2-40K600V-PV**	PV	330	40	20	≤1.3	C40
83020006	**SP2-40K1000V-PV**	PV	530	40	20	≤2	C41
83020010	**SP2-40K1500V-PV**	PV	750	40	10	≤2,5	C42

RATINGS:

- **Volts (U_{cpv}):** 600-1500VDC
- **Nominal Discharge Current Rating (I_n):** 10-20kA
- **Surge Capacity (per phase and per mode):** 40kA
- **Short-Circuit Current Rating (SCCR):** 50-100kA

APPROVALS:

- ANSI/UL 1449 4th Edition, Type 2 Component Assembly, File E468946
- EN 50539-11
- UTE C 61740-51

Courtesy of Steven Engineering, Inc - (800) 258-9200 - sales@steveneng.com - www.stevenengineering.com

SURGE PROTECTIVE DEVICE

NEMA DEVICES FOR ANSI/ UL 1449 TYPE 1 AND 2 APPLICATIONS

The most compact of the STX series offering, the Surge-Trap® Type 1 STXH meets requirements for UL1449 4th Edition and is suitable for any 120/240VAC split phase application. The STXH Series SPD features TPMOV® technology inside making it the safest product available in its category. Its compact size, performance, and reliability are especially ideal for HVAC applications and direct mounting to air condition disconnect switches.

FEATURES AND BENEFITS:

- Designed with the industry leading Mersen TPMOV® Technology
- Compact footprint designed to mate with AC Disconnect Switches
- LED status indicator (ON = Good, OFF = Replace)
- NEMA 4X enclosure for outdoor or indoor use
- Fits 1/2″ knockouts with 18″ leads for easy installation
- For use in ANSI/UL Type 1 or 2 SPD installations
- 3 Modes of Protection (L-N, L-L)
- 3-year warranty

RATINGS:

- **Volts (U_n):** 120V Single Phase, 120/240VAC Split Phase
- **Nominal Discharge Current Rating (I_n):** 20kA
- **Surge Capacity (per phase and per mode):** 50kA
- **Short-Circuit Current Rating (SCCR):** 200kA

APPROVALS:

- ANSI/UL 1449 4th Edition, Type 1 SPD, File E210793
- CSA C22.2, Type 1 SPD
- ANSI/IEEE C62.41.1, C62.41.2, C62.45
- UL96A Lightning Protection
- RoHS Compliant

Courtesy of Steven Engineering, Inc - (800) 258-9200 - sales@steveneng.com - www.steveneng.com

GENERAL PRODUCT SPECIFICATIONS

Mounting:	1/2" – 14 threaded hub Includes sealing locking washer	Operating & Storage Temperature:	-40°C to +85°C
Wiring:	Pre-wired 18" 10AWG	Relative Humidity Range:	0 to 95% non-condensing
Enclosure:	NEMA 4X Non-metallic	Visual End-of-Life Indicator:	GREEN = OK, OUT = REPLACE
Flammability:	UL94-5VA	Frequency:	50-60Hz

CATALOG NUMBER (INCLUDES SUFFIXES*)	SYSTEM VOLTAGE AND CONFIGURATION	I_n	MAXIMUM CONTINUOUS OPERATING VOLTAGE (MCOV, U_c)				VOLTAGE PROTECTION RATING (VPR) (UL 1449, 6kA, 3kV)			
			L-N	L-G	L-L	N-G	L-N	L-G	L-L	N-G
STXH120P05	120V Single Phase (2W)	20kA	150	-	-	-	600	-	-	-
STXH120P05N	120V Single Phase (2W+G)	20kA	150	300	-	150	600	1000	-	600
STXH240S05	240/120V Split Phase (3W)	20kA	150	-	300	-	600	-	1000	-

LED Status Indicator

Visible from side profile through light tube in cover

1/2"-14 Mounting Hub

Dimensions and Mounting Configurations

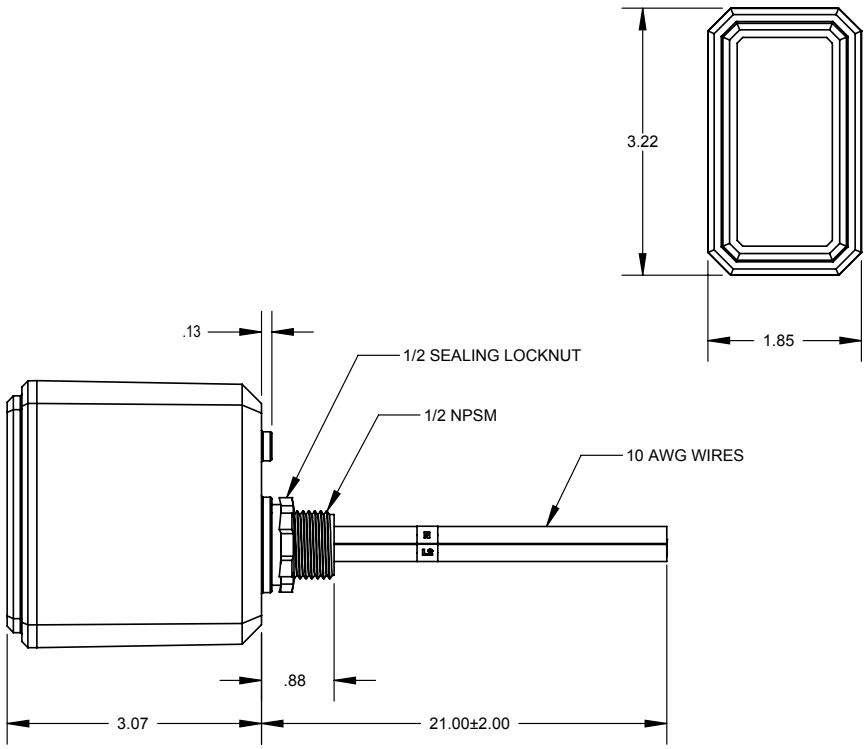

Ideal for Air Conditioning Disconnect Applications

Courtesy of Steven Engineering, Inc - (800) 258-9200 - sales@steveneng.com - www.stevenengineering.com

SURGE PROTECTIVE DEVICE

NEMA DEVICES FOR ANSI/ UL 1449 TYPE 1 AND 2 APPLICATIONS

The most popular range in the STX series offering, the Surge-Trap® Type 1 STXR meets requirements for UL1449 4th Edition and is ideal for the replacement of obsolete surge arrestors. The STXR Series SPDs feature TPMOV® technology inside, making them the safest product available. With a small, compact design and line or load installation flexibility, the STXR series is the perfect fit for branch panel and/or individual equipment protection.

FEATURES AND BENEFITS:

- Designed with the industry leading Mersen TPMOV® Technology
- LED status indicator (ON = Good, OFF = Replace)
- NEMA 4X enclosure for outdoor or indoor use
- Fits 3/4″ knockouts with 3′ leads for easy installation
- Optional mounting bracket for surface mount applications
- Optional audible alarm and remote dry contacts
- For use in ANSI/UL Type 1 or 2 SPD installations
- Up to 10 modes of Protection (L-N, L-L, L-G optional, N-G optional)
- 5-year warranty

RATINGS:

- **Volts (U_n):** 120-600VAC
- **Nominal Discharge Current Rating (I_n):** 10-20kA
- **Surge Capacity (per phase and per mode):** 50kA
- **Short-Circuit Current Rating (SCCR):** 200kA

APPROVALS:

- ANSI/UL 1449 4th Edition, Type 1 SPD, File E210793
- CSA C22.2, Type 1 SPD
- ANSI/IEEE C62.41.1, C62.41.2, C62.45
- UL96A Lightning Protection
- RoHS Compliant

Courtesy of Steven Engineering, Inc - (800) 258-9200 - sales@steveneng.com - www.steveneng.com

GENERAL PRODUCT SPECIFICATIONS

Mounting:	3/4" – 14 threaded hub Includes locking washer	Operating & Storage Temperature:	-40°C to +85°C
Wiring:	Pre-wired 3' (1m) 10AWG	Relative Humidity Range:	0 to 95% non-condensing
Enclosure:	NEMA 4X Non-metallic	Visual End-of-Life Indicator:	GREEN = OK, OUT = REPLACE
Flammability:	UL94-5VA	Frequency:	50-60Hz

CATALOG NUMBER (INCLUDES SUFFIXES*)	SYSTEM VOLTAGE AND CONFIGURATION	I_n	MAXIMUM CONTINUOUS OPERATING VOLTAGE (MCOV, U_c)				VOLTAGE PROTECTION RATING (VPR) (UL 1449, 6kA, 3kV)			
			L-N	L-G	L-L	N-G*	L-N	L-G	L-L	N-G*
STXR120P05	120V Single Phase	20kA	150	300	-	150	700	1200	-	600
STXR240P05	240V Single Phase	20kA	320	640	-	320	1200	1800	-	1000
STXR240S05	240/120V Split Phase	20kA	150	300	300	150	700	1200	1200	600
STXR480S05	480/240V Split Phase	20kA	320	640	640	320	1200	1800	2000	1000
STXR208Y05	208/120V 3-Phase WYE	20kA	150	300	300	150	700	1200	1200	600
STXR380Y05	380/220V 3-Phase WYE	20kA	320	640	640	320	1200	1800	2000	1000
STXR480Y05	480/277V 3-Phase WYE	20kA	320	470	640	150	1200	1800	2000	700
STXR600Y05	600/347V 3-Phase WYE	20kA	420	690	840	270	1500	2500	2500	1000
STXR240D05	240V 3-Phase DELTA	20kA	-	320	640	-	-	1200	2000	-
STXR480D05	480V 3-Phase DELTA & HRG WYE	10kA	-	550	1100	-	-	1800	3000	-
STXR600D05	600V 3-Phase DELTA	20kA	-	690	840	-	-	2000	2500	-
			L-N/ HL-N	L-G/ HL-G	L-L/ HL-L	N-G*	L-N/ HL-N	L-G/ HL-G	L-L/ HL-L	N-G*
STXR240H05	240/120V Hi-Leg DELTA	20kA	150/270	300/420	300/420	150	700/1.2k	1.2k/1.2k	2k/2k	600
STXR480H05	480/240V Hi-Leg DELTA	10kA	320/550	320/550	640/870	320	1.2/1.8k	1.2/1.8k	2k/2.5k	1000

*Suffixes:
Add Suffix "N" for N-G protection. Example: STXR208Y05N
Add Suffix "A" for Audible Alarm and Dry Contact. Example: STXR208Y05A
For both options, Example: STXR208Y05AN

CATALOG NUMBER	ACCESSORY DESCRIPTION
STXRMBK	STXR Mounting Bracket Kit. Includes (1) 90 degree bracket and (2) mounting screws

Optional Form C Dry Contact and Audible Alarm (Suffix "A")

Form C Dry Contact (Pre-wired 3' 18AWG)
125VAC, 1A Resistive
30VDC, 2A General Purpose

Red = Normally Closed
Gray = Common
Blue = Normally Open

Audible Alarm
Alarm sounds when any protection is lost

3/4"-14 Mounting Hub

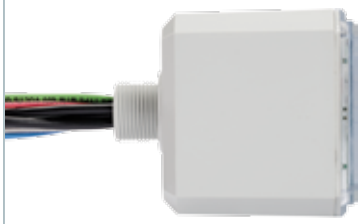

Dimensions and Mounting Configurations

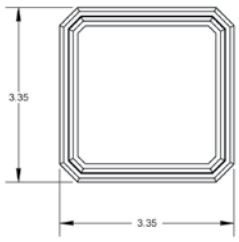

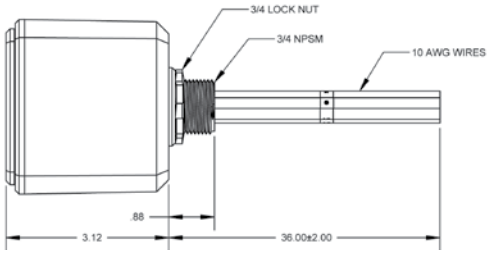

Bracket Mount Option

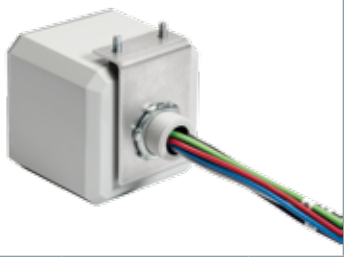

Courtesy of Steven Engineering, Inc - (800) 258-9200 - sales@steveneng.com - www.stevenengineering.com

SURGE PROTECTIVE DEVICE

NEMA DEVICES FOR ANSI/ UL 1449 TYPE 1 AND 2 APPLICATIONS

The Surge-Trap® Type 1 STXP Series offers advanced performance and features over the STXR series including higher surge capacity and phase LED status indicators. The STXP meets requirements for UL1449 4th Edition and has been designed for additional mounting flexibility including mounting feet and flush-mount capability. The STXP features TPMOV® technology inside making it the safest product available. Installation can be done on the line or load side of a panel. The STXP is the perfect fit from service entrance all the way down to an important machine specific control panel.

FEATURES AND BENEFITS:

- Designed with the industry leading Mersen TPMOV® Technology (internally fused)
- Enhanced 100kA surge capacity for longer life and higher single impulse withstand
- LED status indicator (ON = Good, OFF = Replace)
- LED phase loss indicators (ON = Operational, OFF = Maintenance Required)
- NEMA 4X enclosure for outdoor or indoor use
- Mounting hub and mounting feet for installation flexibility
- Pre-wired with 3′ leads for easy installation
- Optional flush-mount kit for in-wall installation
- Optional audible alarm and remote dry contacts
- For use in ANSI/UL Type 1 or 2 SPD installations
- Up to 10 Modes of Protection (L-N, L-L, L-G, N-G)
- 10-year warranty

RATINGS:

- **Volts (U_n):** 120-600VAC
- **Nominal Discharge Current Rating (I_n):** 20kA
- **Surge Capacity (per phase):** 100kA
- **Short-Circuit Current Rating (SCCR):** 200kA

APPROVALS:

- ANSI/UL 1449 4th Edition, Type 1 SPD, File E210793
- CSA C22.2, Type 1 SPD
- ANSI/IEEE C62.41.1, C62.41.2, C62.45
- UL96A Lightning Protection
- RoHS Compliant

Courtesy of Steven Engineering, Inc - (800) 258-9200 - sales@steveneng.com - www.steveneng.com

GENERAL PRODUCT SPECIFICATIONS

Mounting:	Female 3/4" – 14 threaded hub Mounting feet with 0.125" diameter holes	Operating & Storage Temperature:	-40°C to +85°C
Wiring:	Pre-wired 3' (1m) 10AWG	Relative Humidity Range:	0 to 95% non-condensing
Enclosure:	NEMA 4X Non-metallic	Visual End-of-Life Indicator:	GREEN = OK, OUT = REPLACE
Flammability:	UL94-5VA	Frequency:	50-60Hz

CATALOG NUMBER (INCLUDES SUFFIXES*)	SYSTEM VOLTAGE AND CONFIGURATION	I_n	MAXIMUM CONTINUOUS OPERATING VOLTAGE (MCOV, U_c)				VOLTAGE PROTECTION RATING (VPR) (UL 1449, 6kA, 3kV)			
			L-N	L-G	L-L	N-G*	L-N	L-G	L-L	N-G*
STXP120P10	120V Single Phase	20kA	150	150	-	150	700	700	-	600
STXP240P10	240V Single Phase	20kA	320	320	-	150	1200	1200	-	700
STXP240S10	240/120V Split Phase	20kA	150	150	300	150	700	700	1000	600
STXP480S10	480/240V Split Phase	20kA	320	320	640	150	1200	1200	2000	600
STXP208Y10	208/120V 3-Phase WYE	20kA	150	150	300	150	700	700	1000	600
STXP380Y10	380/220V 3-Phase WYE	20kA	320	320	640	150	1200	1200	2000	600
STXP480Y10	480/277V 3-Phase WYE	20kA	320	320	640	150	1200	1200	2000	600
STXP600Y10	600/347V 3-Phase WYE	20kA	420	420	840	275	1200	1500	2000	1000
STXP240D10	240V 3-Phase DELTA	20kA	-	320	640	-	-	1200	2000	-
STXP480D10	480V 3-Phase DELTA & HRG WYE	20kA	-	550	1100	-	-	1800	3000	-
STXP600D05 (50kA)	600V 3-Phase DELTA	20kA	-	690	695	-	-	2000	2500	-
STXP480B10	480V B Corner Ground DELTA	20kA	-	550	1100	-	-	1800	3000	-
			L-N/ HL-N	L-G/ HL-G	L-L/ HL-L	N-G*	L-N/ HL-N	L-G/ HL-G	L-L/ HL-L	N-G*
STXP240H10	240/120V Hi-Leg DELTA	20kA	150/275	150/275	300/425	150	700/1.2k	700/1.2k	1.0k/2000	600
STXP480H10	480/240V Hi-Leg DELTA	20kA	320/550	320/550	640/870	320	1.2k/1.8k	1.2k/1.8k	1.8k/2.5k	1000

*Suffixes: Add Suffix "A" for Audible Alarm and Dry Contact. Example: STXP208Y10A
Add Suffix "L" for long leads (9 ft)

CATALOG NO.	ACCESSORY DESCRIPTION
STXPFMK	STXP Flush Mount Kit. Includes (1) mounting plate and (3) mounting screws

Optional Form C Dry Contact and Audible Alarm (Suffix "A")

Form C Dry Contact (Pre-wired 3' 18AWG)
125VAC, 1A Resistive
30VDC, 2A General Purpose

Red = Normally Closed
Gray = Common
Blue = Normally Open

Audible Alarm
Alarm sounds when any protection is lost

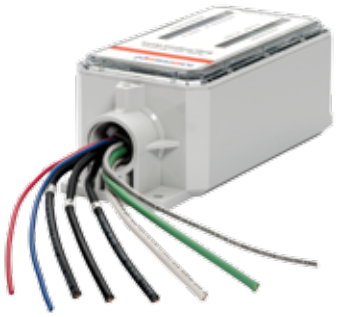

3/4"-14 Female Mounting Hub

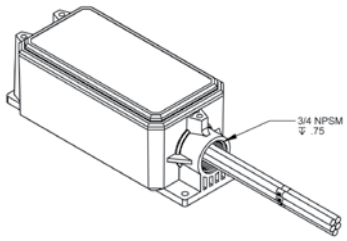

Dimensions and Mounting Configurations

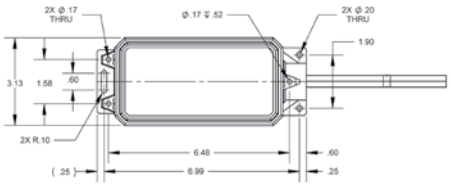

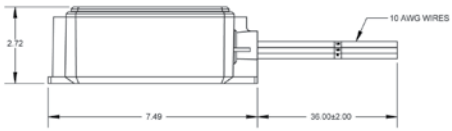

Flush Mount Option

Courtesy of Steven Engineering, Inc - (800) 258-9200 - sales@steveneng.com - www.stevenengineering.com

SURGE PROTECTIVE DEVICE

NEMA DEVICES FOR ANSI/ UL 1449 TYPE 1 AND 2 APPLICATIONS

The most advanced of the STX series, the Surge-Trap® Type 1 STXT Series comes standard with EMI/RFI Filtering and surge capacities up to 200kA. The STXT features TPMOV® technology inside, making it the safest product available. With line or load side installation flexibility, this unit is a great fit from the service entrance all the way down to each distribution and/or branch panel.

FEATURES AND BENEFITS:

- Designed with the industry leading Mersen TPMOV® Technology (internally fused)
- Premium 200kA surge capacity for longer life and higher single impulse withstand
- Includes EMI/RFI filter for cleaner attenuation
- LED status indicator (ON = Good, OFF = Replace)
- LED phase loss indicators (ON = Operational, OFF = Maintenance Required)
- NEMA 4X enclosure for outdoor or indoor use
- Mounting hub and mounting feet for installation flexibility
- Optional audible alarm and remote dry contacts
- For use in ANSI/UL Type 1 or 2 SPD installations
- Up to 10 Modes of Protection (L-N, L-L, L-G, N-G)
- 10-year warranty

RATINGS:

- **Volts (U_n):** 120-600VAC
- **Nominal Discharge Current Rating (I_n):** 20kA
- **Surge Capacity (per phase):** 100kA or 200kA
- **Short-Circuit Current Rating (SCCR):** 200kA
- **EMI/RFI Filter:** Up to -50dB from 10kHz to 100MHz

APPROVALS:

- ANSI/UL 1449 4th Edition, Type 1 SPD, File E210793
- CSA C22.2, Type 1 SPD
- ANSI/IEEE C62.41.1, C62.41.2, C62.45
- UL96A Lightning Protection
- RoHS Compliant

Courtesy of Steven Engineering, Inc - (800) 258-9200 - sales@steveneng.com - www.steveneng.com

GENERAL PRODUCT SPECIFICATIONS

Mounting:	Female 3/4" – 14 threaded hub Mounting feet with 0.25" diameter holes	Operating & Storage Temperature:	-40°C to +85°C
Wiring:	Wire Lugs for 8 AWG copper	Relative Humidity Range:	0 to 95% non-condensing
Enclosure:	NEMA 4X Non-metallic	Visual End-of-Life Indicator:	GREEN = OK, OUT = REPLACE
Flammability:	UL94-5VA	Frequency:	50-60Hz

CATALOG NUMBER (INCLUDES SUFFIXES*)	SYSTEM VOLTAGE AND CONFIGURATION	I_n	MAXIMUM CONTINUOUS OPERATING VOLTAGE (MCOV, U_c)				VOLTAGE PROTECTION RATING (VPR) (UL 1449, 6kA, 3kV)			
			L-N	L-G	L-L	N-G*	L-N	L-G	L-L	N-G*
STXT120P20	120V Single Phase	20kA	150	150	-	150	700	700	-	700
STXT240P20	240V Single Phase	20kA	320	320	-	150	1200	1200	-	700
STXT240S20	240/120V Split Phase	20kA	150	150	300	150	700	700	1000	700
STXT480S20	480/240V Split Phase	20kA	320	320	640	150	1200	1200	2000	700
STXT208Y20	208/120V 3-Phase WYE	20kA	150	150	300	150	700	700	1000	700
STXT380Y20	380/220V 3-Phase WYE	20kA	320	320	640	150	1200	1200	2000	700
STXT480Y20	480/277V 3-Phase WYE	20kA	320	320	640	150	1200	1200	2000	700
STXT600Y20	600/347V 3-Phase WYE	20kA	420	420	840	275	1500	1500	2500	1200
STXT240D20	240V 3-Phase DELTA	20kA	-	320	640	-	-	1200	2000	-
STXT480D20	480V 3-Phase DELTA & HRG WYE	20kA	-	550	1100	-	-	1800	3000	-
STXT600D10	600V 3-Phase DELTA	20kA	-	695	840	-	-	2500	2500	-
STXT480B20	480V B Corner Ground DELTA	20kA	-	550	1100	-	-	1800	4000	-
			L-N/ HL-N	L-G/ HL-G	L-L/ HL-L	N-G*	L-N/ HL-N	L-G/ HL-G	L-L/ HL-L	N-G*
STXT240H20	240/120V Hi-Leg DELTA	20kA	150/275	150/275	300/425	150	700/1.2k	700/1.2k	1.0k/2000	700
STXT480H20	480/240V Hi-Leg DELTA	20kA	320/550	320/550	640/870	320	1.2k/1.8k	1.2k/1.8k	2.0k/2.5k	1200

*Suffixes: Add Suffix "A" for Audible Alarm and Dry Contact. Example: STXP208Y10A
For 100kA Surge Capacity models, substitute "10" for "20." Example: STXT208Y10

Optional Form C Dry Contact and Audible Alarm (Suffix "A")

Form C Dry Contact
125VAC, 1A Resistive
30VDC, 2A General Purpose

COM = Common
NO = Normally Open
NC = Normally Closed

Audible Alarm
Alarm sounds when any protection is lost

3/4"-14 Female Mounting Hub

Dimensions and Mounting Configurations

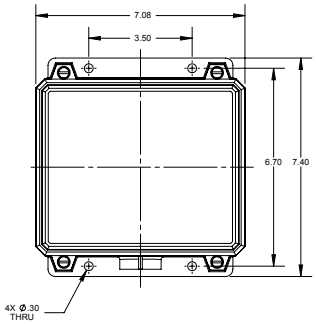

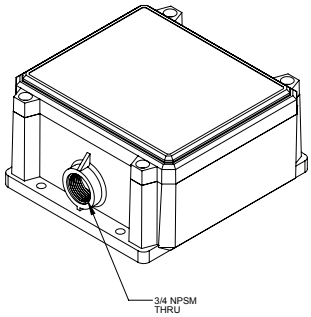

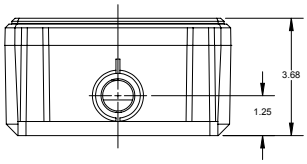

Courtesy of Steven Engineering, Inc - (800) 258-9200 - sales@steveneng.com - www.stevenengineering.com

SURGE PROTECTIVE DEVICE

NEMA DEVICES FOR ANSI/ UL 1449 TYPE 1 AND 2 APPLICATIONS

The Mersen flagship for facility-wide protection, The Surge-Trap® Type 1 STZ Series features surge capacities up to 450kA designed with Mersen's industry leading TPMOV® technology inside making it the safest and most reliable product on the market. Options include surge counter, through-the-door disconnect switch, audible alarm, dry contact, and EMI/RFI filtering. This external SPD can be installed on the line or load side of the service entrance.

FEATURES AND BENEFITS:

- Type 1 SPD for service entrance and facility-wide protection
- Ideal for new construction bid projects and specification as well as existing facility retrofit
- Designed with the industry leading Mersen TPMOV® Technology (internally fused)
- Standard features include EMI/RFI filter, surge counter with reset, audible alarm and dry contacts with silence
- Field replaceable SPD module
- SPD module can be rotated 90 degrees depending on desired cable entry location
- Available with or without disconnect switch
- For use in ANSI/UL Type 1 or 2 SPD installations
- Up to 10 Modes of Protection (L-N, L-L, L-G, N-G)
- 15-year warranty

RATINGS:

- **Volts (U_n):** 240-480VAC
- **Nominal Discharge Current Rating (I_n):** 20kA
- **Surge Capacity (per phase):** 100, 200, 300. 450kA
- **Short-Circuit Current Rating (SCCR):** 200kA
- **EMI/RFI Filter:** Up to -50dB from 10kHz to 100MHz

APPROVALS:

- ANSI/UL 1449 4th Edition, Type 1 SPD, File E210793
- CSA C22.2, Type 1 SPD
- ANSI/IEEE C62.41.1, C62.41.2, C62.45
- UL96A Lightning Protection
- RoHS Compliant

Courtesy of Steven Engineering, Inc - (800) 258-9200 - sales@steveneng.com - www.stevenengineering.com

GENERAL PRODUCT SPECIFICATIONS

Mounting:	Mounting feet	Relative Humidity Range:	0 to 95% non-condensing
Wiring:	Wire Lugs for 6-10 AWG copper	Visual LED End-of-Life Indicator:	Green = 67 to 100% Life
Enclosure:	NEMA 4 or NEMA 4X stainless steel		Yellow = 34 to 66% Life
Flammability:	UL94-5VA		Red = 0 to 33% Life
Operating & Storage Temperature:	-40°C to +85°C	Frequency:	50-60Hz

CATALOG NUMBER (INCLUDES SUFFIXES*)	SYSTEM VOLTAGE AND CONFIGURATION	I_n	MAXIMUM CONTINUOUS OPERATING VOLTAGE (MCOV, U_c)				VOLTAGE PROTECTION RATING (VPR) (UL 1449, 6kA, 3kV)			
			L-N	L-G	L-L	N-G*	L-N	L-G	L-L	N-G*
STZ240S…	240/120V Split Phase	20kA	150	150	300	150	700	700	1000	700
STZ208Y…	208/120V 3-Phase WYE	20kA	150	150	300	150	700	700	1000	700
STZ480Y…	480/277V 3-Phase WYE	20kA	320	320	640	150	1200	1200	2000	700
STZ240D…	240V 3-Phase DELTA	20kA	-	320	640	-	-	1200	2000	-
STZ480D…	480V 3-Phase DELTA & HRG WYE	20kA	-	550	1100	-	-	1800	3000	-

*Part Number Selector (Don't see what you need? Please contact the factory)

STZ	480Y	30	B	1	T
Model Series	**Voltage and System Configuration**	**Surge Capacity**	**Package**	**Enclosure**	**Disconnect**
STZ	**240S:** 240/120V Split **208Y:** 208/120V WYE **480Y:** 480/277V WYE **240D:** 240V DELTA **480D:** 480V DELTA & HRG WYE	**10:** 100kA **20:** 200kA **30:** 300kA **45:** 450kA	**B: Standard** LED Status Indicators Phase Loss Indication Audible Alarm Form C Dry Contacts EMI/RFI Filter Surge Counter	**1:** NEMA 1/12/3R/4 **X:** NEMA 4X **Q:** Field-replaceable unit	**BLANK:** None **T:** UL98 Switch thru the door handle **U:** UL98 Switch for field-replaceable unit

Dimensions and Mounting Configurations

Without Disconnect Switch
12x12 Enclosure

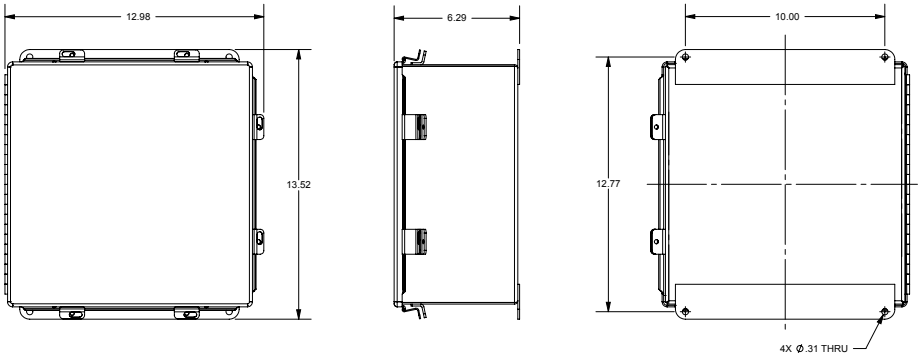

With Disconnect Switch
16x12 Enclosure

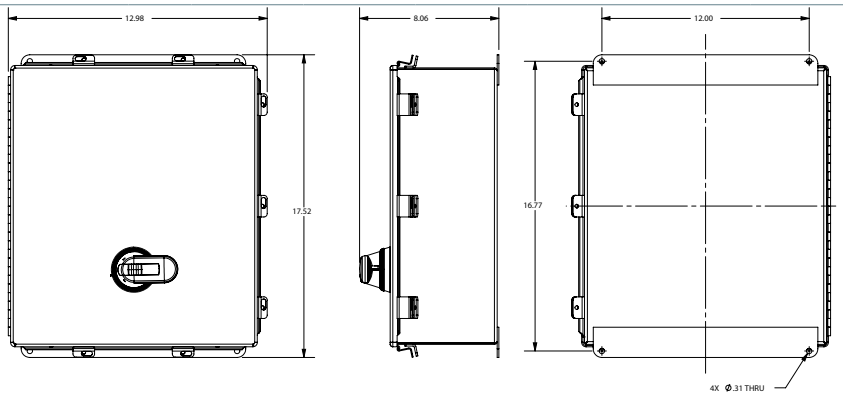

Courtesy of Steven Engineering, Inc - (800) 258-9200 - sales@steveneng.com - www.stevenengineering.com

TPMOV® (THERMALLY PROTECTED MOV) TECHNOLOGY
TPMOV AND TPMOV7 SERIES

SURGE PROTECTIVE DEVICE

COMPONENT SPD FOR OEM DESIGN AND BUILD

Mersen's patented TPMOV technology eliminates common failure modes that occur in the field with standard metal oxide varistors. Internally the TPMOV is comprised of a voltage clamping device and a disconnecting apparatus that monitors the status of the metal oxide disk, making the TPMOV a fail-safe device. In the event of an overvoltage breakdown, the metal oxide disc is securely disconnected from the system power by an arc shield. Upon failure, the TPMOV is also equipped with a visual pin indicator as well as a normally open micro-switch, providing remote indication if applicable.

TPMOV7: 50% more surge capacity, Same footprint

The TPMOV7 is rated for **75kA - 8/20µs peak surge current** and is available for maximum continuous operating voltages (MCOV) from 150V to 320VAC.

FEATURES AND BENEFITS:

- Industry-leading, patented TPMOV technology available in 50kA and 75kA surge capacities
- Consistent footprint with 25–40mm MOVs
- Built-in visual/remote indication optional
- Wave solderable
- No additional overcurrent protective device (fuses) required

RATINGS:

- **Volts (U_n):** 150-550VAC
- **Nominal Discharge Current Rating (I_n):** 20kA
- **Surge Capacity:** 50kA, 75kA
- **Short-Circuit Current Rating (SCCR):** 200kA

APPROVALS:

- ANSI/UL 1449 4th Edition, Type 1 Component Assembly SPD, File E210793
- RoHS Compliant

Courtesy of Steven Engineering, Inc - (800) 258-9200 - sales@steveneng.com - www.stevenengineering.com

CATALOG NUMBER (INCLUDES SUFFIXES*)	MAXIMUM CONTINUOUS OPERATING VOLTAGE (MCOV)	VOLTAGE PROTECTION RATING (VPR)	NOMINAL DISCHARGE CURRENT (kA)	OPERATING TEMPERATURE	TPMOV DIMENSION A (INCHES)
150TPMOV (7)	150VAC	600	20	-40°C to +85°C	0.485
180TPMOV	180VAC	800	20	-40°C to +85°C	0.485
270TPMOV	275VAC	800	20	-40°C to +85°C	0.495
320TPMOV (7)	320VAC	1000	20	-40°C to +85°C	0.51
420TPMOV	420VAC	1500	20	-40°C to +85°C	0.54
510TPMOV	510VAC	1500	20	-40°C to +85°C	0.54
550TPMOV	550VAC	1500	20	-40°C to +85°C	0.545

CATALOG - ORDERING SYSTEM (TPMOV)

150
Maximum Continuous Operating Voltage (MCOV)

150: 150VAC
180: 180VAC
270: 275VAC
320: 320VAC
420: 420VAC
510: 510VAC
550: 550VAC

TPMOV
Model Series

TPMOV: Thermally Protected MOV

7
Surge Capacity

BLANK: 50kA
7: 75kA

SL
Mechanical Options

Suffix	PCB Leads	Tact Switch	Visual Tabs	Pkg Qty
Blank	No	Yes	Yes	10
S	Yes	Yes	No	10
SL	Yes	Yes	No	500
ST	Yes	Yes	Yes	10
SLT	Yes	Yes	Yes	500
HV	No	Yes-HV	Yes	10
S-HV	Yes	Yes-HV	Yes	10
SL-HV	Yes	Yes-HV	Yes	500

* For details regarding HV microswitch please consult factory

Dimensional Drawing of TPMOV

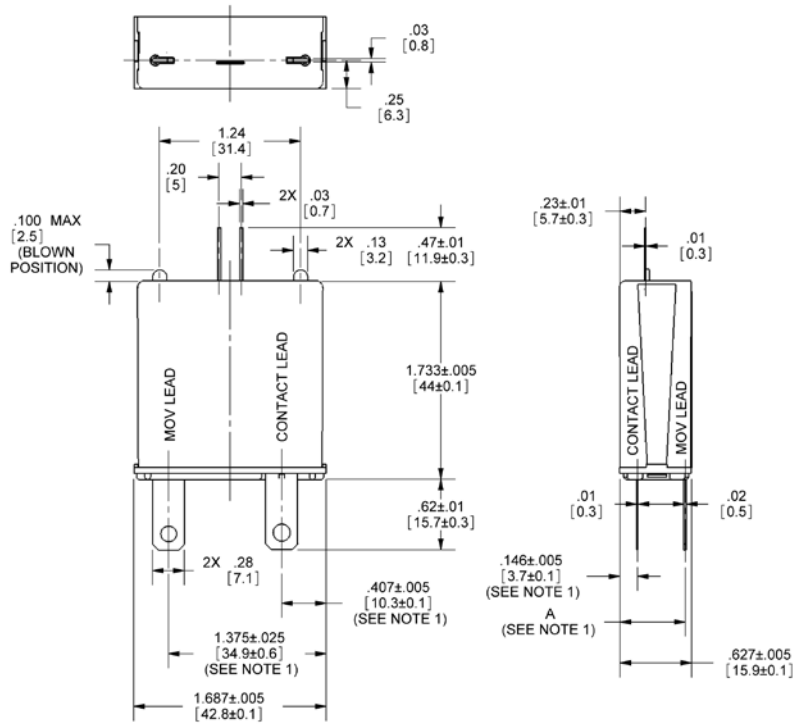

Board Layout Dimensions

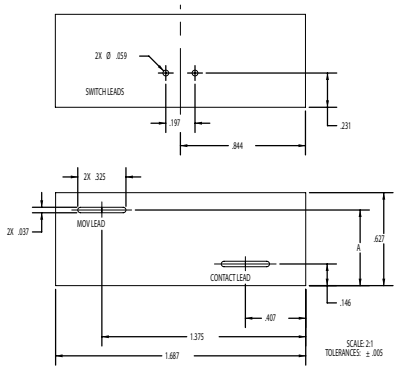

VOLTAGE	A DIMENSION
550	0.545
420/510	0.54
320	0.51
270	0.495
150/180	0.485

Courtesy of Steven Engineering, Inc - (800) 258-9200 - sales@steveneng.com - www.stevenengineering.com

TPMOV® (THERMALLY PROTECTED MOV) TECHNOLOGY
25TPMOV SERIES

SURGE PROTECTIVE DEVICE

COMPONENT SPD FOR OEM DESIGN AND BUILD

30% SMALLER FOOTPRINT – SAME RELIABLE TPMOV TECHNOLOGY

Mersen's patented TPMOV technology eliminates common failure modes that occur in the field with standard metal oxide varistors. Internally the TPMOV is comprised of a voltage clamping device and a disconnecting apparatus that monitors the status of the metal oxide disc making the TPMOV a fail-safe device. Upon failure the TPMOV is also equipped with a visual pin indicator as well as a normally open micro-switch providing remote indication, if applicable. Mersen's 25TPMOV is rated for 25kA - 8/20µs peak surge current and is available for maximum continuous operating voltages (MCOV) from 150V to 320VAC.

FEATURES AND BENEFITS:

- Industry leading, patented, TPMOV® Technology
- Now available in a standard 25mm MOV footprint
- Upstream overcurrent protection not required
- Optional built-in end-of-life indication
- Type 1 SPD allows for use in all types of SPD applications

RATINGS:

- **Volts (U_n):** 150-320VAC
- **Nominal Discharge Current Rating (I_n):** 10kA
- **Surge Capacity:** 25kA
- **Short-Circuit Current Rating (SCCR):** 200kA

APPROVALS:

- ANSI/UL 1449 4th Edition, Type 1 SPD, File E210793
- RoHS Compliant

Courtesy of Steven Engineering, Inc - (800) 258-9200 - sales@steveneng.com - www.stevenengineering.com

GENERAL PRODUCT SPECIFICATIONS

Mounting: short leads for PCB
Packaging (MOQ): 50 pcs
Mechanical End-of-Life Indicator: N/C Tact Switch

Single Impulse Surge Capacity: 25kA (8/20µs)
Nominal Discharge Current Rating: 10kA
Operating & Storage Temperature: -40°C to +85°C
Frequency: 50-60Hz

CATALOG NUMBER	I_n	SURGE CAPACITY	SCCR	MAXIMUM CONTINUOUS OPERATING VOLTAGE (MCOV, Uc)	VOLTAGE PROTECTION RATING (VPR) (UL 1449, 6kA, 3kV)
25TPMOVSL150	10kA	25kA	200kA	150VAC	600V
25TPMOVSL320	10kA	25kA	200kA	320VAC	1000V

Dimensions

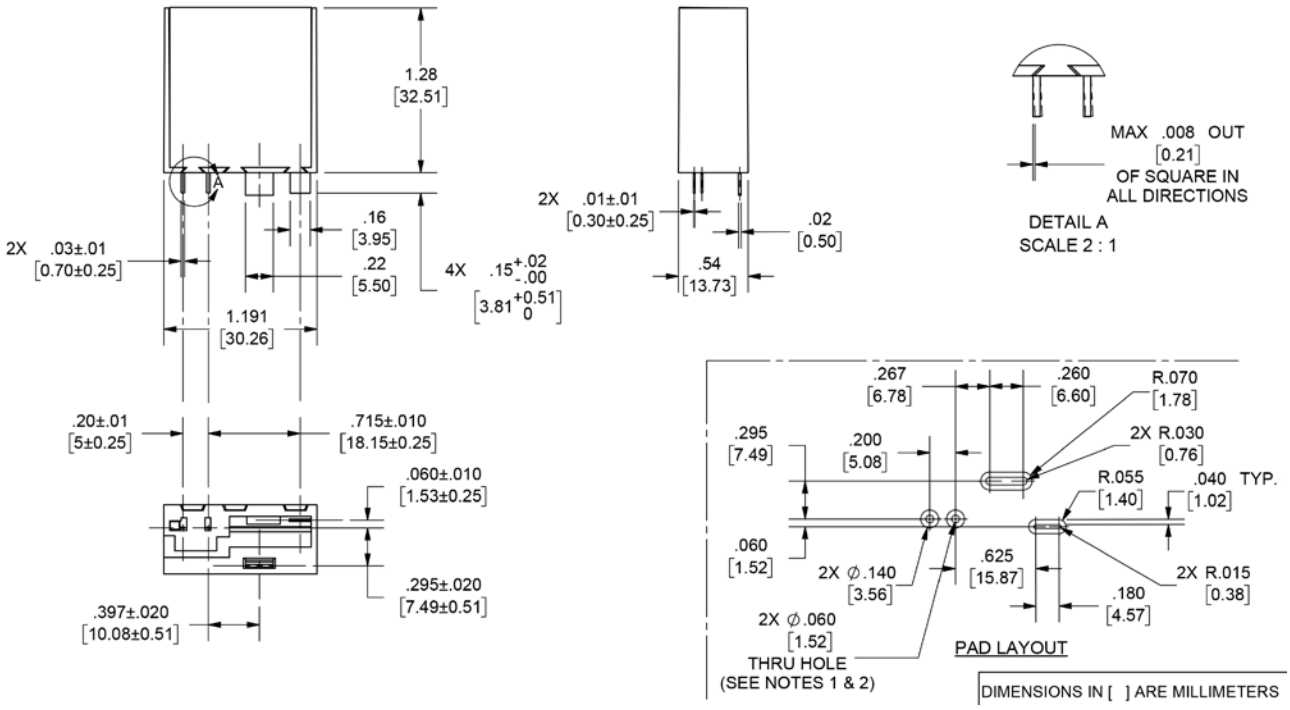

Courtesy of Steven Engineering, Inc - (800) 258-9200 - sales@steveneng.com - www.stevenengineering.com

Mersen
Expertise, our source of energy

MERSEN IS A GLOBAL EXPERT IN ELECTRICAL POWER AND ADVANCED MATERIALS

NORTH AMERICA

USA
Mersen USA
374 Merrimac Street
Newburyport, MA 01950
T : +1 978 462 6662

CANADA
Mersen Canada
6200 Kestrel Road
Mississauga, ON L5T 1Z1
T : +1 416 252 9371

EUROPE

FRANCE
Mersen France SB S.A.S.
15 rue Jacques de Vaucanson
F-69720 Saint-Bonnet-de-Mure
T : +33 4 72 22 66 11

ASIA

CHINA
Mersen Shanghai
No.55-A6. Shu Shan Road
Songjiang 201611 Shanghai
T : +86 21 6760 2388

EP.MERSEN.COM

BR-SURGE-TRAP-UL-001 | 1.20 | Printex | 4000 | ©Mersen 2020. All rights reserved.

Courtesy of Steven Engineering, Inc - (800) 258-9200 - sales@steveneng.com - www.stevenengineering.com