Diaphragm Type Air Operated 3-Way Valve

Series LVQ200Z

How to Order

LVQ 2 00 – * 07 *

Body Class

Class	Orifice Size
2	ø6

Integral Fitting

Z	LQ3 PFA Compression Nut
Y	LQ3 PVDF Compression Nut

Fitting

Symbol	Tube O.D.	Class
07	1/4" x 5/32"	2

Pilot Port Type

Nil	LQ3 Integral Fitting	Tube Outside Diameter 1/8"
N	Thread Type	NPT 1/8"

Dimensions

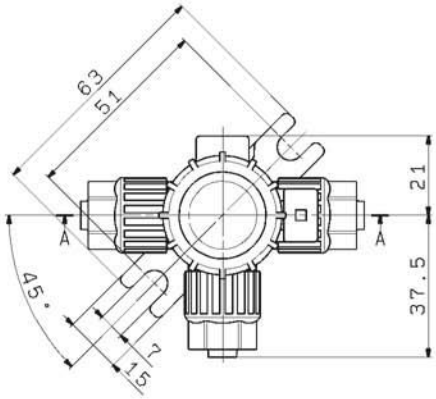

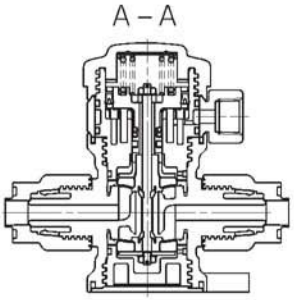

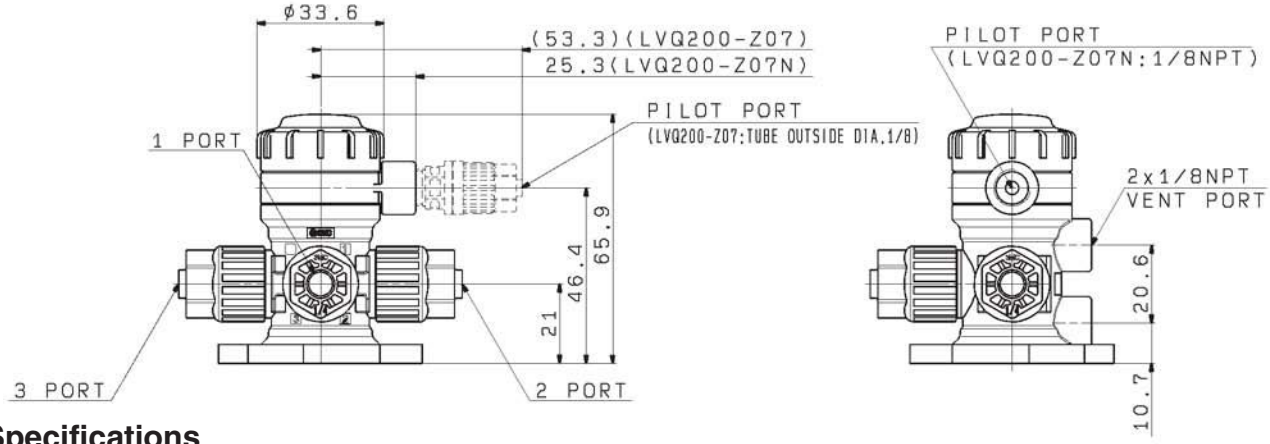

Specifications

LVQ200Z Series

Operating Pressure	**MPa**	**1 port → 2,3 port**	**0 to 0.6**
		2,3 port → 1 port	**0 to 0.2**
Pilot Pressure	**MPa**	**0.45 to 0.6**	
Media		**Pure Water • Chemical Liquid**	
Orifice Size	**mmø**	**6**	
Cv. Factor		**0.35**	
Fluid Temperature	**C°**	**0 to 100**	
Ambient Temperature	**C°**	**0 to 60**	
Material of Main Parts	**Diaphragm**	**PTFE**	
	Body	**PFA**	
Port Size		**Tube Size 1/4" x 5/32"**	

Courtesy of Steven Engineering, Inc - (800) 258-9200 - sales@steveneng.com - www.stevenengineering.com

Diaphragm Type Air Operated 3-Way Valve

Series LVQ400Z

How to Order

LVQ 4 00 – * * * * *

Body Class

Class	Orifice Size
4	ø12

Integral Fitting

Z	LQ3 PFA Compression Nut
Y	LQ3 PVDF Compression Nut

Fitting

Symbol	Tube O.D.	Class
11	3/8” x 1/4”	3
13	1/2” x 3/8”	4

Pilot Port Type

Nil	LQ3 Integral Fitting	Tube Outside Diameter 1/8”
N	Thread Type	NPT 1/8”

Dimensions

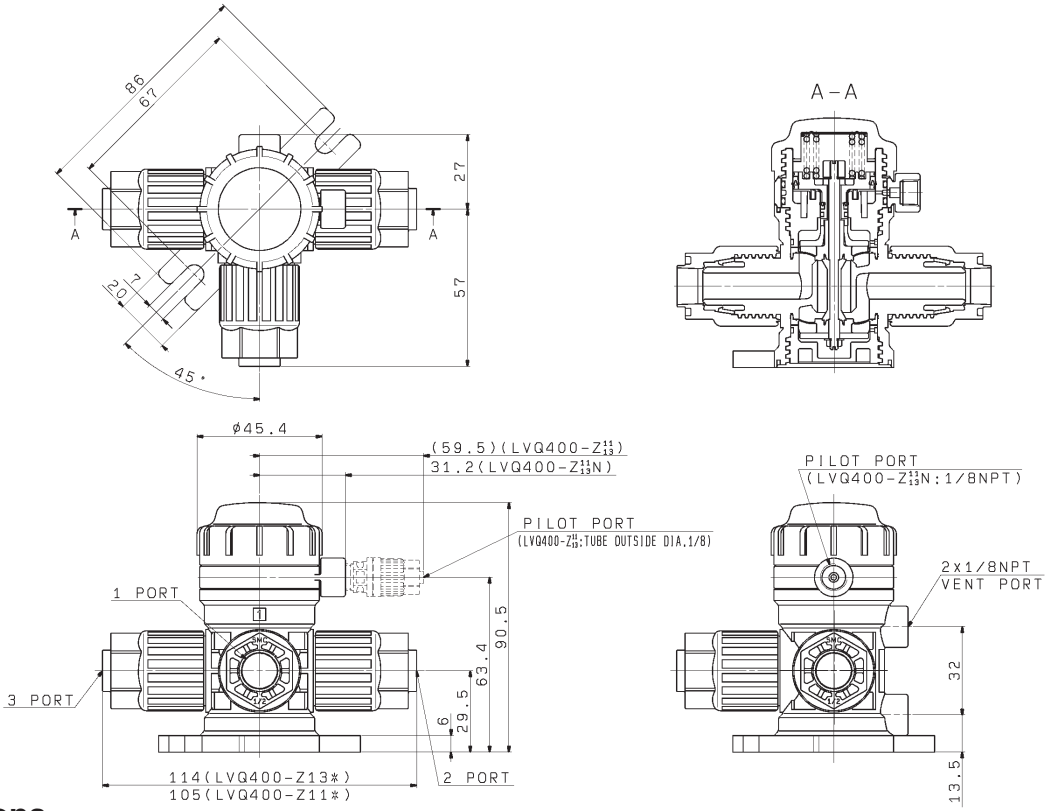

Specifications

LVQ400Z Series

Operating Pressure	**MPa**	**1 port → 2,3 port**	**0 to 0.6**
		2,3 port → 1 port	**0 to 0.2**
Pilot Pressure	**MPa**	**0.45 to 0.6**	
Media		**Pure Water • Chemical Liquid**	
Orifice Size	**mmø**	**12**	
Cv. Factor		**1.3 (LVQ400 - Z11*)**	
		1.9 (LVQ400 - Z13*)	
Fluid Temperature	**C°**	**0 to 100**	
Ambient Temperature	**C°**	**0 to 60**	
Materials of Main Parts	**Diaphragm**	**PTFE**	
	Body	**PFA**	
Port Size		**Tube Size 3/8” x 1/4” (LVQ400 - Z11*)**	
		Tube Size 1/2” x 3/8” (LVQ400 - Z13*)	

Courtesy of Steven Engineering, Inc - (800) 258-9200 - sales@steveneng.com - www.stevenengineering.com

Diaphragm Type Air Operated 3-Way Valve

Series LVQ600Z

How to Order

LVQ 6 00 – * ** *

Body Class

Class	Orifice Size
6	ø22

Integral Fitting

Z	LQ3 PFA Compression Nut
Y	LQ3 PVDF Compression Nut

Fitting

Symbol	Tube O.D.	Class
19	3/4” x 5/8”	5
25	1” x 7/8”	6

Pilot Port Type

Nil	LQ3 Integral Fitting	Tube Outside Diameter 1/8”
N	Thread Type	NPT 1/8”

Dimensions

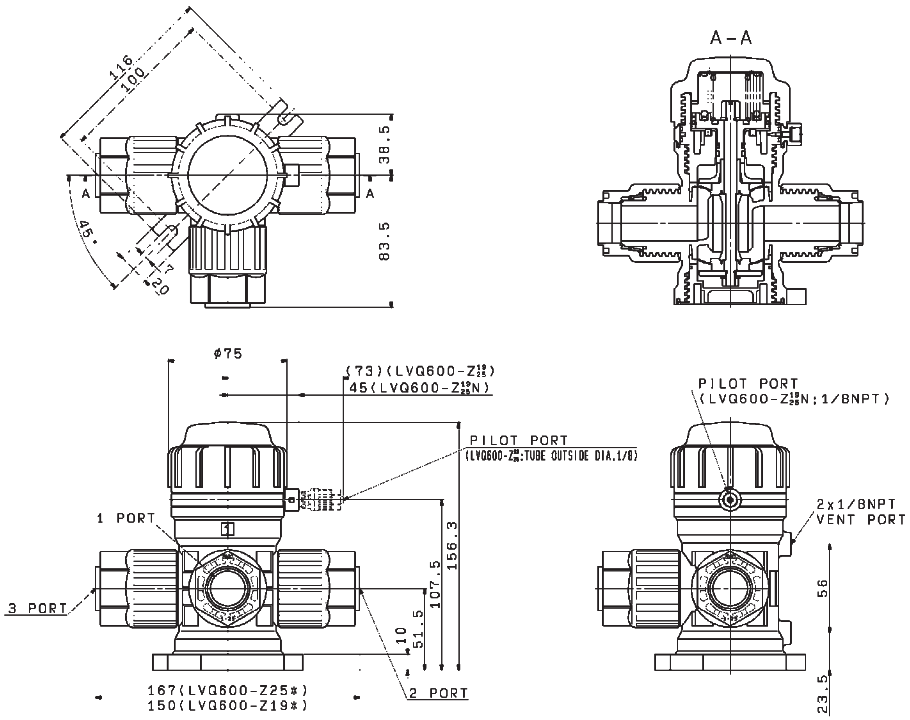

Specifications

LVQ600Z Series

Operating Pressure	**MPa**	**1 port → 2,3 port**	**0 to 0.6**
		2,3 port → 1 port	**0 to 0.2**
Pilot Pressure	**MPa**	**0.45 to 0.6**	
Media		**Pure Water • Chemical Liquid**	
Orifice Size	**mmø**	**22**	
Cv. Factor		**5 (LVQ600 - Z19*)**	
		8 (LVQ600 - Z25*)	
Fluid Temperature	**C°**	**0 to 100**	
Ambient Temperature	**C°**	**0 to 60**	
Materials of Main Parts	**Diaphragm**	**PTFE**	
	Body	**PFA**	
Port Size		**Tube Size 3/4” x 5/8” (LVQ600 - Z19*)**	
		Tube Size 1” x 7/8” (LVQ600 - Z25*)	

Courtesy of Steven Engineering, Inc - (800) 258-9200 - sales@steveneng.com - www.stevenengineering.com