# Zero Differential Pressure Type Pilot Operated 2 Port Solenoid Valve

## *VXZ* Series



CE RoHS

**Compact**
**Height**
**4%Smaller***(4 mm)
**(VXZ24, C37 (Brass) body)**

**Lightweight**
**Weight**
**27%Lighter***(150 g)
**(VXZ23, Resin body)**

* Comparison with SMC current model

- **Can be used at 0 m hydraulic head!**
- **Min. operating pressure differential: 0 MPa**

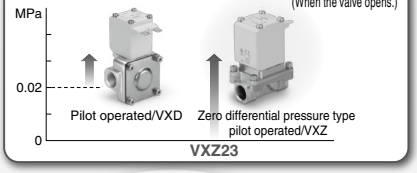


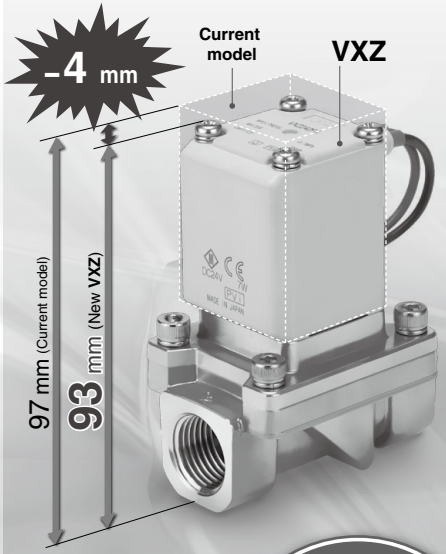

**Enclosure**

**IP65***

* Electrical entry flat terminal type terminal is IP40.

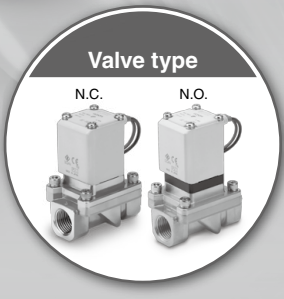




Courtesy of Steven Engineering, Inc - (800) 258-9200 - sales@steveneng.com - www.stevenengineering.com

Air Water Oil Heated water High temperature oil

## Enclosure IP65

## Flame resistance UL94V-0 conformed
Flame resistant mold coil material

## Piping variations
Thread piping, One-touch fitting

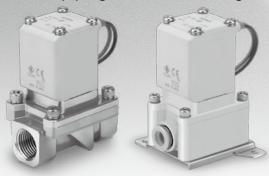

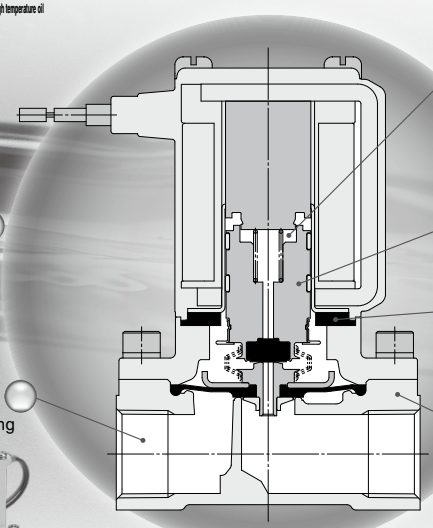

## Clearance
By providing a bumper and clearance, we reduced the collision sound of the core when ON (when the valve is open). Because of the clearance, when using highly viscous fluids such as oil, the armature does not get stuck and the responsiveness when OFF (when the valve is closed) is improved.

## Improved armature durability

## Low-noise construction
Metal noise reduced by the rubber bumper

## Body material
Aluminum, Resin **Air** (VXZ2$^{3}_{A}$)

C37, Stainless steel **Water/ Oil/Air/ Heated water/ High temperature oil**

### Built-in full-wave rectifier type (AC specification)

- **Improved durability**
  Service life is extended by the special construction. (compared with current AC specification)
- **Reduced buzz noise**
  Rectified to DC by the full-wave rectifier, resulting in a buzz noise reduction.
- **Improved OFF response**
  Specially constructed to improve the OFF response when operated with a higher viscosity fluid such as oil.
- **Low-noise construction**
  Specially constructed to reduce the metal noise during operation.

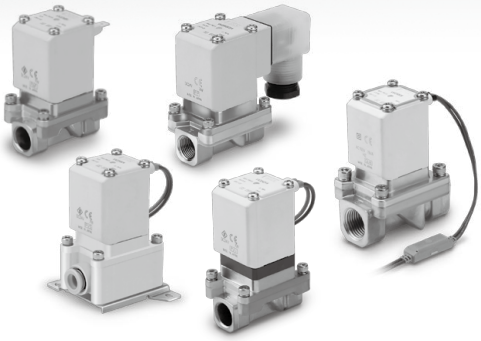

### Variations

**<Fluid>**

| Model | Applicable fluid* Air | Water | Oil | Heated water | High temperature oil |
|---|---|---|---|---|---|
| For Air VXZ2□0 P.176 | ● | | | | |
| For Water VXZ2□2 P.179 | ● | ● | | | |
| For Oil VXZ2□3 P.182 | ● | ● | ● | | |
| For Heated water VXZ2□5 P.185 | ● | ● | | ● | |
| For High temperature oil VXZ2□6 P.188 | ● | ● | ● | | ● |

**<Body Size>**

| Model | Body size | Orifice diameter mmø | Port size | Body material | Fluid |
|---|---|---|---|---|---|
| VXZ2$^{3}_{A}$ | 10A | 10 | 1/4, 3/8 | Aluminum | Air |
| | | | ø10, ø12, ø3/8" | Resin | |
| | | | 1/4, 3/8 | C37 | Air, Water |
| | | | | Stainless steel | |
| VXZ2$^{4}_{B}$ | 15A | 15 | 1/2 | C37 | Oil, Heated water |
| | | | | Stainless steel | |
| VXZ2$^{5}_{C}$ | 20A | 20 | 3/4 | C37 | |
| | | | | Stainless steel | |
| VXZ2$^{6}_{D}$ | 25A | 25 | 1 | C37 | High temperature oil |
| | | | | Stainless steel | |

* For details, refer to pages 209 and 210.



SMC
Courtesy of Steven Engineering, Inc - (800) 258-9200 - sales@steveneng.com - www.stevenengineering.com

# INDEX

## Zero Differential Pressure Type Pilot Operated 2 Port Solenoid Valve
### *VXZ Series*

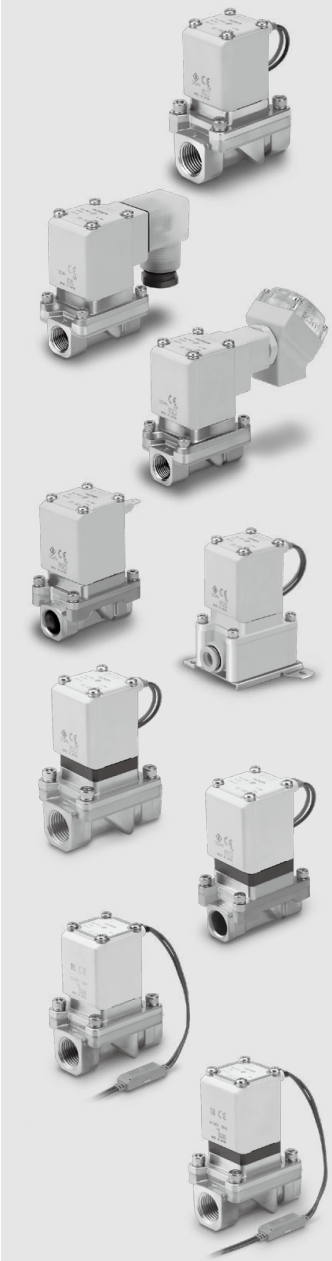


Common Specifications ..... P. 174

Selection Steps ..... P. 175

**For Air**

Flow Rate Characteristics, Fluid and Ambient Temperature, Valve Leakage··· P. 176, 177

How to Order ..... P. 178

**For Water**

Flow Rate Characteristics, Fluid and Ambient Temperature, Valve Leakage··· P. 179, 180

How to Order ..... P. 181

**For Oil**

Flow Rate Characteristics, Fluid and Ambient Temperature, Valve Leakage··· P. 182, 183

How to Order ..... P. 184

**For Heated Water**

Flow Rate Characteristics, Fluid and Ambient Temperature, Valve Leakage····P. 185, 186

How to Order ..... P. 187

**For High Temperature Oil**

Flow Rate Characteristics, Fluid and Ambient Temperature, Valve Leakage····P. 188, 189

How to Order ..... P. 190

Other Special Options ..... P. 192

Construction ..... P. 194

Dimensions

For Air, Water, Oil

Body material: Resin ..... P. 196

Body material: Aluminum, C37, Stainless steel ..... P. 198

For Heated Water, High Temperature Oil

Body material: C37, Stainless steel ..... P. 200

Replacement Parts ..... P. 201

Glossary of Terms ..... P. 202

Solenoid Valve Flow Rate Characteristics ..... P. 203

Flow Rate Characteristics ..... P. 208

Specific Product Precautions ..... P. 209







Courtesy of Steven Engineering, Inc - (800) 258-9200 - sales@steveneng.com - www.stevenengineering.com

# Common Specifications

## Standard Specifications

| | | | |
|---|---|---|---|
| Valve specifications | **Valve construction** | | Zero differential pressure type pilot operated 2 port diaphragm type |
| | **Withstand pressure** | | 2.0 MPa (Resin body type 1.5 MPa) |
| | **Body material** | | Aluminum, Resin, C37 (Brass), Stainless steel Note 1) |
| | **Seal material** | | NBR, FKM, EPDM |
| | **Enclosure** | | Dust-tight, Water-jet-proof type (equivalent to IP65) Note 2) 4) |
| | **Environment** | | Location without corrosive or explosive gases |
| Coil specifications | **Rated voltage** | **AC** | 100 VAC, 200 VAC, 110 VAC, 230 VAC, (220 VAC, 240 VAC, 48 VAC, 24 VAC) Note 3) |
| | | **DC** | 24 VDC, (12 VDC) Note 3) |
| | **Allowable voltage fluctuation** | | ±10% of rated voltage |
| | **Allowable leakage voltage** | **AC (Built-in full-wave rectifier type)** | 5% or less of rated voltage |
| | | **DC** | 2% or less of rated voltage |
| | **Coil insulation type** | | Class B (for air, water, oil), Class H (for heated water, high temperature oil) |

Note 1) Body material is aluminum. Resin body is available only for the VXZ2$^{3}_{A}$.
Note 2) Electrical entry flat terminal type terminal is IP40.
Note 3) Voltage in ( ) indicates special voltage. (Refer to page 192.)
Note 4) For enclosure, refer to "Glossary of Terms" on page 202. When using the product in a place which requires water resistance, please contact SMC.

⚠ **Be sure to read "Specific Product Precautions" before handling.**

⚠ **When pressure differential is less than 0.01 MPa, operation may become unstable. Please contact SMC in case of low flow operation. (Refer to page 195.)**

## Solenoid Coil Specifications

### Normally Closed (N.C.)

#### DC Specification

**Class B**

| Model | Power consumption (W) Note 1) | Temperature rise (°C) Note 2) |
|---|---|---|
| **VXZ23, 24** | 7 | 55 |
| **VXZ25, 26** | 10.5 | 65 |

**Class H**

| Model | Power consumption (W) Note 1) | Temperature rise (°C) Note 2) |
|---|---|---|
| **VXZ23, 24** | 12 | 100 |
| **VXZ25, 26** | 15 | 100 |

### Normally Open (N.O.)

#### DC Specification

**Class B**

| Model | Power consumption (W) Note 1) | Temperature rise (°C) Note 2) |
|---|---|---|
| **VXZ2A, 2B** | 8.5 | 70 |
| **VXZ2C, 2D** | 12.5 | 70 |

**Class H**

| Model | Power consumption (W) Note 1) | Temperature rise (°C) Note 2) |
|---|---|---|
| **VXZ2A, 2B** | 12 | 100 |
| **VXZ2C, 2D** | 15 | 100 |

Note 1) Power consumption, Apparent power: The value at ambient temperature of 20°C and when the rated voltage is applied. (Variation: ±10%)
Note 2) The value at ambient temperature of 20°C and when the rated voltage is applied. The value depends on the ambient environment. This is for reference.

### Normally Closed (N.C.)

#### AC Specification (Built-in Full-wave Rectifier Type)

**Class B**

| Model | Apparent power (VA) Note 1) 2) | Temperature rise (°C) Note 3) |
|---|---|---|
| **VXZ23, 24** | 9.5 | 70 |
| **VXZ25, 26** | 12 | 70 |

**Class H**

| Model | Apparent power (VA) Note 1) 2) | Temperature rise (°C) Note 3) |
|---|---|---|
| **VXZ23, 24** | 12 | 100 |
| **VXZ25, 26** | 15 | 100 |

### Normally Open (N.O.)

#### AC Specification (Built-in Full-wave Rectifier Type)

**Class B**

| Model | Apparent power (VA) Note 1) 2) | Temperature rise (°C) Note 3) |
|---|---|---|
| **VXZ2A, 2B** | 10 | 70 |
| **VXZ2C, 2D** | 14 | 70 |

**Class H**

| Model | Apparent power (VA) Note 1) 2) | Temperature rise (°C) Note 3) |
|---|---|---|
| **VXZ2A, 2B** | 12 | 100 |
| **VXZ2C, 2D** | 15 | 100 |

Note 1) Power consumption, Apparent power: The value at ambient temperature of 20°C and when the rated voltage is applied. (Variation: ±10%)
Note 2) There is no difference in the frequency and the inrush and energized apparent power, since a rectifying circuit is used in the AC (Built-in full-wave rectifier type).
Note 3) The value at ambient temperature of 20°C and when the rated voltage is applied. The value depends on the ambient environment. This is for reference.



SMC
Courtesy of Steven Engineering, Inc - (800) 258-9200 - sales@steveneng.com - www.stevenengineering.com

# Selection Steps

## Selection Steps

**Step 1** **Select the fluid.**

| Item | Selection item | Page | Symbol |
|---|---|---|---|
| Select the fluid. | Air | Page 176 | 0 |
| | Water | Page 179 | 2 |
| | Oil | Page 182 | 3 ❶ |
| | Heated water | Page 185 | 5 |
| | High temperature oil | Page 188 | 6 |

**VXZ2 3 0 A A**
❶

**Step 2** **Select "Body material", "Port size" and "Orifice diameter" from "Flow rate — Pressure" of each fluid.**

| Item | Selection item | | Symbol |
|---|---|---|---|
| Select from "Flow rate — Pressure."<br>• Body material<br>• Port size<br>• Orifice diameter | Body size, Valve | 10A, N.C. | 3 ❷ |
| | Body material | Aluminum | |
| | Port size | 1/8 | A ❸ |
| | Orifice diameter | 10 | |

**VXZ2 3 0 A A**
❷ ❸

**Step 3** **Select electrical specification.**

| Item | Selection item | | Symbol |
|---|---|---|---|
| Select electrical specification. | Voltage | 24 VDC | A ❹ |
| | Electrical entry | Grommet | |

**VXZ2 3 0 A A**
❹

**Step 4** **For other special options, refer to pages 192 and 193.**





Courtesy of Steven Engineering, Inc - (800) 258-9200 - sales@steveneng.com - www.stevenengineering.com

# For Air

∗ Can be used with low vacuum (up to 133 Pa.abs).

## Flow Rate Characteristics

**N.C.**

**Symbol**

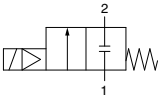


When the valve is closed, flow is blocked from port 1 to port 2. However, if the pressure in port 2 is higher than port 1, the valve will not be able to block the fluid and it will flow from port 2 to port 1.

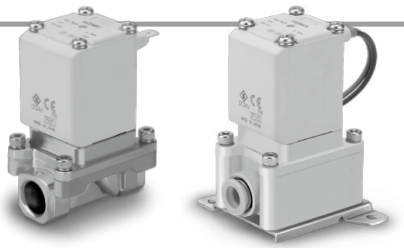

### Normally Closed (N.C.)

| Body material | Port size (Nominal diameter) | Orifice diameter (mmø) | Model | Min. operating pressure differential Note 1) (MPa) | Max. operating pressure differential Note 3) (MPa) | | Flow rate characteristics | | | | Max. system pressure Note 3) (MPa) | Note 2) Weight (g) |
|---|---|---|---|---|---|---|---|---|---|---|---|---|
| | | | | | AC | DC | C [dm³/(s·bar)] | b | Cv | Effective area (mm²) | | |
| Resin | ø10 | 10 | **VXZ230** | 0 | 1.0 | 0.7 | 6.2 | 0.38 | 1.7 | — | 1.5 | 400 |
| | ø3/8" | | | | | | 5.3 | | 1.2 | | | |
| | ø12 | | | | | | 8.0 | | 2.0 | | | |
| Aluminum | 1/4 (8A) | | | | | | 8.5 | 0.44 | 2.4 | | | 600 |
| | 3/8 (10A) | | | | | | 9.3 | 0.43 | 2.6 | | | |
| C37, Stainless steel | 1/2 (15A) | 15 | **VXZ240** | | | | 23.0 | 0.34 | 6.0 | | | 720 |
| | 3/4 (20A) | 20 | **VXZ250** | | | 1.0 | 36.0 | 0.26 | 9.4 | | | 1100 |
| | 1 (25A) | 25 | **VXZ260** | | | | — | | | 185 | | 1300 |

Note 1) The operation of the valve may be unstable due to the capacity of the pressure supply source such as pumps and compressors or the pressure loss by the orifice of piping. Please contact SMC to check if the required valve size can be used in the application. Please contact SMC for the compatibility of the circuit flow and valve size. (Refer to page 195.)
Note 2) Weight of grommet type. Add 10 g for conduit, 30 g for DIN terminal, and 60 g for conduit terminal type respectively.
Note 3) Refer to "Glossary of Terms" on page 202 for details on the maximum operating pressure differential and the maximum system pressure.

## Fluid and Ambient Temperature

| Fluid temperature (°C) | Ambient temperature (°C) |
|---|---|
| −10 Note) to 60 | −20 to 60 |

Note) Dew point temperature: −10°C or less

## Valve Leakage Rate

### Internal Leakage

| Seal material | Leakage rate (Air) Note 1) 2) |
|---|---|
| NBR (FKM) Note 3) | 15 cm³/min or less (Aluminum body type) |
| | 15 cm³/min or less (Resin body type) |
| | 1 cm³/min or less (Metal body type) |

### External Leakage

| Seal material | Leakage rate (Air) Note 1) |
|---|---|
| NBR (FKM) Note 3) | 15 cm³/min or less (Aluminum body type) |
| | 15 cm³/min or less (Resin body type) |
| | 1 cm³/min or less (Metal body type) |

Note 1) Leakage is the value at ambient temperature 20°C.
Note 2) Leakage is the value when the pressure differential ranges from 0.01 MPa to the maximum operating pressure differential.
Note 3) For seal material/FKM, refer to "Other options" on page 192 for the selection.
Note 4) When the product is used with low vacuum (to 133 Pa.abs), give caution to the external leakage outlined above.



SMC
Courtesy of Steven Engineering, Inc - (800) 258-9200 - sales@steveneng.com - www.stevenengineering.com

## Flow Rate Characteristics

**N.O.**

**Symbol**

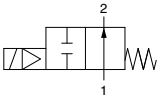


When the valve is closed, flow is blocked from port 1 to port 2. However, if the pressure in port 2 is higher than port 1, the valve will not be able to block the fluid and it will flow from port 2 to port 1.

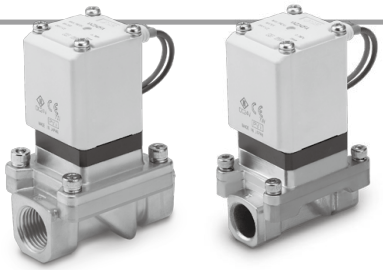

### Normally Open (N.O.)

| Body material | Port size (Nominal diameter) | Orifice diameter (mmø) | Model | Min. operating pressure differential Note 1) (MPa) | Max. operating pressure differential Note 3) (MPa) | | Flow rate characteristics | | | | Max. system pressure Note 3) (MPa) | Note 2) Weight (g) |
|---|---|---|---|---|---|---|---|---|---|---|---|---|
| | | | | | AC | DC | C [dm³/(s·bar)] | b | Cv | Effective area (mm²) | | |
| Resin | ø10 | 10 | **VXZ2A0** | 0 | 0.7 | 0.6 | 6.2 | 0.38 | 1.7 | — | 1.5 | 430 |
| | ø3/8" | | | | | | 5.3 | | 1.2 | | | |
| | ø12 | | | | | | 8.0 | | 2.0 | | | |
| Aluminum | 1/4 (8A) | | | | | | 8.5 | 0.44 | 2.4 | | | 630 |
| | 3/8 (10A) | | | | | | 9.3 | 0.43 | 2.6 | | | |
| C37, Stainless steel | 1/2 (15A) | 15 | **VXZ2B0** | | | | 23.0 | 0.34 | 6.0 | | | 750 |
| | 3/4 (20A) | 20 | **VXZ2C0** | | | | 36.0 | 0.26 | 9.4 | | | 1150 |
| | 1 (25A) | 25 | **VXZ2D0** | | | | — | | | 185 | | 1350 |

Note 1) The operation of the valve may be unstable due to the capacity of the pressure supply source such as pumps and compressors or the pressure loss by the orifice of piping. Please contact SMC to check if the required valve size can be used in the application. Please contact SMC for the compatibility of the circuit flow and valve size. (Refer to page 195.)
Note 2) Weight of grommet type. Add 10 g for conduit, 30 g for DIN terminal, and 60 g for conduit terminal type respectively.
Note 3) Refer to "Glossary of Terms" on page 202 for details on the maximum operating pressure differential and the maximum system pressure.

## Fluid and Ambient Temperature

| Fluid temperature (°C) | Ambient temperature (°C) |
|---|---|
| –10 Note) to 60 | –20 to 60 |

Note) Dew point temperature: –10°C or less

## Valve Leakage Rate

### Internal Leakage

| Seal material | Leakage rate (Air) Note 1) 2) |
|---|---|
| NBR (FKM) Note 3) | 15 cm³/min or less (Aluminum body type) |
| | 15 cm³/min or less (Resin body type) |
| | 1 cm³/min or less (Metal body type) |

### External Leakage

| Seal material | Leakage rate (Air) Note 1) |
|---|---|
| NBR (FKM) Note 3) | 15 cm³/min or less (Aluminum body type) |
| | 15 cm³/min or less (Resin body type) |
| | 1 cm³/min or less (Metal body type) |

Note 1) Leakage is the value at ambient temperature 20°C.
Note 2) Leakage is the value when the pressure differential ranges from 0.01 MPa to the maximum operating pressure differential.
Note 3) For seal material/FKM, refer to "Other options" on page 192 for the selection.



Courtesy of Steven Engineering, Inc - (800) 258-9200 - sales@steveneng.com - www.stevenengineering.com

## How to Order (Single Unit)

**VXZ2 [3] [0] [A] [A]**

**Fluid**

| | |
|---|---|
| 0 | For Air |

**Common Specifications**

| | |
|---|---|
| Seal material | NBR |
| Coil insulation type | Class B |
| Thread type | Rc* |

* One-touch fittings are attached to the resin body type.

**Size/Valve type**

| Symbol | Body size | Valve type |
|---|---|---|
| 3 | 10A | N.C. |
| A | | N.O. |
| 4 | 15A | N.C. |
| B | | N.O. |
| 5 | 20A | N.C. |
| C | | N.O. |
| 6 | 25A | N.C. |
| D | | N.O. |

**Body material/Port size/Orifice diameter**

| Symbol | Body material | Port size | Orifice diameter |
|---|---|---|---|
| A | Aluminum | 1/4 | 10 |
| B | | 3/8 | |
| C | Resin (With bracket) | ø10 One-touch fitting | |
| D | | ø3/8" One-touch fitting | |
| E | | ø12 One-touch fitting | |
| F | C37 | 1/2 | 15 |
| G | Stainless steel | | |
| H | C37 | 3/4 | 20 |
| J | Stainless steel | | |
| K | C37 | 1 | 25 |
| L | Stainless steel | | |

**Voltage/Electrical entry**

| Symbol | Voltage | Electrical entry |
|---|---|---|
| A | 24 VDC | Grommet |
| B | 100 VAC | Grommet (With surge voltage suppressor) |
| C | 110 VAC | |
| D | 200 VAC | |
| E | 230 VAC | |
| F | 24 VDC | |
| G | 24 VDC | DIN terminal (With surge voltage suppressor) |
| H | 100 VAC | |
| J | 110 VAC | |
| K | 200 VAC | |
| L | 230 VAC | |
| M | 24 VDC | Conduit terminal (With surge voltage suppressor) |
| N | 100 VAC | |
| P | 110 VAC | |
| Q | 200 VAC | |
| R | 230 VAC | |
| S | 24 VDC | Conduit (With surge voltage suppressor) |
| T | 100 VAC | |
| U | 110 VAC | |
| V | 200 VAC | |
| W | 230 VAC | |
| Y | 24 VDC | Flat terminal |
| Z | Other voltages | |

**For other special options, refer to pages 192 and 193.**

| | |
|---|---|
| Special voltage | 24 VAC |
| | 48 VAC |
| | 220 VAC |
| | 240 VAC |
| | 12 VDC |
| DIN terminal with light | |
| Conduit terminal with light | |
| Without DIN connector | |
| Low concentration ozone resistant (Seal material: FKM) | |
| Seal material: EPDM | |
| Oil-free | |
| G thread | |
| NPT thread | |
| With bracket (Standard for resin body) | |
| Special electrical entry direction | |

Dimensions → Page 196 and after



SMC
Courtesy of Steven Engineering, Inc - (800) 258-9200 - sales@steveneng.com - www.stevenengineering.com

# For Water

∗ Can be used with air (Up to 133 Pa.abs for vacuum).
Note that the maximum operating pressure differential and flow rate characteristics should be within the specifications for air.

## Flow Rate Characteristics

**N.C.**

**Symbol**

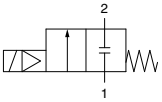


When the valve is closed, flow is blocked from port 1 to port 2. However, if the pressure in port 2 is higher than port 1, the valve will not be able to block the fluid and it will flow from port 2 to port 1.

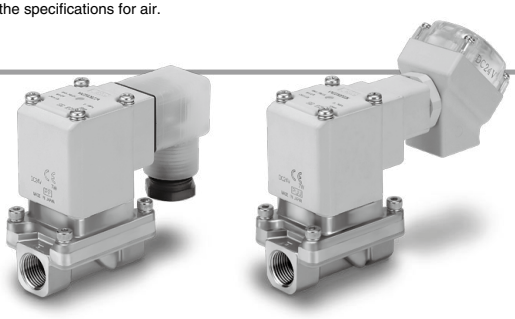

### Normally Closed (N.C.)

| Body material | Port size (Nominal diameter) | Orifice diameter (mmø) | Model | Min. operating pressure differential Note 1) (MPa) | Max. operating pressure differential (MPa) Note 3) | | Flow rate characteristics | | Max. system pressure Note 3) (MPa) | Weight Note 2) (g) |
|---|---|---|---|---|---|---|---|---|---|---|
| | | | | | AC | DC | Kv | Cv | | |
| C37, Stainless steel | 1/4 (8A) | 10 | **VXZ232** | 0 | 1.0 | 0.7 | 1.6 | 1.9 | 1.5 | 600 |
| | 3/8 (10A) | | | | | | 2.0 | 2.4 | | |
| | 1/2 (15A) | 15 | **VXZ242** | | | | 4.6 | 5.3 | | 720 |
| | 3/4 (20A) | 20 | **VXZ252** | | | 1.0 | 7.8 | 9.2 | | 1100 |
| | 1 (25A) | 25 | **VXZ262** | | | | 8.7 | 10.2 | | 1300 |

Note 1) The operation of the valve may be unstable due to the capacity of the pressure supply source such as pumps and compressors or the pressure loss by the orifice of piping. Please contact SMC to check if the required valve size can be used in the application. Please contact SMC for the compatibility of the circuit flow and valve size. (Refer to page 195.)
Note 2) Weight of grommet type. Add 10 g for conduit, 30 g for DIN terminal, and 60 g for conduit terminal type respectively.
Note 3) Refer to "Glossary of Terms" on page 202 for details on the maximum operating pressure differential and the maximum system pressure.

## Fluid and Ambient Temperature

| Fluid temperature (°C) | Ambient temperature (°C) |
|---|---|
| 1 to 60 | –20 to 60 |

Note) With no freezing

## Valve Leakage Rate

### Internal Leakage

| Seal material | Leakage rate (Water) Note 1) 2) |
|---|---|
| NBR (FKM) Note 3) | 0.1 cm$^3$/min or less |

### External Leakage

| Seal material | Leakage rate (Water) Note 1) |
|---|---|
| NBR (FKM) Note 3) | 0.1 cm$^3$/min or less |

Note 1) Leakage is the value at ambient temperature 20°C.
Note 2) Leakage is the value when the pressure differential ranges from 0.01 MPa to the maximum operating pressure differential.
Note 3) For seal material/FKM, refer to "Other options" on page 192 for the selection.





Courtesy of Steven Engineering, Inc - (800) 258-9200 - sales@steveneng.com - www.stevenengineering.com

## Flow Rate Characteristics

**N.O.**

**Symbol**

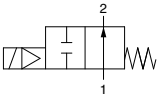


When the valve is closed, flow is blocked from port 1 to port 2. However, if the pressure in port 2 is higher than port 1, the valve will not be able to block the fluid and it will flow from port 2 to port 1.

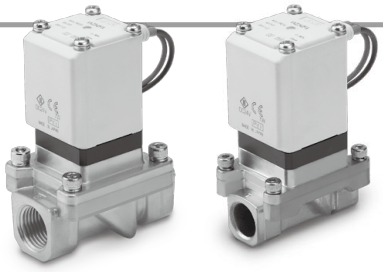

### Normally Open (N.O.)

| Body material | Port size (Nominal diameter) | Orifice diameter (mmø) | Model | Min. operating pressure differential Note 1) (MPa) | Max. operating pressure differential Note 3) (MPa) | | Flow rate characteristics | | Max. system pressure Note 3) (MPa) | Weight Note 2) (g) |
|---|---|---|---|---|---|---|---|---|---|---|
| | | | | | AC | DC | Kv | Cv | | |
| C37, Stainless steel | 1/4 (8A) | 10 | **VXZ2A2** | 0 | 0.7 | 0.6 | 1.6 | 1.9 | 1.5 | 630 |
| | 3/8 (10A) | | | | | | 2.0 | 2.4 | | |
| | 1/2 (15A) | 15 | **VXZ2B2** | | | | 4.6 | 5.3 | | 750 |
| | 3/4 (20A) | 20 | **VXZ2C2** | | | | 7.8 | 9.2 | | 1150 |
| | 1 (25A) | 25 | **VXZ2D2** | | | | 8.7 | 10.2 | | 1350 |

Note 1) The operation of the valve may be unstable due to the capacity of the pressure supply source such as pumps and compressors or the pressure loss by the orifice of piping. Please contact SMC to check if the required valve size can be used in the application. Please contact SMC for the compatibility of the circuit flow and valve size. (Refer to page 195.)
Note 2) Weight of grommet type. Add 10 g for conduit, 30 g for DIN terminal, and 60 g for conduit terminal type respectively.
Note 3) Refer to "Glossary of Terms" on page 202 for details on the maximum operating pressure differential and the maximum system pressure.

## Fluid and Ambient Temperature

| Fluid temperature (°C) | Ambient temperature (°C) |
|---|---|
| 1 to 60 | –20 to 60 |

Note) With no freezing

## Valve Leakage Rate

### Internal Leakage

| Seal material | Leakage rate (Water) Note 1) 2) |
|---|---|
| NBR (FKM) Note 3) | 0.1 cm$^3$/min or less |

### External Leakage

| Seal material | Leakage rate (Water) Note 1) |
|---|---|
| NBR (FKM) Note 3) | 0.1 cm$^3$/min or less |

Note 1) Leakage is the value at ambient temperature 20°C.
Note 2) Leakage is the value when the pressure differential ranges from 0.01 MPa to the maximum operating pressure differential.
Note 3) For seal material/FKM, refer to "Other options" on page 192 for the selection.


Courtesy of Steven Engineering, Inc - (800) 258-9200 - sales@steveneng.com - www.stevenengineering.com

## How to Order (Single Unit)

**VXZ2 3 2 A A**

**Fluid**

| | |
|---|---|
| 2 | For Water |

**Common Specifications**

| | |
|---|---|
| Seal material | NBR |
| Coil insulation type | Class B |
| Thread type | Rc |



**Size/Valve type**

| Symbol | Body size | Valve type |
|---|---|---|
| 3 | 10A | N.C. |
| A | | N.O. |
| 4 | 15A | N.C. |
| B | | N.O. |
| 5 | 20A | N.C. |
| C | | N.O. |
| 6 | 25A | N.C. |
| D | | N.O. |

**Body material/Port size/Orifice diameter**

| Symbol | Body material | Port size | Orifice diameter |
|---|---|---|---|
| A | C37 | 1/4 | 10 |
| B | | 3/8 | |
| C | Stainless steel | 1/4 | |
| D | | 3/8 | |
| F | C37 | 1/2 | 15 |
| G | Stainless steel | | |
| H | C37 | 3/4 | 20 |
| J | Stainless steel | | |
| K | C37 | 1 | 25 |
| L | Stainless steel | | |

**Voltage/Electrical entry**

| Symbol | Voltage | Electrical entry |
|---|---|---|
| A | 24 VDC | Grommet 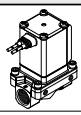 |
| B | 100 VAC | Grommet (With surge voltage suppressor) |
| C | 110 VAC | |
| D | 200 VAC | |
| E | 230 VAC | |
| F | 24 VDC | |
| G | 24 VDC | DIN terminal (With surge voltage suppressor) 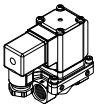 |
| H | 100 VAC | |
| J | 110 VAC | |
| K | 200 VAC | |
| L | 230 VAC | |
| M | 24 VDC | Conduit terminal (With surge voltage suppressor) 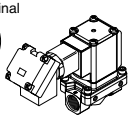 |
| N | 100 VAC | |
| P | 110 VAC | |
| Q | 200 VAC | |
| R | 230 VAC | |
| S | 24 VDC | Conduit (With surge voltage suppressor) 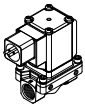 |
| T | 100 VAC | |
| U | 110 VAC | |
| V | 200 VAC | |
| W | 230 VAC | |
| Y | 24 VDC | Flat terminal 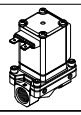 |
| Z | Other voltages | |

**For other special options, refer to pages 192 and 193.**

| | |
|---|---|
| Special voltage | 24 VAC |
| | 48 VAC |
| | 220 VAC |
| | 240 VAC |
| | 12 VDC |
| DIN terminal with light | |
| Conduit terminal with light | |
| Without DIN connector | |
| Applicable to deionized water (Seal material: FKM) | |
| Seal material: EPDM | |
| Oil-free | |
| G thread | |
| NPT thread | |
| With bracket | |
| Special electrical entry direction | |

Dimensions → Page 198 and after



Courtesy of Steven Engineering, Inc - (800) 258-9200 - sales@steveneng.com - www.stevenengineering.com

# For Oil

* Can be used with air and water.
  Note that the maximum operating pressure differential and flow rate characteristics should be within the specifications of the fluid used.

**⚠When the fluid is oil.**

**The kinematic viscosity must not exceed 50 mm²/s. The special construction of the armature adopted in the built-in full-wave rectifier type gives an improvement in OFF response by providing clearance on the absorbed surface when it is switched ON.**

## Flow Rate Characteristics

**N.C.**

**Symbol**

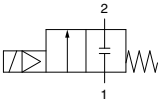


When the valve is closed, flow is blocked from port 1 to port 2. However, if the pressure in port 2 is higher than port 1, the valve will not be able to block the fluid and it will flow from port 2 to port 1.

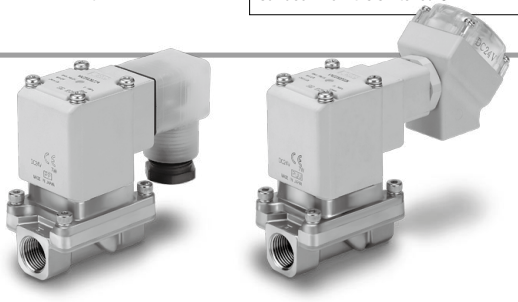

### Normally Closed (N.C.)

| Body material | Port size (Nominal diameter) | Orifice diameter (mmø) | Model | Min. operating pressure differential Note 1) (MPa) | Max. operating pressure differential Note 3) (MPa) | | Flow rate characteristics | | Max. system pressure Note 3) (MPa) | Weight Note 2) (g) |
|---|---|---|---|---|---|---|---|---|---|---|
| | | | | | AC | DC | Kv | Cv | | |
| C37, Stainless steel | 1/4 (8A) | 10 | **VXZ233** | 0 | 0.7 | | 1.6 | 1.9 | 1.5 | 600 |
| | 3/8 (10A) | | | | | | 2.0 | 2.4 | | |
| | 1/2 (15A) | 15 | **VXZ243** | | | | 4.6 | 5.3 | | 720 |
| | 3/4 (20A) | 20 | **VXZ253** | | | | 7.8 | 9.2 | | 1100 |
| | 1 (25A) | 25 | **VXZ263** | | | | 8.7 | 10.2 | | 1300 |

Note 1) The operation of the valve may be unstable due to the capacity of the pressure supply source such as pumps and compressors or the pressure loss by the orifice of piping. Please contact SMC to check if the required valve size can be used in the application. Please contact SMC for the compatibility of the circuit flow and valve size. (Refer to page 195.)
Note 2) Weight of grommet type. Add 10 g for conduit, 30 g for DIN terminal, and 60 g for conduit terminal type respectively.
Note 3) Refer to “Glossary of Terms” on page 202 for details on the maximum operating pressure differential and the maximum system pressure.

## Fluid and Ambient Temperature

| Fluid temperature (°C) | Ambient temperature (°C) |
|---|---|
| –5 Note) to 60 | –20 to 60 |

Note) Kinematic viscosity: 50 mm²/s or less

## Valve Leakage Rate

### Internal Leakage

| Seal material | Leakage rate (Oil) Note 1) 2) |
|---|---|
| FKM | 0.1 cm³/min or less |

### External Leakage

| Seal material | Leakage rate (Oil) Note 1) |
|---|---|
| FKM | 0.1 cm³/min or less |

Note 1) Leakage is the value at ambient temperature 20°C.
Note 2) Leakage is the value when the pressure differential ranges from 0.01 MPa to the maximum operating pressure differential.



SMC
Courtesy of Steven Engineering, Inc - (800) 258-9200 - sales@steveneng.com - www.stevenengineering.com

## Flow Rate Characteristics

**N.O.**

**Symbol**

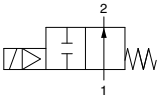


When the valve is closed, flow is blocked from port 1 to port 2. However, if the pressure in port 2 is higher than port 1, the valve will not be able to block the fluid and it will flow from port 2 to port 1.

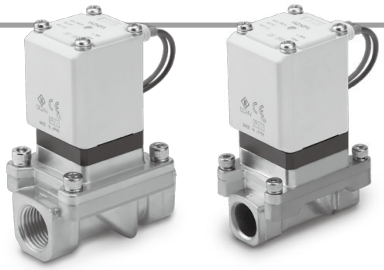

### Normally Open (N.O.)

| Body material | Port size (Nominal diameter) | Orifice diameter (mmø) | Model | Min. operating pressure differential Note 1) (MPa) | Max. operating pressure differential Note 3) (MPa) | | Flow rate characteristics | | Max. system pressure Note 3) (MPa) | Weight Note 2) (g) |
|---|---|---|---|---|---|---|---|---|---|---|
| | | | | | AC | DC | Kv | Cv | | |
| C37, Stainless steel | 1/4 (8A) | 10 | **VXZ2A3** | 0 | 0.7 | 0.6 | 1.6 | 1.9 | 1.5 | 630 |
| | 3/8 (10A) | | | | | | 2.0 | 2.4 | | |
| | 1/2 (15A) | 15 | **VXZ2B3** | | | | 4.6 | 5.3 | | 750 |
| | 3/4 (20A) | 20 | **VXZ2C3** | | | | 7.8 | 9.2 | | 1150 |
| | 1 (25A) | 25 | **VXZ2D3** | | | | 8.7 | 10.2 | | 1350 |

Note 1) The operation of the valve may be unstable due to the capacity of the pressure supply source such as pumps and compressors or the pressure loss by the orifice of piping. Please contact SMC to check if the required valve size can be used in the application. Please contact SMC for the compatibility of the circuit flow and valve size. (Refer to page 195.)
Note 2) Weight of grommet type. Add 10 g for conduit, 30 g for DIN terminal, and 60 g for conduit terminal type respectively.
Note 3) Refer to "Glossary of Terms" on page 202 for details on the maximum operating pressure differential and the maximum system pressure.

## Fluid and Ambient Temperature

| Fluid temperature (°C) | Ambient temperature (°C) |
|---|---|
| –5 Note) to 60 | –20 to 60 |

Note) Kinematic viscosity: 50 $mm^2/s$ or less

## Valve Leakage Rate

### Internal Leakage

| Seal material | Leakage rate (Oil) Note 1) 2) |
|---|---|
| FKM | 0.1 $cm^3$/min or less |

### External Leakage

| Seal material | Leakage rate (Oil) Note 1) |
|---|---|
| FKM | 0.1 $cm^3$/min or less |

Note 1) Leakage is the value at ambient temperature 20°C.
Note 2) Leakage is the value when the pressure differential ranges from 0.01 MPa to the maximum operating pressure differential.



Courtesy of Steven Engineering, Inc - (800) 258-9200 - sales@steveneng.com - www.stevenengineering.com

## How to Order (Single Unit)

**VXZ2 [3] [3] [A] [A]**

**Fluid**

| | |
|---|---|
| 3 | For Oil |

**Common Specifications**

| | |
|---|---|
| Seal material | FKM |
| Coil insulation type | Class B |
| Thread type | Rc |

**Size/Valve type**

| Symbol | Body size | Valve type |
|---|---|---|
| 3 | 10A | N.C. |
| A | | N.O. |
| 4 | 15A | N.C. |
| B | | N.O. |
| 5 | 20A | N.C. |
| C | | N.O. |
| 6 | 25A | N.C. |
| D | | N.O. |

**Body material/Port size/Orifice diameter**

| Symbol | Body material | Port size | Orifice diameter |
|---|---|---|---|
| A | C37 | 1/4 | 10 |
| B | | 3/8 | |
| C | Stainless steel | 1/4 | |
| D | | 3/8 | |
| F | C37 | 1/2 | 15 |
| G | Stainless steel | | |
| H | C37 | 3/4 | 20 |
| J | Stainless steel | | |
| K | C37 | 1 | 25 |
| L | Stainless steel | | |

**Voltage/Electrical entry**

| Symbol | Voltage | Electrical entry |
|---|---|---|
| A | 24 VDC | Grommet |
| B | 100 VAC | Grommet (With surge voltage suppressor) |
| C | 110 VAC | |
| D | 200 VAC | |
| E | 230 VAC | |
| F | 24 VDC | |
| G | 24 VDC | DIN terminal (With surge voltage suppressor) |
| H | 100 VAC | |
| J | 110 VAC | |
| K | 200 VAC | |
| L | 230 VAC | |
| M | 24 VDC | Conduit terminal (With surge voltage suppressor) |
| N | 100 VAC | |
| P | 110 VAC | |
| Q | 200 VAC | |
| R | 230 VAC | |
| S | 24 VDC | Conduit (With surge voltage suppressor) |
| T | 100 VAC | |
| U | 110 VAC | |
| V | 200 VAC | |
| W | 230 VAC | |
| Y | 24 VDC | Flat terminal |
| Z | Other voltages | |

**For other special options, refer to pages 192 and 193.**

| | |
|---|---|
| Special voltage | 24 VAC |
| | 48 VAC |
| | 220 VAC |
| | 240 VAC |
| | 12 VDC |
| DIN terminal with light | |
| Conduit terminal with light | |
| Without DIN connector | |
| Oil-free | |
| G thread | |
| NPT thread | |
| With bracket | |
| Special electrical entry direction | |

Dimensions → Page 198 and after



SMC

Courtesy of Steven Engineering, Inc - (800) 258-9200 - sales@steveneng.com - www.stevenengineering.com

# For Heated Water

∗ Can be used with air (up to 99°C) and water.
Note that the maximum operating pressure differential and flow rate characteristics should be within the specifications of the fluid used.



## Flow Rate Characteristics

**N.C.**

**Symbol**

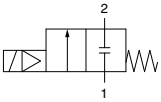


When the valve is closed, flow is blocked from port 1 to port 2. However, if the pressure in port 2 is higher than port 1, the valve will not be able to block the fluid and it will flow from port 2 to port 1.

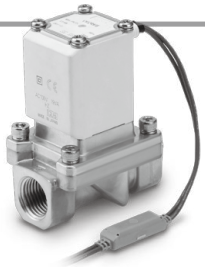

### Normally Closed (N.C.)

| Body material | Port size (Nominal diameter) | Orifice diameter (mmø) | Model | Min. operating pressure differential Note 1) (MPa) | Max. operating pressure differential Note 3) (MPa) | | Flow rate characteristics | | Max. system pressure Note 3) (MPa) | Weight Note 2) (g) |
|---|---|---|---|---|---|---|---|---|---|---|
| | | | | | AC | DC | Kv | Cv | | |
| C37, Stainless steel | 1/4 (8A) | 10 | **VXZ235** | 0 | 1.0 | 0.7 | 1.6 | 1.9 | 1.5 | 600 |
| | 3/8 (10A) | | | | | | 2.0 | 2.4 | | |
| | 1/2 (15A) | 15 | **VXZ245** | | | | 4.6 | 5.3 | | 720 |
| | 3/4 (20A) | 20 | **VXZ255** | | | 1.0 | 7.8 | 9.2 | | 1100 |
| | 1 (25A) | 25 | **VXZ265** | | | | 8.7 | 10.2 | | 1300 |

Note 1) The operation of the valve may be unstable due to the capacity of the pressure supply source such as pumps and compressors or the pressure loss by the orifice of piping. Please contact SMC to check if the required valve size can be used in the application. Please contact SMC for the compatibility of the circuit flow and valve size. (Refer to page 195.)
Note 2) Weight of grommet type. Add 10 g for conduit, 30 g for DIN terminal, and 60 g for conduit terminal type respectively.
Note 3) Refer to “Glossary of Terms” on page 202 for details on the maximum operating pressure differential and the maximum system pressure.

## Fluid and Ambient Temperature

| Fluid temperature (°C) | Ambient temperature (°C) |
|---|---|
| 1 to 99 | –20 to 60 |

Note) With no freezing

## Valve Leakage Rate

### Internal Leakage

| Seal material | Leakage rate (Water) Note 1) 2) |
|---|---|
| EPDM | 0.1 cm$^3$/min or less |

### External Leakage

| Seal material | Leakage rate (Water) Note 1) |
|---|---|
| EPDM | 0.1 cm$^3$/min or less |

Note 1) Leakage is the value at ambient temperature 20°C.
Note 2) Leakage is the value when the pressure differential ranges from 0.01 MPa to the maximum operating pressure differential.



Courtesy of Steven Engineering, Inc - (800) 258-9200 - sales@steveneng.com - www.stevenengineering.com

## Flow Rate Characteristics

**N.O.**

**Symbol**

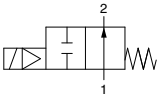


When the valve is closed, flow is blocked from port 1 to port 2. However, if the pressure in port 2 is higher than port 1, the valve will not be able to block the fluid and it will flow from port 2 to port 1.

### Normally Open (N.O.)

| Body material | Port size (Nominal diameter) | Orifice diameter (mmø) | Model | Min. operating pressure differential Note 1) (MPa) | Max. operating pressure differential Note 3) (MPa) | | Flow rate characteristics | | Max. system pressure Note 3) (MPa) | Weight Note 2) (g) |
|---|---|---|---|---|---|---|---|---|---|---|
| | | | | | AC | DC | Kv | Cv | | |
| C37, Stainless steel | 1/4 (8A) | 10 | **VXZ2A5** | 0 | 0.7 | 0.6 | 1.6 | 1.9 | 1.5 | 630 |
| | 3/8 (10A) | | | | | | 2.0 | 2.4 | | |
| | 1/2 (15A) | 15 | **VXZ2B5** | | | | 4.6 | 5.3 | | 750 |
| | 3/4 (20A) | 20 | **VXZ2C5** | | | | 7.8 | 9.2 | | 1150 |
| | 1 (25A) | 25 | **VXZ2D5** | | | | 8.7 | 10.2 | | 1350 |

Note 1) The operation of the valve may be unstable due to the capacity of the pressure supply source such as pumps and compressors or the pressure loss by the orifice of piping. Please contact SMC to check if the required valve size can be used in the application. Please contact SMC for the compatibility of the circuit flow and valve size. (Refer to page 195.)
Note 2) Weight of grommet type. Add 10 g for conduit, 30 g for DIN terminal, and 60 g for conduit terminal type respectively.
Note 3) Refer to "Glossary of Terms" on page 202 for details on the maximum operating pressure differential and the maximum system pressure.

## Fluid and Ambient Temperature

| Fluid temperature (°C) | Ambient temperature (°C) |
|---|---|
| 1 to 99 | –20 to 60 |

Note) With no freezing

## Valve Leakage Rate

### Internal Leakage

| Seal material | Leakage rate (Water) Note 1) 2) |
|---|---|
| EPDM | 0.1 cm$^3$/min or less |

### External Leakage

| Seal material | Leakage rate (Water) Note 1) |
|---|---|
| EPDM | 0.1 cm$^3$/min or less |

Note 1) Leakage is the value at ambient temperature 20°C.
Note 2) Leakage is the value when the pressure differential ranges from 0.01 MPa to the maximum operating pressure differential.


Courtesy of Steven Engineering, Inc - (800) 258-9200 - sales@steveneng.com - www.stevenengineering.com

## How to Order (Single Unit)

**VXZ2 [3] [5] [A] [B]**

**Fluid**

| | |
|---|---|
| 5 | For Heated water |

**Common Specifications**

| | |
|---|---|
| Seal material | EPDM |
| Coil insulation type | Class H |
| Thread type | Rc |

**Size/Valve type**

| Symbol | Body size | Valve type |
|---|---|---|
| 3 | 10A | N.C. |
| A | | N.O. |
| 4 | 15A | N.C. |
| B | | N.O. |
| 5 | 20A | N.C. |
| C | | N.O. |
| 6 | 25A | N.C. |
| D | | N.O. |

**Body material/Port size/Orifice diameter**

| Symbol | Body material | Port size | Orifice diameter |
|---|---|---|---|
| A | C37 | 1/4 | 10 |
| B | | 3/8 | |
| C | Stainless steel | 1/4 | |
| D | | 3/8 | |
| F | C37 | 1/2 | 15 |
| G | Stainless steel | | |
| H | C37 | 3/4 | 20 |
| J | Stainless steel | | |
| K | C37 | 1 | 25 |
| L | Stainless steel | | |

**Voltage/Electrical entry**

| Symbol | Voltage | Electrical entry |
|---|---|---|
| A | 24 VDC | Grommet 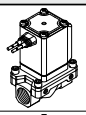 |
| B | 100 VAC | Grommet (With surge voltage suppressor) 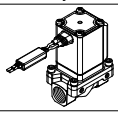 |
| C | 110 VAC | |
| D | 200 VAC | |
| E | 230 VAC | |
| G | 24 VDC | DIN terminal (With surge voltage suppressor Note) 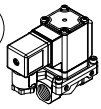 |
| H | 100 VAC | |
| J | 110 VAC | |
| K | 200 VAC | |
| L | 230 VAC | |
| N | 100 VAC | Conduit terminal (With surge voltage suppressor) 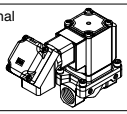 |
| P | 110 VAC | |
| Q | 200 VAC | |
| R | 230 VAC | |
| T | 100 VAC | Conduit (With surge voltage suppressor) 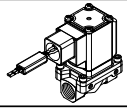 |
| U | 110 VAC | |
| V | 200 VAC | |
| W | 230 VAC | |
| Z | Other voltages | |

Note) For the class H type DIN terminal, use it in combination with the connector provided.

**For other special options, refer to pages 192 and 193.**

| | |
|---|---|
| Special voltage | 24 VAC |
| | 48 VAC |
| | 220 VAC |
| | 240 VAC |
| DIN terminal with light | |
| Conduit terminal with light | |
| Oil-free | |
| G thread | |
| NPT thread | |
| With bracket | |
| Special electrical entry direction | |

VX2
VXK
VXD
VXZ
VXS
VXB
VXE
VXP
VXR
VXH
VXF
VX3
VXA

Dimensions → Page 200



Courtesy of Steven Engineering, Inc - (800) 258-9200 - sales@steveneng.com - www.stevenengineering.com

# For High Temperature Oil

* Can be used with air (up to 99°C), water (up to 99°C) and oil. Note that the maximum operating pressure differential and flow rate characteristics should be within the specifications of the fluid used.

**⚠When the fluid is oil.**

**The kinematic viscosity must not exceed 50 mm²/s. The special construction of the armature adopted in the built-in full-wave rectifier type gives an improvement in OFF response by providing clearance on the absorbed surface when it is switched ON.**

## Flow Rate Characteristics

**N.C.**

**Symbol**

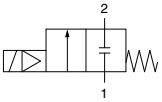


When the valve is closed, flow is blocked from port 1 to port 2. However, if the pressure in port 2 is higher than port 1, the valve will not be able to block the fluid and it will flow from port 2 to port 1.

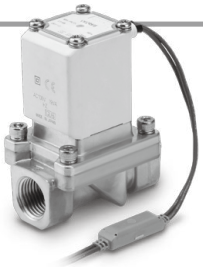

### Normally Closed (N.C.)

| Body material | Port size (Nominal diameter) | Orifice diameter (mmø) | Model | Min. operating pressure differential Note 1) (MPa) | Max. operating pressure differential Note 3) (MPa) | | Flow rate characteristics | | Max. system pressure Note 3) (MPa) | Weight Note 2) (g) |
|---|---|---|---|---|---|---|---|---|---|---|
| | | | | | AC | DC | Kv | Cv | | |
| C37, Stainless steel | 1/4 (8A) | 10 | **VXZ236** | 0 | 0.7 | | 1.6 | 1.9 | 1.5 | 600 |
| | 3/8 (10A) | | | | | | 2.0 | 2.4 | | |
| | 1/2 (15A) | 15 | **VXZ246** | | | | 4.6 | 5.3 | | 720 |
| | 3/4 (20A) | 20 | **VXZ256** | | | | 7.8 | 9.2 | | 1100 |
| | 1 (25A) | 25 | **VXZ266** | | | | 8.7 | 10.2 | | 1300 |

Note 1) The operation of the valve may be unstable due to the capacity of the pressure supply source such as pumps and compressors or the pressure loss by the orifice of piping. Please contact SMC to check if the required valve size can be used in the application. Please contact SMC for the compatibility of the circuit flow and valve size. (Refer to page 195.)
Note 2) Weight of grommet type. Add 10 g for conduit, 30 g for DIN terminal, and 60 g for conduit terminal type respectively.
Note 3) Refer to "Glossary of Terms" on page 202 for details on the maximum operating pressure differential and the maximum system pressure.

## Fluid and Ambient Temperature

| Fluid temperature (°C) | Ambient temperature (°C) |
|---|---|
| −5 Note) to 100 | −20 to 60 |

Note) Kinematic viscosity: 50 mm²/s or less

## Valve Leakage Rate

### Internal Leakage

| Seal material | Leakage rate (Oil) Note 1) 2) |
|---|---|
| FKM | 0.1 cm³/min or less |

### External Leakage

| Seal material | Leakage rate (Oil) Note 1) |
|---|---|
| FKM | 0.1 cm³/min or less |

Note 1) Leakage is the value at ambient temperature 20°C.
Note 2) Leakage is the value when the pressure differential ranges from 0.01 MPa to the maximum operating pressure differential.



SMC
Courtesy of Steven Engineering, Inc - (800) 258-9200 - sales@steveneng.com - www.stevenengineering.com

## Flow Rate Characteristics

**N.O.**

**Symbol**

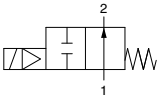


When the valve is closed, flow is blocked from port 1 to port 2. However, if the pressure in port 2 is higher than port 1, the valve will not be able to block the fluid and it will flow from port 2 to port 1.

### Normally Open (N.O.)

| Body material | Port size (Nominal diameter) | Orifice diameter (mmø) | Model | Min. operating pressure differential Note 1) (MPa) | Max. operating pressure differential Note 3) (MPa) | | Flow rate characteristics | | Max. system pressure Note 3) (MPa) | Weight Note 2) (g) |
|---|---|---|---|---|---|---|---|---|---|---|
| | | | | | AC | DC | Kv | Cv | | |
| C37, Stainless steel | 1/4 (8A) | 10 | **VXZ2A6** | 0 | 0.7 | 0.6 | 1.6 | 1.9 | 1.5 | 630 |
| | 3/8 (10A) | | | | | | 2.0 | 2.4 | | |
| | 1/2 (15A) | 15 | **VXZ2B6** | | | | 4.6 | 5.3 | | 750 |
| | 3/4 (20A) | 20 | **VXZ2C6** | | | | 7.8 | 9.2 | | 1150 |
| | 1 (25A) | 25 | **VXZ2D6** | | | | 8.7 | 10.2 | | 1350 |

Note 1) The operation of the valve may be unstable due to the capacity of the pressure supply source such as pumps and compressors or the pressure loss by the orifice of piping. Please contact SMC to check if the required valve size can be used in the application. Please contact SMC for the compatibility of the circuit flow and valve size. (Refer to page 195.)
Note 2) Weight of grommet type. Add 10 g for conduit, 30 g for DIN terminal, and 60 g for conduit terminal type respectively.
Note 3) Refer to "Glossary of Terms" on page 202 for details on the maximum operating pressure differential and the maximum system pressure.

## Fluid and Ambient Temperature

| Fluid temperature (°C) | Ambient temperature (°C) |
|---|---|
| −5 Note) to 100 | −20 to 60 |

Note) Kinematic viscosity: 50 $mm^2/s$ or less

## Valve Leakage Rate

### Internal Leakage

| Seal material | Leakage rate (Oil) Note 1) 2) |
|---|---|
| FKM | 0.1 $cm^3$/min or less |

### External Leakage

| Seal material | Leakage rate (Oil) Note 1) |
|---|---|
| FKM | 0.1 $cm^3$/min or less |

Note 1) Leakage is the value at ambient temperature 20°C.
Note 2) Leakage is the value when the pressure differential ranges from 0.01 MPa to the maximum operating pressure differential.



Courtesy of Steven Engineering, Inc - (800) 258-9200 - sales@steveneng.com - www.stevenengineering.com

## How to Order (Single Unit)

**VXZ2 3 6 A B**

**Fluid**

| | |
|---|---|
| 6 | For High temperature oil |

**Common Specifications**

| | |
|---|---|
| Seal material | FKM |
| Coil insulation type | Class H |
| Thread type | Rc |

**Size/Valve type**

| Symbol | Body size | Valve type |
|---|---|---|
| 3 | 10A | N.C. |
| A | | N.O. |
| 4 | 15A | N.C. |
| B | | N.O. |
| 5 | 20A | N.C. |
| C | | N.O. |
| 6 | 25A | N.C. |
| D | | N.O. |

**Body material/Port size/Orifice diameter**

| Symbol | Body material | Port size | Orifice diameter |
|---|---|---|---|
| A | C37 | 1/4 | 10 |
| B | | 3/8 | |
| C | Stainless steel | 1/4 | |
| D | | 3/8 | |
| F | C37 | 1/2 | 15 |
| G | Stainless steel | | |
| H | C37 | 3/4 | 20 |
| J | Stainless steel | | |
| K | C37 | 1 | 25 |
| L | Stainless steel | | |

**Voltage/Electrical entry**

| Symbol | Voltage | Electrical entry |
|---|---|---|
| A | 24 VDC | Grommet |
| B | 100 VAC | Grommet (With surge voltage suppressor) |
| C | 110 VAC | |
| D | 200 VAC | |
| E | 230 VAC | |
| G | 24 VDC | DIN terminal (With surge voltage suppressor Note) |
| H | 100 VAC | |
| J | 110 VAC | |
| K | 200 VAC | |
| L | 230 VAC | |
| N | 100 VAC | Conduit terminal (With surge voltage suppressor) |
| P | 110 VAC | |
| Q | 200 VAC | |
| R | 230 VAC | |
| T | 100 VAC | Conduit (With surge voltage suppressor) |
| U | 110 VAC | |
| V | 200 VAC | |
| W | 230 VAC | |
| Z | Other voltages | |

Note) For the class H type DIN terminal, use it in combination with the connector provided.

**For other special options, refer to pages 192 and 193.**

| | |
|---|---|
| Special voltage | 24 VAC |
| | 48 VAC |
| | 220 VAC |
| | 240 VAC |
| DIN terminal with light | |
| Conduit terminal with light | |
| Oil-free | |
| G thread | |
| NPT thread | |
| With bracket | |
| Special electrical entry direction | |

Dimensions → Page 200



Courtesy of Steven Engineering, Inc - (800) 258-9200 - sales@steveneng.com - www.stevenengineering.com

# Other Special Options

## Electrical Options

**VXZ2 3 0 A Z 1A**

- Enter standard product number.
- Electrical option
- Special voltage/Electrical entry/Electrical option

| Specification | Symbol | Class H* | Voltage | Electrical entry |
|---|---|---|---|---|
| Special voltage | 1A | ● | 48 VAC | Grommet (With surge voltage suppressor) |
| | 1B | ● | 220 VAC | |
| | 1C | ● | 240 VAC | |
| | 1U | ● | 24 VAC | |
| | 1D | — | 12 VDC | Grommet |
| | 1E | — | 12 VDC | Grommet (With surge voltage suppressor) |
| | 1F | ● | 48 VAC | DIN terminal (With surge voltage suppressor) |
| | 1G | ● | 220 VAC | |
| | 1H | ● | 240 VAC | |
| | 1V | ● | 24 VAC | |
| | 1J | — | 12 VDC | |
| | 1K | ● | 48 VAC | Conduit terminal (With surge voltage suppressor) |
| | 1L | ● | 220 VAC | |
| | 1M | ● | 240 VAC | |
| | 1W | ● | 24 VAC | |
| | 1N | — | 12 VDC | |
| | 1P | ● | 48 VAC | Conduit (With surge voltage suppressor) |
| | 1Q | ● | 220 VAC | |
| | 1R | ● | 240 VAC | |
| | 1Y | ● | 24 VAC | |
| | 1S | — | 12 VDC | |
| | 1T | — | 12 VDC | Flat terminal |
| With light | 2A | ● | 24 VDC | DIN terminal (With surge voltage suppressor) |
| | 2B | ● | 100 VAC | |
| | 2C | ● | 110 VAC | |
| | 2D | ● | 200 VAC | |
| | 2E | ● | 230 VAC | |
| | 2F | ● | 48 VAC | |
| | 2G | ● | 220 VAC | |
| | 2H | ● | 240 VAC | |
| | 2V | ● | 24 VAC | |
| | 2J | — | 12 VDC | |
| | 2K | — | 24 VDC | Conduit terminal (With surge voltage suppressor) |
| | 2L | ● | 100 VAC | |
| | 2M | ● | 110 VAC | |
| | 2N | ● | 200 VAC | |
| | 2P | ● | 230 VAC | |
| | 2Q | ● | 48 VAC | |
| | 2R | ● | 220 VAC | |
| | 2S | ● | 240 VAC | |
| | 2W | ● | 24 VAC | |
| | 2T | — | 12 VDC | |
| Without DIN connector | 3A | — | 24 VDC | DIN terminal (With surge voltage suppressor) |
| | 3B | — | 100 VAC | |
| | 3C | — | 110 VAC | |
| | 3D | — | 200 VAC | |
| | 3E | — | 230 VAC | |
| | 3F | — | 48 VAC | |
| | 3G | — | 220 VAC | |
| | 3H | — | 240 VAC | |
| | 3V | — | 24 VAC | |
| | 3J | — | 12 VDC | |

●: Also applicable to Class "H" coil.
Options marked with ● are available for Class "H" coil.
Applicable for all when the coil insulation class is Class "B".

## Other Options

**Low concentration ozone resistant and applicable to deionized water**
**Oil-free**
**Port thread**

**VXZ2 3 0 A A Z**

- Enter standard product number.
- Other option

**Low concentration ozone resistant and applicable to deionized water/Oil-free/Port thread**

| Symbol | Low concentration ozone resistant and applicable to deionized water *1, *3 (Seal material: FKM) | Oil-free | Port thread |
|---|---|---|---|
| Nil | — | — | Rc, One-touch fitting*2 |
| A | — | — | G |
| B | | | NPT |
| C | ○ | — | Rc, One-touch fitting*2 |
| D | — | ○ | G |
| E | | | NPT |
| F | ○ | — | G |
| G | | | NPT |
| H | ○ | ○ | Rc, One-touch fitting*2 |
| K | | | G |
| L | | | NPT |
| Z | — | ○ | Rc, One-touch fitting*2 |

∗1 Applicable to air (VXZ2□0) and water (VXZ2□2).
∗2 When the body is resin, One-touch fittings are equipped as standard.
∗3 When using deionized water or any other fluid that may corrode C37 (brass), select a stainless steel body.

### Made to Order

**<Special lead wire length>**

Produced upon receipt of order. Please contact SMC for lead times.

**VXZ□□□□XL□**

- Lead wire length

| | |
|---|---|
| XL1 | 600 mm |
| XL2 | 1000 mm |
| XL3 | 1500 mm |
| XL4 | 3000 mm |

∗ Enter symbols in the order below when ordering a combination of electrical option, other option, etc.

Example) **VXZ2 3 2 A Z 1A Z XB A**

- Electrical option
- Other option
- Special electrical entry direction
- With bracket





Courtesy of Steven Engineering, Inc - (800) 258-9200 - sales@steveneng.com - www.stevenengineering.com

## Installation Options
### (Mounting Option/Special Electrical Entry Direction)

**The following shows combinations that can be selected using installation options.**

**Combinations**

| Symbol | Special electrical entry direction | With bracket | Seal material: EPDM |
|---|---|---|---|
| XC□ | ● | | |
| XB□ | ● | ● | |
| X332□ | ● | ● | ● |

### Special Electrical Entry Direction

**VXZ2 □□□□ XC A**

**Enter standard product number.**

| Symbol | Rotation angle |
|---|---|
| A | 90° (90°) IN → OUT |
| B | 180° (180°) IN → OUT |
| C | 270° (270°) IN → OUT |

∗ Available for the VXZ2$^{3}_{A}$ to 2$^{6}_{D}$.

### With Bracket/Special Electrical Entry Direction

**VXZ2 □□□□ XB A**

**Enter standard product number.**

| Symbol | Rotation angle |
|---|---|
| Nil | Standard: IN → OUT |
| A | 90° (90°) IN → OUT |
| B | 180° (180°) IN → OUT |
| C | 270° (270°) IN → OUT |

∗1 Available for the VXZ2$^{3}_{A}$ to 2$^{6}_{D}$.
∗2 Bracket is attached as standard with the resin body type (VXZ2$^{3}_{A}$0$^{C}_{E}$D□), so it is no necessary to add XB to the part number.
∗3 Bracket is packed in the same container as the main body.

**VXZ Bracket mounting dimensions**

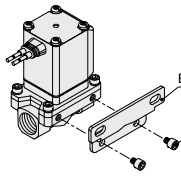


Tightening torque of 2 to 3 N·m
VXZ23/24: 2 to 3 N·m
VXZ25/26: 4 to 5 N·m

∗ Enter symbols in the order below when ordering a combination of electrical option, other option, etc.

Example) **VXZ2 3 2 A Z 1A Z XB A**

- 1A: Electrical option
- Z: Other option
- XB: With bracket
- A: Special electrical entry direction



SMC
Courtesy of Steven Engineering, Inc - (800) 258-9200 - sales@steveneng.com - www.stevenengineering.com

## Installation Options
### (Mounting Option/Special Electrical Entry Direction)

### Seal Material: EPDM/With Bracket/ Special Electrical Entry Direction

**VXZ2 □ 02 □□ X332 □**

**Enter standard product number.**

**Seal material: EPDM**

**With bracket/Special electrical entry direction**

| Symbol | Specifications | |
|---|---|---|
| | Electrical entry direction | Bracket |
| **Nil** | IN side (Standard) | None |
| **A** | 90° | |
| **B** | 180° | |
| **C** | 270° | |
| **D** | IN side (Standard) | With bracket*1 |
| **E** | 90° | |
| **F** | 180° | |
| **G** | 270° | |

*1 Not available for resin body type of the VXZ2$^{3}_{A}$.
*2 "Other options", which can be combined, are Nil, A, B, D, E, Z (Oil-free, G thread specifications, NPT thread specifications).
*3 Available for air and water.

**Electrical entry direction**

| Symbol | VXZ2$^{3}_{A}$ to VXZ2$^{6}_{D}$ | Symbol | VXZ2$^{3}_{A}$ to VXZ2$^{6}_{D}$ |
|---|---|---|---|
| **Nil · D** | **Standard** IN OUT | **A · E** | **90°** IN OUT |
| **B · F** | **180°** IN OUT | **C · G** | **270°** IN OUT |

* Enter symbols in the order below when ordering a combination of electrical option, other option, seal material: EPDM, with bracket, mounting holes on the bottom side of the body and special electrical entry direction.

Example) **VXZ2 3 2 A Z 1A Z X332 A**

- **Electrical option**
- **Other option**
- **Seal material: EPDM/ With bracket/ Special electrical entry direction**





Courtesy of Steven Engineering, Inc - (800) 258-9200 - sales@steveneng.com - www.stevenengineering.com

# Construction

## Normally Closed (N.C.)

### Body material: Aluminum, C37, Stainless steel

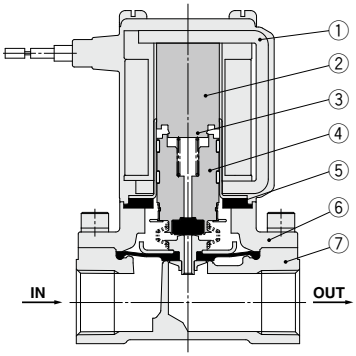


**Component Parts**

| No. | Description | Material |
|---|---|---|
| 1 | **Solenoid coil** | Cu + Fe + Resin |
| 2 | **Tube assembly** | Stainless steel |
| 3 | **Return spring** | Stainless steel |
| 4 | **Armature/Diaphragm assembly** | Stainless steel, NBR, FKM, EPDM |
| 5 | **Stopper** | NBR, FKM, EPDM |
| 6 | **Bonnet** | C37, Stainless steel, Aluminum |
| 7 | **Body** | C37, Stainless steel, Aluminum |

### Body material: Resin

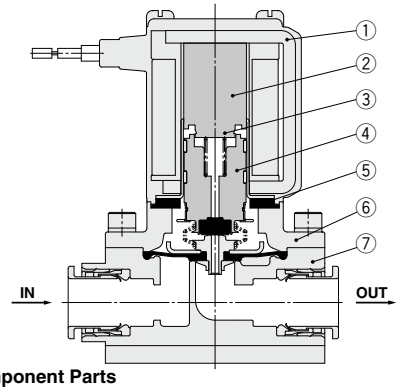


**Component Parts**

| No. | Description | Material |
|---|---|---|
| 1 | **Solenoid coil** | Cu + Fe + Resin |
| 2 | **Tube assembly** | Stainless steel |
| 3 | **Return spring** | Stainless steel |
| 4 | **Armature/Diaphragm assembly** | Stainless steel, NBR, FKM |
| 5 | **Stopper** | NBR, FKM |
| 6 | **Bonnet** | Aluminum |
| 7 | **Body** | Resin (PBT) |

## Normally Open (N.O.)

### Body material: Aluminum, C37, Stainless steel

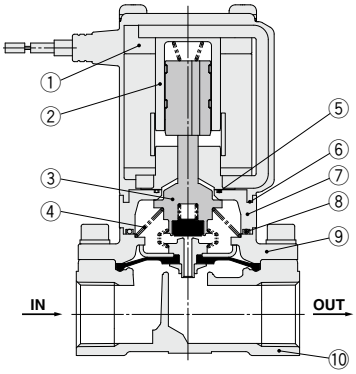


**Component Parts**

| No. | Description | Material |
|---|---|---|
| 1 | **Solenoid coil** | Cu + Fe + Resin |
| 2 | **Sleeve assembly** | Stainless steel, Resin (PPS) |
| 3 | **Push rod/Diaphragm assembly** | Stainless steel, NBR, FKM, EPDM |
| 4 | **Spring** | Stainless steel |
| 5 | **O-ring A** | NBR, FKM, EPDM |
| 6 | **O-ring B** | NBR, FKM, EPDM |
| 7 | **Adapter** | Resin (PPS) |
| 8 | **O-ring C** | NBR, FKM, EPDM |
| 9 | **Bonnet** | Aluminum, C37, Stainless steel |
| 10 | **Body** | Aluminum, C37, Stainless steel |

### Body material: Resin

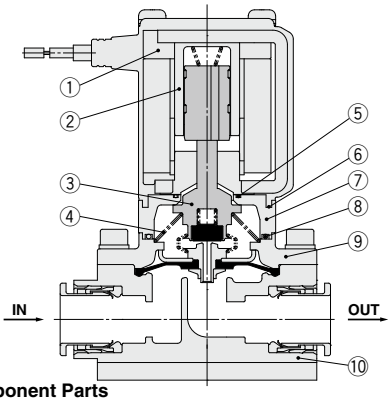


**Component Parts**

| No. | Description | Material |
|---|---|---|
| 1 | **Solenoid coil** | Cu + Fe + Resin |
| 2 | **Sleeve assembly** | Stainless steel, Resin (PPS) |
| 3 | **Push rod/Diaphragm assembly** | Stainless steel, NBR, FKM |
| 4 | **Spring** | Stainless steel |
| 5 | **O-ring A** | NBR, FKM |
| 6 | **O-ring B** | NBR, FKM |
| 7 | **Adapter** | Resin (PPS) |
| 8 | **O-ring C** | NBR, FKM |
| 9 | **Bonnet** | Aluminum |
| 10 | **Body** | Resin (PBT) |



Courtesy of Steven Engineering, Inc - (800) 258-9200 - sales@steveneng.com - www.stevenengineering.com

## Working Principle

**De-energized**

The fluid enters from the IN goes through the supply orifice to fill the pressure action chamber. Main valve is closed by the pressure in the pressure action chamber and the reaction force of the return spring.

**Energized (Pilot valve open)**

When the coil is energized, the armature is attracted causing the pilot orifice to opening. The fluid filling the pressure action chamber flows to the OUT side through the pilot orifice.

**Energized (Main valve open)**

The pressure in the pressure action chamber decreases by discharging fluid through the pilot orifice. Because the force which pushes down the valve is reduced by the discharge of the fluid, the force that pushes up the main valve overcomes the push down force and opens the main valve. The main valve opens by the lift spring reaction force even if pressure on the IN side is 0 MPa or very low pressure.

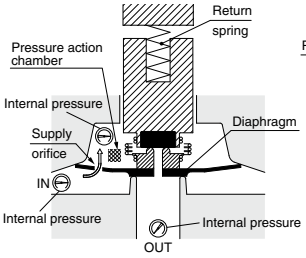


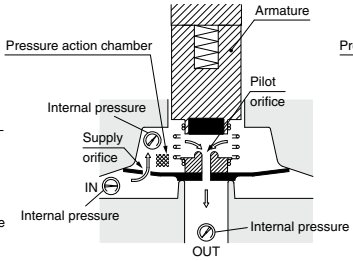


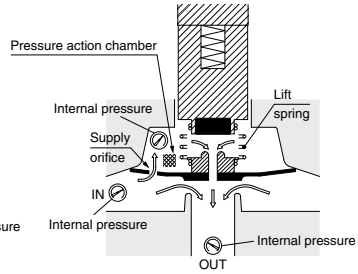


## ⚠Warning

**Unstable flow may occur with the product under the following conditions: • low flow from the pump or compressor, etc. • use of several elbows or tees in the circuit, or • thin nozzles installed at the end of the piping etc. This can cause valve opening/closing failure, or oscillation, and cause a valve malfunction. If products are used with vacuum, then the vacuum level can be unstable due to these conditions. Please contact SMC to check if the valve can be used in the application by providing the relevant fluid circuit.**





Courtesy of Steven Engineering, Inc - (800) 258-9200 - sales@steveneng.com - www.stevenengineering.com

## Dimensions/Body Material: Resin (One-touch Fitting Type)

### Grommet

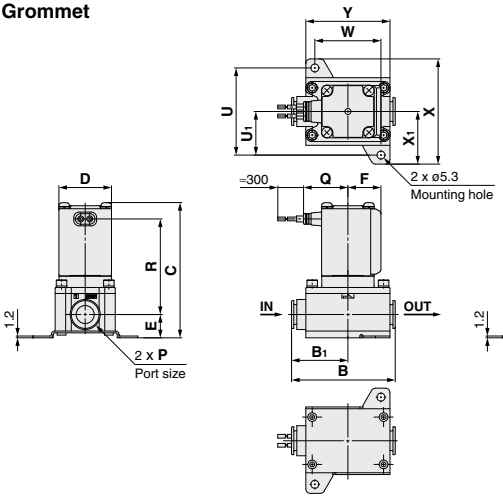


### Grommet (with surge voltage suppressor)

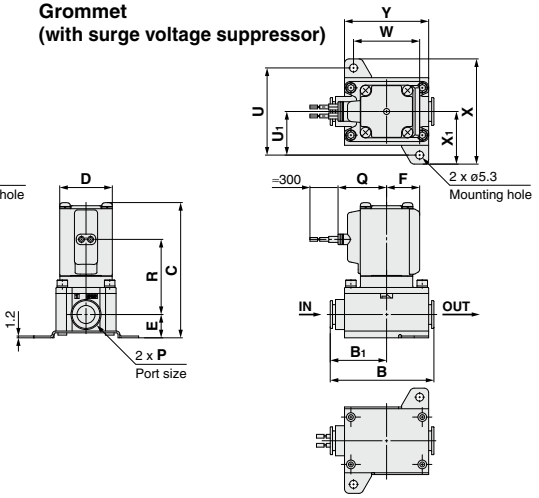


### DIN terminal

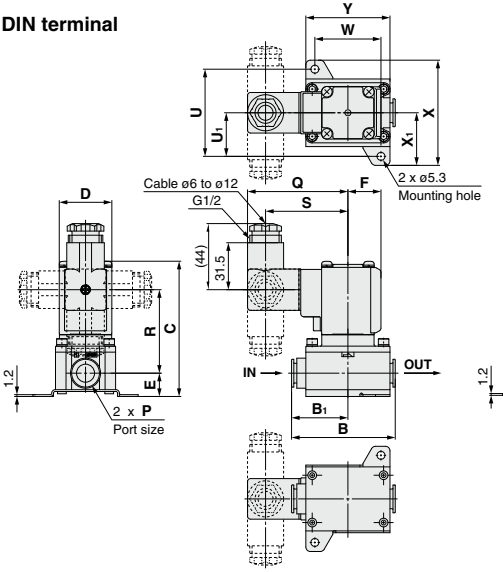


### Conduit terminal

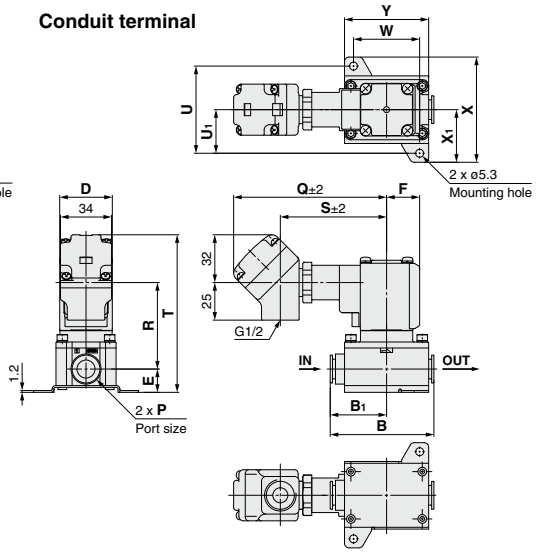


(mm)

| Model | One-touch fitting P | B | B1 | C | D | E | F | Bracket mounting | | | | | |
|---|---|---|---|---|---|---|---|---|---|---|---|---|---|
| | | | | | | | | U | U1 | W | X | X1 | Y |
| VXZ2$^{3}_{A}$ | ø10, ø3/8", ø12 | 69 | 37.5 | 90 (96.5) | 35 | 15.5 | 22 | 54 | 27 | 44 | 65 | 32.5 | 56 |

**For information on handling One-touch fittings and appropriate tubing, refer to page 211 and the KQ2 series One-touch fittings in Best Pneumatics No. 7.**

| Model | One-touch fitting P | Electrical entry | | | | | | | | | | |
|---|---|---|---|---|---|---|---|---|---|---|---|---|
| | | Grommet | | Grommet (with surge voltage suppressor) | | DIN terminal | | | Conduit terminal | | | |
| | | Q | R | Q | R | Q | R | S | Q | R | S | T |
| VXZ2$^{3}_{A}$ | ø10, ø3/8", ø12 | 29.5 | 63.5 (70) | 32.5 | 50 (56.5) | 67 | 55.5 (62) | 55 | 102 | 57.5 (64) | 71 | 105 (111.5) |

( ) are the dimensions of Normally Open (N.O.).



SMC

Courtesy of Steven Engineering, Inc - (800) 258-9200 - sales@steveneng.com - www.stevenengineering.com

## Dimensions/Body Material: Resin (One-touch Fitting Type)

### Conduit

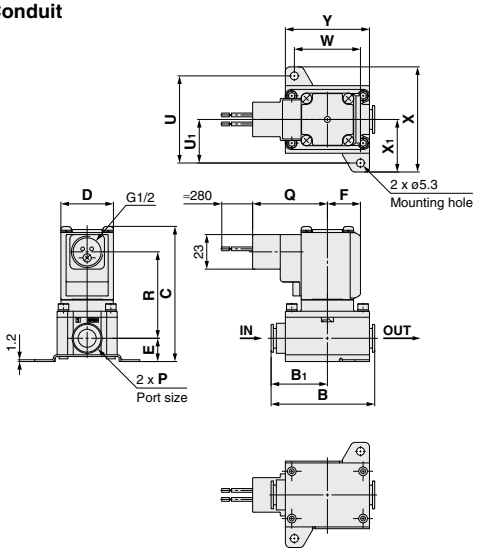


### Flat terminal type

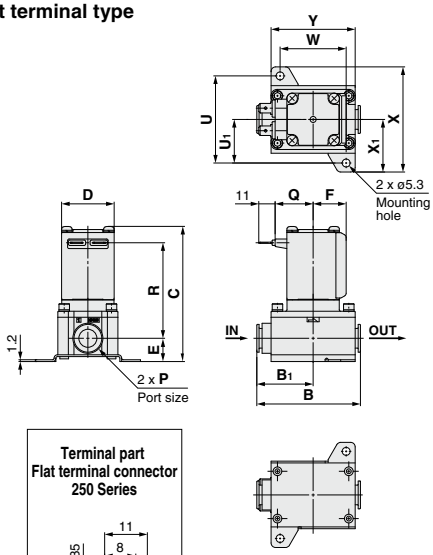


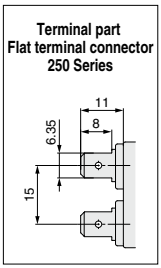


(mm)

| Model | One-touch fitting P | B | B1 | C | D | E | F | Bracket mounting | | | | | |
|---|---|---|---|---|---|---|---|---|---|---|---|---|---|
| | | | | | | | | U | U1 | W | X | X1 | Y |
| VXZ2$^{3}_{A}$ | ø10, ø3/8", ø12 | 69 | 37.5 | 90 (96.5) | 35 | 15.5 | 22 | 54 | 27 | 44 | 65 | 32.5 | 56 |

| Model | One-touch fitting P | Electrical entry | | | |
|---|---|---|---|---|---|
| | | Conduit | | Flat terminal | |
| | | Q | R | Q | R |
| VXZ2$^{3}_{A}$ | ø10, ø3/8", ø12 | 50 | 57.5 (64) | 25.5 | 63.5 (70) |

( ) are the dimensions of Normally Open (N.O.).



SMC
Courtesy of Steven Engineering, Inc - (800) 258-9200 - sales@steveneng.com - www.stevenengineering.com

**For Air, Water, Oil**

## Dimensions/Body Material: Aluminum, C37, Stainless Steel

### Grommet

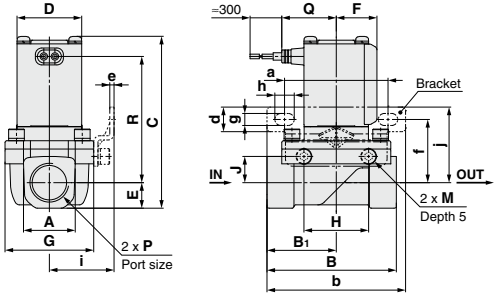


### Grommet (with surge voltage suppressor)

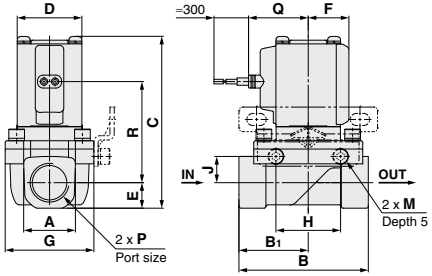


### DIN terminal

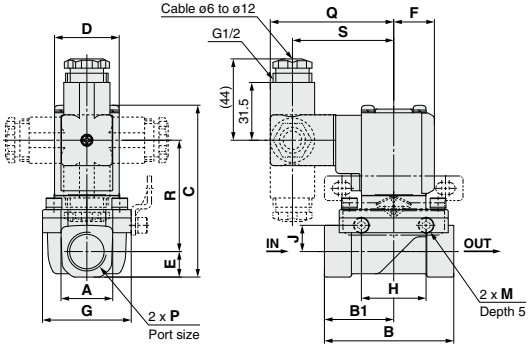


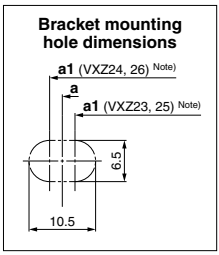


(mm)

| Model | Port size P | A | B | $B_1$ | C | D | E | F | G | H | J | M |
|---|---|---|---|---|---|---|---|---|---|---|---|---|
| VXZ2$^{3}_{A}$ | 1/4, 3/8 | 21 <22> | 57 | 28.5 | 85 (91.5) | 35 | 10.5 | 22 | 40 | 35 | 10 | M5 |
| VXZ2$^{4}_{B}$ | 1/2 | 28 | 70 | 37.5 | 93 (99.5) | 35 | 14 | 22 | 48 | 35 | 14.2 | M5 |
| VXZ2$^{5}_{C}$ | 3/4 | 33.5 | 71 | 38.5 | 104 (110.5) | 40 | 17 | 24.5 | 62 | 33 | 15.2 | M6 |
| VXZ2$^{6}_{D}$ | 1 | 42 | 95 | 49.5 | 110 (116) | 40 | 20 | 24.5 | 66 | 37 | 17.2 | M6 |

| Model | Port size P | Bracket mounting | | | | | | | | | |
|---|---|---|---|---|---|---|---|---|---|---|---|
| | | a | a1 Note) | b | d | e | f | g | h | i | j |
| VXZ2$^{3}_{A}$ | 1/4, 3/8 | 56 | 52 | 75 | 13.5 | 2.3 | 30 | 6.5 | 10.5 | 31 | 37 |
| VXZ2$^{4}_{B}$ | 1/2 | 56 | 60 | 75 | | 2.3 | 34.5 | 6.5 | 10.5 | 35 | 41 |
| VXZ2$^{5}_{C}$ | 3/4 | 70.5 | 68 | 92 | | 2.3 | 39 | 6.5 | 10.5 | 43 | 46 |
| VXZ2$^{6}_{D}$ | 1 | 70.5 | 73 | 92 | | 2.3 | 41 | 6.5 | 10.5 | 45 | 48 |

| Model | Port size P | Electrical entry | | | | | | |
|---|---|---|---|---|---|---|---|---|
| | | Grommet | | Grommet (with surge voltage suppressor) | | DIN terminal | | |
| | | Q | R | Q | R | Q | R | S |
| VXZ2$^{3}_{A}$ | 1/4, 3/8 | 29.5 | 63.5 (70) | 32.5 | 50 (56.5) | 67 | 55.5 (62) | 55 |
| VXZ2$^{4}_{B}$ | 1/2 | 29.5 | 68.5 (74.5) | 32.5 | 55 (61) | 67 | 60.5 (66.5) | 55 |
| VXZ2$^{5}_{C}$ | 3/4 | 32 | 76.5 (83) | 35 | 63 (69.5) | 69.5 | 68.5 (75) | 57.5 |
| VXZ2$^{6}_{D}$ | 1 | 32 | 79.5 (85) | 35 | 66 (71.5) | 69.5 | 71.5 (77) | 57.5 |

( ) are the dimensions of Normally Open (N.O.). < > are the dimensions of aluminum body.
Note) Old VXZ bracket mounting hole center position



SMC

Courtesy of Steven Engineering, Inc - (800) 258-9200 - sales@steveneng.com - www.stevenengineering.com

## Dimensions/Body Material: Aluminum, C37, Stainless Steel

### Conduit terminal

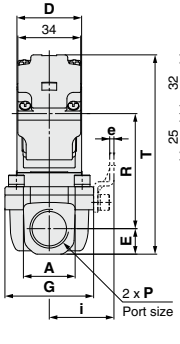


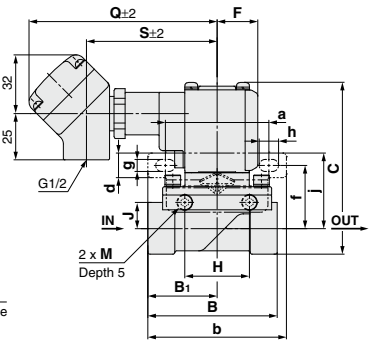


### Conduit

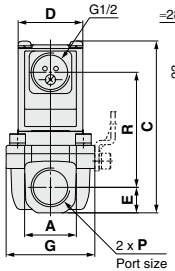


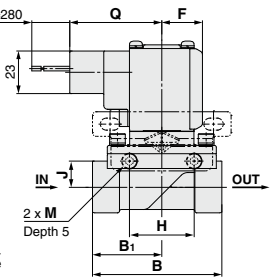


### Flat terminal type

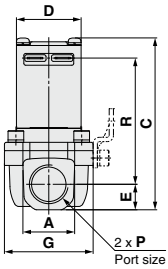


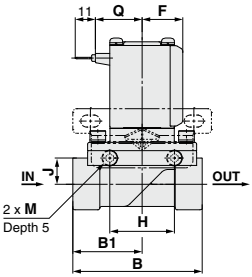


**Terminal part**
**Flat terminal connector**
**250 Series**

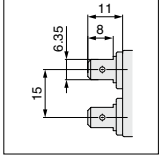


**Bracket mounting hole dimensions**

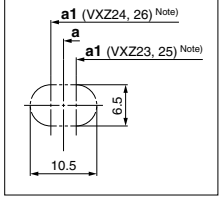


(mm)

| Model | Port size P | A | B | $B_1$ | C | D | E | F | G | H | J | M |
|---|---|---|---|---|---|---|---|---|---|---|---|---|
| VXZ2$^{3}_{A}$ | 1/4, 3/8 | 21 <22> | 57 | 28.5 | 85 (91.5) | 35 | 10.5 | 22 | 40 | 35 | 10 | M5 |
| VXZ2$^{4}_{B}$ | 1/2 | 28 | 70 | 37.5 | 93 (99.5) | 35 | 14 | 22 | 48 | 35 | 14.2 | M5 |
| VXZ2$^{5}_{C}$ | 3/4 | 33.5 | 71 | 38.5 | 104 (110.5) | 40 | 17 | 24.5 | 62 | 33 | 15.2 | M6 |
| VXZ2$^{5}_{D}$ | 1 | 42 | 95 | 49.5 | 110 (116) | 40 | 20 | 24.5 | 66 | 37 | 17.2 | M6 |

| Model | Port size P | Bracket mounting | | | | | | | | | |
|---|---|---|---|---|---|---|---|---|---|---|---|
| | | a | a1 Note) | b | d | e | f | g | h | i | j |
| VXZ2$^{3}_{A}$ | 1/4, 3/8 | 56 | 52 | 75 | 13.5 | 2.3 | 30 | 6.5 | 10.5 | 31 | 37 |
| VXZ2$^{4}_{B}$ | 1/2 | 56 | 60 | 75 | | 2.3 | 34.5 | 6.5 | 10.5 | 35 | 41 |
| VXZ2$^{5}_{C}$ | 3/4 | 70.5 | 68 | 92 | | 2.3 | 39 | 6.5 | 10.5 | 43 | 46 |
| VXZ2$^{5}_{D}$ | 1 | 70.5 | 73 | 92 | | 2.3 | 41 | 6.5 | 10.5 | 45 | 48 |

| Model | Port size P | Electrical entry | | | | | | | |
|---|---|---|---|---|---|---|---|---|---|
| | | Conduit terminal | | | | Conduit | | Flat terminal | |
| | | Q | R | S | T | Q | R | Q | R |
| VXZ2$^{3}_{A}$ | 1/4, 3/8 | 102 | 57.5 (64) | 71 | 100 (106.5) | 50 | 57.5 (64) | 25.5 | 63.5 (70) |
| VXZ2$^{4}_{B}$ | 1/2 | 102 | 62.5 (68.5) | 71 | 108 (114.5) | 50 | 62.5 (68.5) | 25.5 | 68.5 (74.5) |
| VXZ2$^{5}_{C}$ | 3/4 | 104.5 | 70.5 (77) | 73.5 | 119 (126) | 52.5 | 70.5 (77) | 28 | 76.5 (82.5) |
| VXZ2$^{5}_{D}$ | 1 | 104.5 | 73.5 (79) | 73.5 | 125 (131) | 52.5 | 73.5 (79) | 28 | 79.5 (85) |

( ) are the dimensions of Normally Open (N.O.). < > are the dimensions of aluminum body.
Note) Old VXZ bracket mounting hole center position




Courtesy of Steven Engineering, Inc - (800) 258-9200 - sales@steveneng.com - www.stevenengineering.com

**For Heated Water, High Temperature Oil**

## Dimensions/Body Material: C37, Stainless Steel

### Grommet

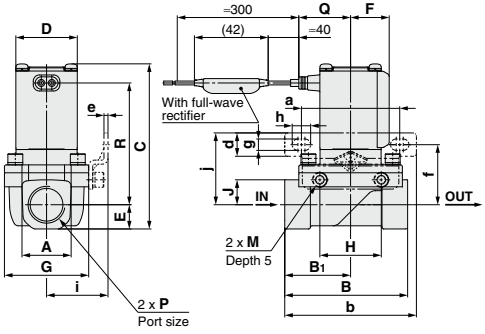


### Conduit terminal

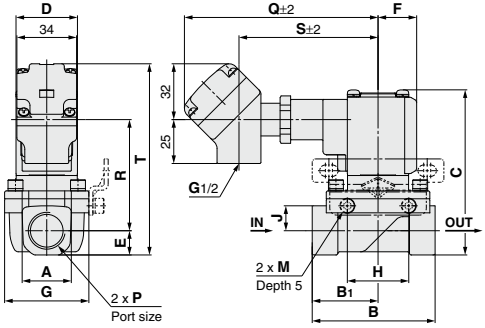


### Conduit

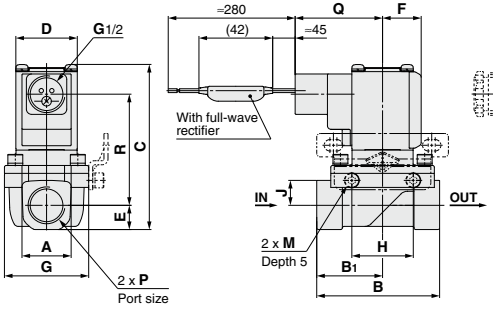


### DIN terminal

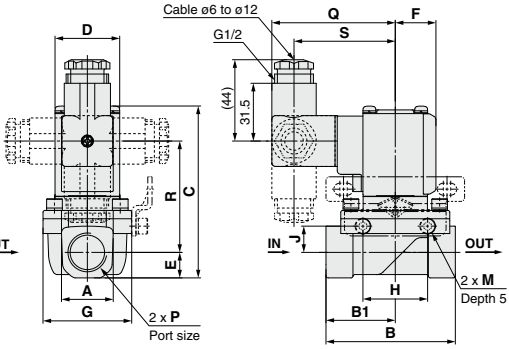


(mm)

| Model | Port size P | A | B | $B_1$ | C | D | E | F | G | H | J | M |
|---|---|---|---|---|---|---|---|---|---|---|---|---|
| VXZ2$^{3}_{A}$ | 1/4, 3/8 | 21 | 57 | 28.5 | 85 (91.5) | 35 | 10.5 | 22 | 40 | 35 | 10 | M5 |
| VXZ2$^{4}_{B}$ | 1/2 | 28 | 70 | 37.5 | 93 (99.5) | 35 | 14 | 22 | 48 | 35 | 14.2 | M5 |
| VXZ2$^{5}_{C}$ | 3/4 | 33.5 | 71 | 38.5 | 104 (110.5) | 40 | 17 | 24.5 | 62 | 33 | 15.2 | M6 |
| VXZ2$^{6}_{D}$ | 1 | 42 | 95 | 49.5 | 110 (116) | 40 | 20 | 24.5 | 66 | 37 | 17.2 | M6 |

| Model | Port size P | Bracket mounting | | | | | | | | | |
|---|---|---|---|---|---|---|---|---|---|---|---|
| | | a | a1 Note) | b | d | e | f | g | h | i | j |
| VXZ2$^{3}_{A}$ | 1/4, 3/8 | 56 | 52 | 75 | 13.5 | 2.3 | 30 | 6.5 | 10.5 | 31 | 37 |
| VXZ2$^{4}_{B}$ | 1/2 | 56 | 60 | 75 | | 2.3 | 34.5 | 6.5 | 10.5 | 35 | 41 |
| VXZ2$^{5}_{C}$ | 3/4 | 70.5 | 68 | 92 | | 2.3 | 39 | 6.5 | 10.5 | 43 | 46 |
| VXZ2$^{6}_{D}$ | 1 | 70.5 | 73 | 92 | | 2.3 | 41 | 6.5 | 10.5 | 45 | 48 |

**Bracket mounting hole dimensions**

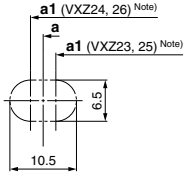


| Model | Port size P | Electrical entry | | | | | | | | | | |
|---|---|---|---|---|---|---|---|---|---|---|---|---|
| | | Grommet | | Conduit terminal | | | | Conduit | | DIN terminal | | |
| | | Q | R | Q | R | S | T | Q | R | Q | R | S |
| VXZ2$^{3}_{A}$ | 1/4, 3/8 | 29.5 | 63.5 (70) | 110.5 | 57.5 (64) | 79.5 | 100 (106.5) | 50 | 57.5 (64) | 67 | 55.5 (62) | 55 |
| VXZ2$^{4}_{B}$ | 1/2 | 29.5 | 68.5 (74.5) | 110.5 | 62.5 (68.5) | 79.5 | 108 (114.5) | 50 | 62.5 (68.5) | 67 | 60.5 (66.5) | 55 |
| VXZ2$^{5}_{C}$ | 3/4 | 32 | 76.5 (83) | 113 | 70.5 (77) | 82 | 119 (126) | 52.5 | 70.5 (77) | 69.5 | 68.5 (75) | 57.5 |
| VXZ2$^{6}_{D}$ | 1 | 32 | 79.5 (85) | 113 | 73.5 (79) | 82 | 125 (131) | 52.5 | 73.5 (79) | 69.5 | 71.5 (77) | 57.5 |

( ) are the dimensions of Normally Open (N.O.).
Note) Old VXZ bracket mounting hole center position



SMC
Courtesy of Steven Engineering, Inc - (800) 258-9200 - sales@steveneng.com - www.stevenengineering.com

## Replacement Parts

### ● DIN Connector Part No.

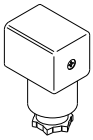

**<Coil Insulation Type/For Class B>**

| Electrical option | Rated voltage | Connector part no. |
|---|---|---|
| None | 24 VDC | **C18312G6GCU** |
| | 12 VDC | |
| | 100 VAC | |
| | 110 VAC | |
| | 200 VAC | |
| | 220 VAC | |
| | 230 VAC | |
| | 240 VAC | |
| | 24 VAC | |
| | 48 VAC | |
| With light | 24 VDC | **GDM2A-L5** |
| | 12 VDC | **GDM2A-L6** |
| | 100 VAC | **GDM2A-L1** |
| | 110 VAC | **GDM2A-L1** |
| | 200 VAC | **GDM2A-L2** |
| | 220 VAC | **GDM2A-L2** |
| | 230 VAC | **GDM2A-L2** |
| | 240 VAC | **GDM2A-L2** |
| | 24 VAC | **GDM2A-L5** |
| | 48 VAC | **GDM2A-L15** |

**<Coil Insulation Type/For Class H>**

| Electrical option | Rated voltage | Connector part no. |
|---|---|---|
| None | 24 VDC | **GDM2A-G-S5** |
| | 100 VAC | **GDM2A-R** |
| | 110 VAC | |
| | 200 VAC | |
| | 220 VAC | |
| | 230 VAC | |
| | 240 VAC | |
| | 24 VAC | |
| | 48 VAC | |
| With light | 24 VDC | **GDM2A-G-Z5** |
| | 100 VAC | **GDM2A-R-L1** |
| | 110 VAC | **GDM2A-R-L1** |
| | 200 VAC | **GDM2A-R-L2** |
| | 220 VAC | **GDM2A-R-L2** |
| | 230 VAC | **GDM2A-R-L2** |
| | 240 VAC | **GDM2A-R-L2** |
| | 24 VAC | **GDM2A-R-L5** |
| | 48 VAC | **GDM2A-R-L5** |

### ● Gasket Part No. for DIN Connector

**VCW20-1-29-1 (For Class B)**
**VCW20-1-29-1-F (For Class H)**

### ● Lead Wire Assembly for Flat Terminal (Set of 2 pcs.)

**VX021S-1-16FB**

### ● Bracket Assembly Part No. (for Metal Body)

**VXZ 3 0S − 14A − 1**

| | |
|---|---|
| **3** | For VXZ2 3/4/A/B □ |
| **5** | For VXZ2 5/6/C/D □ |

∗ 2 mounting screws are shipped together with the bracket assembly.




Courtesy of Steven Engineering, Inc - (800) 258-9200 - sales@steveneng.com - www.stevenengineering.com

# *VXZ Series*
# Glossary of Terms

## Pressure Terminology

**1. Maximum operating pressure differential**

The maximum pressure differential (the difference between the inlet and outlet pressure) which is allowed for operation. When the outlet pressure is 0 MPa, this becomes the maximum operating pressure.

**2. Minimum operating pressure differential**

The minimum pressure differential (the difference between the inlet pressure and outlet pressure) required to keep the main valve fully opened.

**3. Maximum system pressure**

The maximum pressure that can be applied inside the pipelines (line pressure).

[The pressure differential of the solenoid valve portion must be less than the maximum operating pressure differential.]

**4. Withstand pressure**

The pressure in which the valve must be withstood without a drop in performance after holding for one minute under prescribed pressure and returning to the operating pressure range. [value under the prescribed conditions]

## Electrical Terminology

**1. Surge voltage**

A high voltage which is momentarily generated by shutting off the power in the shut-off area.

**2. Degree of protection**

A degree defined in the "JIS C 0920: Waterproof test of electric machinery/appliance and the degree of protection against the intrusion of solid foreign objects."

Verify the degree of protection for each product.

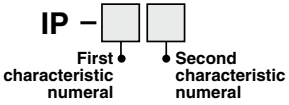


**●First Characteristics:**
**Degrees of protection against solid foreign objects**

| | |
|---|---|
| **0** | Non-protected |
| **1** | Protected against solid foreign objects of 50 mmø and greater |
| **2** | Protected against solid foreign objects of 12 mmø and greater |
| **3** | Protected against solid foreign objects of 2.5 mmø and greater |
| **4** | Protected against solid foreign objects of 1.0 mmø and greater |
| **5** | Dust-protected |
| **6** | Dust-tight |

## Electrical Terminology

**●Second Characteristics:**
**Degrees of protection against water**

| | | |
|---|---|---|
| **0** | Non-protected | — |
| **1** | Protected against vertically falling water drops | Dripproof type 1 |
| **2** | Protected against vertically falling water drops when enclosure tilted up to 15° | Dripproof type 2 |
| **3** | Protected against rainfall when enclosure tilted up to 60° | Rainproof type |
| **4** | Protected against splashing water | Splashproof type |
| **5** | Protected against water jets | Water-jet-proof type |
| **6** | Protected against powerful water jets | Powerful water-jet-proof type |
| **7** | Protected against the effects of temporary immersion in water | Immersible type |
| **8** | Protected against the effects of continuous immersion in water | Submersible type |

Example) IP65: Dust-tight, Water-jet-proof type

"Water-jet-proof type" means that no water intrudes inside an equipment that could hinder from operating normally by means of applying water for 3 minutes in the prescribed manner. Take appropriate protection measures, since a device is not usable in an environment where a droplet of water is splashed constantly.

## Others

**1. Material**

NBR: Nitrile rubber

FKM: Fluoro rubber

EPDM: Ethylene propylene rubber

**2. Oil-free treatment**

The degreasing and washing of wetted parts

**3. Symbol**

When the valve is closed, flow is blocked from port 1 to port 2. However, if the pressure in port 2 is higher than port 1, the valve will not be able to block the fluid and it will flow from port 2 to port 1.

## Flat Terminal

**1. Flat terminal/Electrical connection size of molded coil**

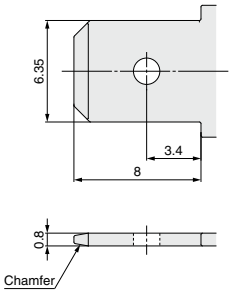




SMC
Courtesy of Steven Engineering, Inc - (800) 258-9200 - sales@steveneng.com - www.stevenengineering.com

# Solenoid Valve Flow Rate Characteristics
## (How to indicate flow rate characteristics)



### 1. Indication of flow rate characteristics

The flow rate characteristics in equipment such as a solenoid valve, etc. are indicated in their specifications as shown in Table (1).

**Table (1) Indication of Flow Rate Characteristics**

| Corresponding equipment | Indication by international standard | Other indications | Conformed standard |
|---|---|---|---|
| Pneumatic equipment | *C*, *b* | — | ISO 6358: 1989<br>JIS B 8390: 2000 |
| | — | *S* | JIS B 8390: 2000<br>Equipment: JIS B 8379, 8381-1, 8381-2 |
| | | *Cv* | ANSI/(NFPA)T3.21.3 R1-2008 |
| Process fluid control equipment | *Kv* | — | IEC60534-1: 2005<br>IEC60534-2-3: 1997<br>JIS B 2005-1: 2012<br>JIS B 2005-2-3: 2004<br>Equipment: JIS B 8471, 8472, 8473 |
| | — | *Cv* | |

### 2. Pneumatic equipment

**2.1 Indication according to the international standards**

(1) Conformed standard

**ISO 6358: 1989 : Pneumatic fluid power—Components using compressible fluids—Determination of flow rate characteristics**

**JIS B 8390: 2000 : Pneumatic fluid power—Components using compressible fluids—How to test flow rate characteristics**

(2) Definition of flow rate characteristics

The flow rate characteristics are indicated as a result of a comparison between sonic conductance ***C*** and critical pressure ratio ***b***.

Sonic conductance ***C*** : Value which divides the passing mass flow rate of an equipment in a choked flow condition by the product of the upstream absolute pressure and the density in a standard condition.

Critical pressure ratio ***b*** : Pressure ratio (downstream pressure/upstream pressure) which will turn to a choked flow when the value is smaller than this ratio.

Choked flow : The flow in which the upstream pressure is higher than the downstream pressure and where sonic speed in a certain part of an equipment is reached.
Gaseous mass flow rate is in proportion to the upstream pressure and not dependent on the downstream pressure.

Subsonic flow : Flow greater than the critical pressure ratio

Standard condition : Air in a temperature state of 20°C, absolute pressure 0.1 MPa (= 100 kPa = 1 bar), relative humidity 65%.
It is stipulated by adding the "(ANR)" after the unit depicting air volume.
(standard reference atmosphere)
Conformed standard: ISO 8778: 1990 Pneumatic fluid power—Standard reference atmosphere, JIS B 8393: 2000: Pneumatic fluid power—Standard reference atmosphere

(3) Formula for flow rate

It is described by the practical units as following.

When

$$\frac{P_2 + 0.1}{P_1 + 0.1} \leq b$$, **choked flow**

$$Q = 600 \times C\,(P_1 + 0.1)\sqrt{\frac{293}{273 + T}} \quad \cdots\cdots(1)$$

When

$$\frac{P_2 + 0.1}{P_1 + 0.1} > b$$, **subsonic flow**

$$Q = 600 \times C\,(P_1 + 0.1)\sqrt{1 - \left[\frac{\frac{P_2 + 0.1}{P_1 + 0.1} - b}{1 - b}\right]^2}\sqrt{\frac{293}{273 + T}} \quad \cdots\cdots(2)$$



Courtesy of Steven Engineering, Inc - (800) 258-9200 - sales@steveneng.com - www.stevenengineering.com

***Q*** : Air flow rate [L/min (ANR)]
***C*** : Sonic conductance [dm³/(s·bar)], dm³ (Cubic decimeter) of SI = L (liter).
***b*** : Critical pressure ratio [—]
***P₁*** : Upstream pressure [MPa]
***P₂*** : Downstream pressure [MPa]
***T*** : Temperature [°C]
Note) Formula of subsonic flow is the elliptic analogous curve.
Flow rate characteristics are shown in Graph (1) For details, please use the calculation software available from SMC website.

Example)
Obtain the air flow rate for $P_1$ = 0.4 [MPa], $P_2$ = 0.3 [MPa], $T$ = 20 [°C] when a solenoid valve is performed in $C$ = 2 [dm³/(s·bar)] and $b$ = 0.3.

According to formula 1, the maximum flow rate = $600 \times 2 \times (0.4 + 0.1) \times \sqrt{\frac{293}{273 + 20}} = 600$ [L/min (ANR)]

Pressure ratio = $\frac{0.3 + 0.1}{0.4 + 0.1} = 0.8$

Based on Graph (1), it is going to be 0.7 if it is read by the pressure ratio as 0.8 and the flow ratio to be $b$ = 0.3.
Hence, flow rate = Max. flow x flow ratio = 600 x 0.7 = 420 [L/min (ANR)]

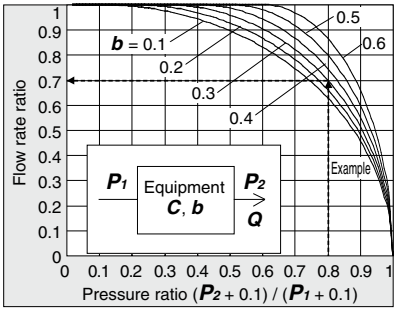


**Graph (1) Flow rate characteristics**

(4) Test method
Attach a test equipment with the test circuit shown in Fig. (1) while maintaining the upstream pressure to a certain level which does not go below 0.3 MPa. Next, measure the maximum flow to be saturated in the first place, then measure this flow rate at 80%, 60%, 40%, 20% and the upstream and downstream pressure. And then, obtain the sonic conductance $C$ from this maximum flow rate. In addition, calculate $b$ using each data of others and the subsonic flow formula, and then obtain the critical pressure ratio $b$ from that average.

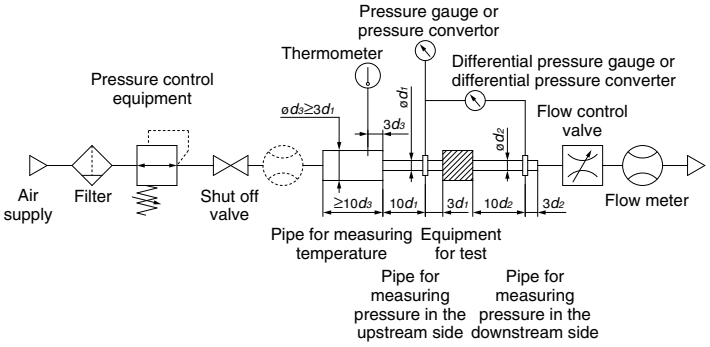


**Fig. (1) Test circuit based on ISO 6358: 1989, JIS B 8390: 2000**


SMC
Courtesy of Steven Engineering, Inc - (800) 258-9200 - sales@steveneng.com - www.stevenengineering.com

### 2.2 Effective area *S*

(1) Conformed standard

**JIS B 8390: 2000: Pneumatic fluid power—Components using compressible fluids—Determination of flow rate characteristics**

**Equipment standards:** **JIS B 8373: Solenoid valve for pneumatics**
**JIS B 8379: Silencer for pneumatics**
**JIS B 8381-1: Fittings for pneumatics—Part 1: Push-in fittings for thermoplastic resin tubing**
**JIS B 8381-2: Fittings for pneumatics—Part 2: Compression fittings for thermoplastic resin tubing**

(2) Definition of flow rate characteristics

Effective area ***S***: The cross-sectional area having an ideal throttle without friction deduced from the calculation of the pressure changes inside an air tank or without reduced flow when discharging the compressed air in a choked flow, from an equipment attached to the air tank. This is the same concept representing the "easy to run through" as sonic conductance ***C***.

(3) Formula for flow rate

When

$\frac{P_2 + 0.1}{P_1 + 0.1} \leq 0.5$, **choked flow**

$$Q = 120 \times S (P_1 + 0.1) \sqrt{\frac{293}{273 + T}} \quad \cdots\cdots(3)$$

When

$\frac{P_2 + 0.1}{P_1 + 0.1} > 0.5$, **subsonic flow**

$$Q = 240 \times S \sqrt{(P_2 + 0.1)(P_1 - P_2)} \sqrt{\frac{293}{273 + T}} \quad \cdots\cdots(4)$$

Conversion with sonic conductance ***C***:

$$S = 5.0 \times C \quad \cdots\cdots(5)$$

***Q*** : Air flow rate[L/min(ANR)]
***S*** : Effective area [mm²]
$P_1$ : Upstream pressure [MPa]
$P_2$ : Downstream pressure [MPa]
***T*** : Temperature [°C]

Note) Formula for subsonic flow (4) is only applicable when the critical pressure ratio ***b*** is the unknown equipment. In the formula (2) by the sonic conductance ***C***, it is the same formula as when ***b*** = 0.5.

(4) Test method

Attach a test equipment with the test circuit shown in Fig. (2) in order to discharge air into the atmosphere until the pressure inside the air tank goes down to 0.25 MPa (0.2 MPa) from an air tank filled with the compressed air at a certain pressure level (0.5 MPa) which does not go below 0.6 MPa. At this time, measure the discharging time and the residual pressure inside the air tank which had been left until it turned to be the normal values to determine the effective area ***S***, using the following formula. The volume of an air tank should be selected within the specified range by corresponding to the effective area of an equipment for test. In the case of JIS B 8379, the pressure values are in parentheses and the coefficient of the formula is 12.9.

$$S = 12.1 \frac{V}{t} \log_{10} \left(\frac{P_s + 0.1}{P + 0.1}\right) \sqrt{\frac{293}{T}} \quad \cdots\cdots(6)$$

***S*** : Effective area [mm²]
***V*** : Air tank capacity [L]
***t*** : Discharging time [s]
$P_s$ : Pressure inside air tank before discharging [MPa]
***P*** : Residual pressure inside air tank after discharging [MPa]
***T*** : Temperature inside air tank before discharging [K]

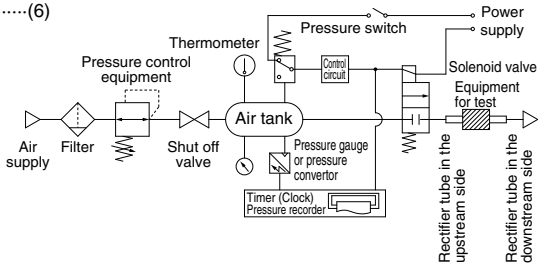


**Fig. (2) Test circuit based on JIS B 8390: 2000**



SMC
Courtesy of Steven Engineering, Inc - (800) 258-9200 - sales@steveneng.com - www.stevenengineering.com

**2.3 Flow coefficient *Cv* factor**

**The United States Standard ANSI/(NFPA)T3.21.3: R1-2008R: Pneumatic fluid power—Flow rating test procedure and reporting method for fixed orifice components**

This standard defines the ***Cv*** factor of the flow coefficient by the following formula that is based on the test conducted by the test circuit analogous to ISO 6358.

$$Cv = \frac{Q}{114.5\sqrt{\frac{\Delta P\,(P_2 + Pa)}{T_1}}} \quad \cdots\cdots(7)$$

$\Delta P$ : Pressure drop between the static pressure tapping ports [bar]
$P_1$ : Pressure of the upstream tapping port [bar gauge]
$P_2$ : Pressure of the downstream tapping port [bar gauge]: $P_2 = P_1 - \Delta P$
$Q$ : Flow rate [L/s standard condition]
$Pa$ : Atmospheric pressure [bar absolute]
$T_1$ : Upstream absolute temperature [K]
Test conditions are < $P_1 + Pa$ = 6.5 ± 0.2 bar absolute, $T_1$ = 297 ± 5K, 0.07 bar ≤ $\Delta P$ 0.14 bar.
This is the same concept as effective area $A$ which ISO 6358 stipulates as being applicable only when the pressure drop is smaller than the upstream pressure and the compression of air does not become a problem.

## 3. Process fluid control equipment

(1) Conformed standard

**IEC60534-1: 2005: Industrial-process control valves. Part 1: control valve terminology and general considerations**
**IEC60534-2-3: 1997: Industrial-process control valves. Part 2: Flow capacity, Section Three-Test procedures**
**JIS B 2005-1: 2012: Industrial-process control valves – Part 1: Control valve terminology and general considerations**
**JIS B 2005-2-3: 2004: Industrial-process control valves – Part 2: Flow capacity – Section 3: Test procedures**
**Equipment standards: JIS B 8471: Solenoid valve for water**
**JIS B 8472: Solenoid valve for steam**
**JIS B 8473: Solenoid valve for fuel oil**

(2) Definition of flow rate characteristics

***Kv*** factor: Value of the clean water flow rate represented by m³/h that runs through the valve (equipment for test) at 5 to 40°C, when the pressure difference is 1 x 105 Pa (1 bar). It is calculated using the following formula:

$$Kv = Q\sqrt{\frac{1 \times 10^5}{\Delta P} \cdot \frac{\rho}{1000}} \quad \cdots\cdots(8)$$

$Kv$: Flow coefficient [m³/h]
$Q$ : Flow rate [m³/h]
$\Delta P$ : Pressure difference [Pa]
$\rho$ : Density of fluid [kg/m³]

(3) Formula of flow rate

It is described by the practical units. Also, the flow rate characteristics are shown in Graph (2).
In the case of liquid:

$$Q = 53Kv\sqrt{\frac{\Delta P}{G}} \quad \cdots\cdots(9)$$

$Q$ : Flow rate [L/min]
$Kv$: Flow coefficient [m³/h]
$\Delta P$ : Pressure difference [MPa]
$G$ : Relative density [water = 1]
In the case of saturated aqueous vapor:

$$Q = 232Kv\sqrt{\Delta P(P_2 + 0.1)} \quad \cdots\cdots(10)$$

$Q$ : Flow rate [kg/h]
$Kv$: Flow coefficient [m³/h]
$\Delta P$ : Pressure difference [MPa]
$P_1$ : Upstream pressure [MPa]: $\Delta P = P_1 - P_2$
$P_2$ : Downstream pressure [MPa]


Courtesy of Steven Engineering, Inc - (800) 258-9200 - sales@steveneng.com - www.stevenengineering.com

Conversion of flow coefficient:

$Kv = 0.865\ Cv$ ·····(11)

Here,

***Cv*** factor: Value of the clean water flow rate represented by US gal/min that runs through the valve at 40 to 100°F, when the pressure difference is 1 lbf/in$^2$ (psi)

Value is different from ***Kv*** and ***Cv*** factors for pneumatic purpose due to different test method.

(4) Test method

Connect the equipment for the test to the test circuit shown in Fig. (3), and run water at 5 to 40°C. Then, measure the flow rate with a pressure difference where vaporization does not occur in a turbulent flow (pressure difference of 0.035 MPa to 0.075 MPa when the inlet pressure is within 0.15 MPa to 0.6 MPa). However, as the turbulent flow is definitely caused, the pressure difference needs to be set with a large enough difference so that the Reynolds number does not fall below 1 x 105, and the inlet pressure needs to be set slightly higher to prevent vaporization of the liquid. Substitute the measurement results in formula (8) to calculate ***Kv***.

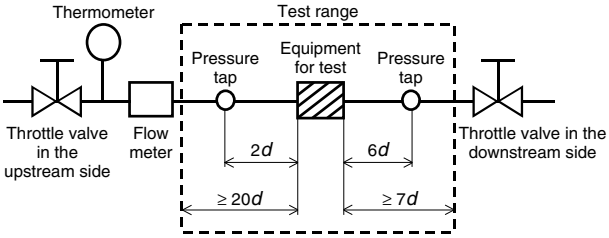


**Fig. (3) Test circuit based on IEC60534-2-3, JIS B 2005-2-3**

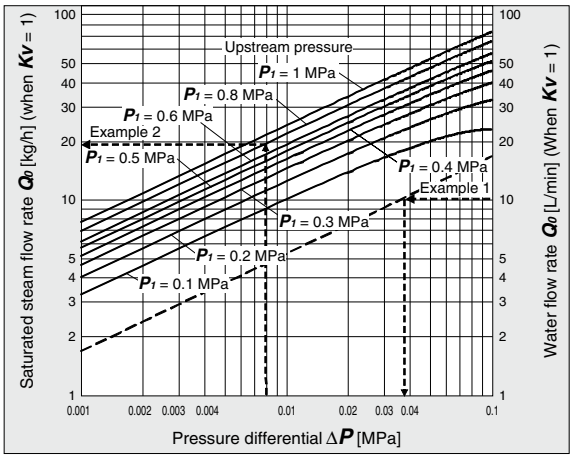


**Graph (2) Flow rate characteristics**

Example 1)

Obtain the pressure difference when water [15 L/min] runs through the solenoid valve with a ***Kv*** = 1.5 m$^3$/h. As the flow rate when ***Kv*** = 1 is calculated as the formula: $Q_0 = 15 \times 1/1.5 = 10$ [L/min], read off $\Delta P$ when $Q_0$ is 10 [L/min] in Graph (2). The reading is 0.036 [MPa].

Example 2)

Obtain the saturated steam flow rate when $P_1$ = 0.8 [MPa] and $\Delta P$ = 0.008 [MPa] with a solenoid valve with a ***Kv*** = 0.05 [m$^3$/h]. Read off $Q_0$ when $P_1$ is 0.8 and $\Delta P$ is 0.008 in Graph (2), the reading is 20 kg/h. Therefore, the flow rate is calculated as the formula: $Q = 0.05/1 \times 20 = 1$ [kg/h].



SMC
Courtesy of Steven Engineering, Inc - (800) 258-9200 - sales@steveneng.com - www.stevenengineering.com

# Flow Rate Characteristics

Note) Use this graph as a guide. In the case of obtaining an accurate flow rate, refer to pages 203 through to 207.

## For Air

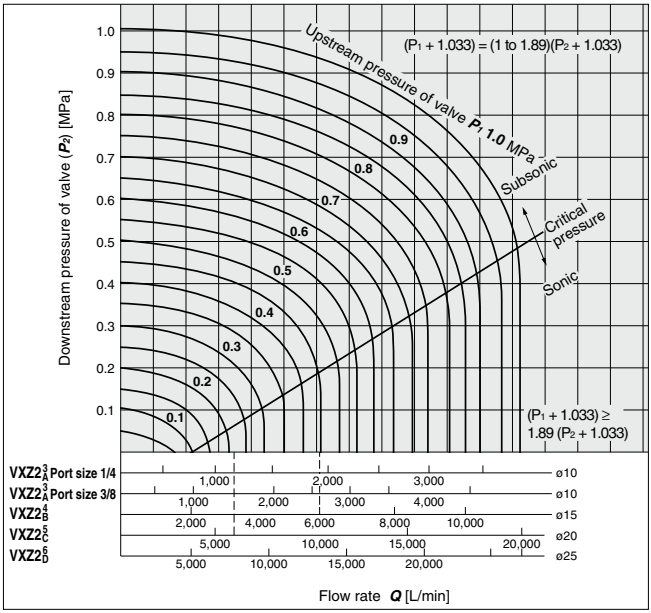


### How to read the graph

The sonic range pressure to generate a flow of 6,000 L/min (ANR) is $P_1 \approx 0.47$ MPa for a ø15 orifice (VXZ2$^{4}_{B}$) and $P_1 \approx 0.23$ MPa for a ø20 orifice (VXZ2$^{5}_{C}$).

The optimum size for an upstream pressure $P_1$ = 0.45 MPa and a flow of 6,000 L/min will be the VXZ2$^{4}_{B}$ (ø15 orifice, port size 1/2).

## For Water

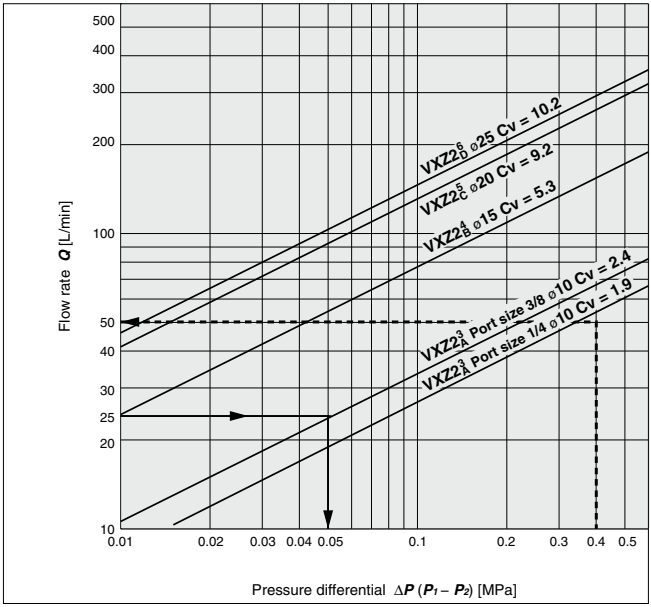


### How to read the graph

The pressure differential for a ø10 orifice to supply a flow of 25 L/min (VXZ2$^{3}_{A}$, port size 3/8) will be $\Delta P \approx 0.05$ MPa.

The optimum size for a pressure differential of $\Delta P \approx 0.4$ MPa and a flow of 50 L/min will be the VXZ2$^{3}_{A}$ (ø10 orifice, port size 1/4).



SMC
Courtesy of Steven Engineering, Inc - (800) 258-9200 - sales@steveneng.com - www.stevenengineering.com

# *VXZ Series*
# Specific Product Precautions 1

**Be sure to read this before handling the products. Refer to back page 50 for Safety Instructions and pages 17 to 19 for 2 Port Solenoid Valve for Fluid Control Precautions.**

## Design

## ⚠Warning

**1. Cannot be used as an emergency shutoff valve etc.**

The valves presented in this catalog are not designed for safety applications such as an emergency shutoff valve. If the valves are used in this type of system, other reliable safety assurance measures should also be adopted.

**2. Extended periods of continuous energization**

The solenoid coil will generate heat when continuously energized. Avoid using in a tightly shut container. Install it in a well ventilated area. Furthermore, do not touch it while it is being energized or right after it is energized.

**3. Liquid rings**

In cases with a flowing liquid, provide a bypass valve in the system to prevent the liquid from entering the liquid seal circuit.

**4. Actuator drive**

When an actuator, such as a cylinder, is to be driven using a valve, take appropriate measures to prevent potential danger caused by actuator operation.

**5. Pressure (including vacuum) holding**

It is not usable for an application such as holding the pressure (including vacuum) inside of a pressure vessel because air leakage is entailed in a valve.

**6. When the conduit type is used as equivalent to an IP65 enclosure, install a wiring conduit etc.**

**7. When an impact, such as water hammer etc., caused by the rapid pressure fluctuation is applied, the solenoid valve may be damaged. Give an attention to it.**

## Selection

## ⚠Warning

**1. Usage with low flow**

**Unstable flow may occur with the product under the following conditions: • low flow from the pump or compressor, etc. • use of several elbows or tees in the circuit, or • thin nozzles installed at the end of the piping etc. This can cause valve opening/closing failure, or oscillation, and cause a valve malfunction.**

**Please check the pressure differential and flow to select the appropriate size of the valve referring to the Flow rate Characteristics on page 208. Ensure that pressure differential does not become lower than 0.01 MPa during ON (N.C.: Valve open).**

## Selection

## ⚠Warning

**2. Fluid**

**1) Type of fluid**

Select an appropriate valve with reference to the table below for the general fluid. Before using a fluid, check whether it is compatible with the materials of each model by referring to the fluids listed in this catalog. Use a fluid with a kinematic viscosity of 50 $mm^2/s$ or less.

If there is something you do not know, please contact SMC.

**Applicable Fluid**

| | |
|---|---|
| For Air | Air |
| For Water | Air, Water |
| For Oil | Air, Water, Oil |
| For Heated water | Air(up to 99°C), Water, Heated water |
| For High temperature oil | Air(up to 99°C), Water, Oil, High temperature oil |

**2) Flammable oil, Gas**

Do not use the product with combustion-supporting or flammable fluids.

**3) Corrosive gas**

Cannot be used since it will lead to cracks by stress corrosion or result in other incidents.

**4)** When a brass body is used, then depending on water quality, corrosion and internal leakage may occur. If such abnormalities occur, exchange the product for a stainless steel body.

**5)** Use an oil-free specification when any oily particle must not enter the passage.

**6)** Applicable fluid on the list may not be used depending on the operating condition. Give adequate confirmation, and then determine a model, just because the compatibility list shows the general case.

**3. Air quality**

**<Air>**

**1) Use clean air.**

Do not use compressed air that contains chemicals, synthetic oils including organic solvents, salt or corrosive gases, etc., as it can cause damage or malfunction.

**2) Install an air filter.**

Install air filters close to valves at their upstream side. filtration degree of 5 μm or less should be selected.

**3) Install an aftercooler or air dryer, etc.**

Compressed air that contains excessive drainage may cause malfunction of valves and other pneumatic equipment. To prevent this, install an aftercooler or air dryer, etc.

**4) If excessive carbon powder is generated, eliminate it by installing mist separators at the upstream side of valves.**

If excessive carbon powder is generated by the compressor, it may adhere to the inside of the valves and cause a malfunction.

Refer to Best Pneumatics No.5 for further details on compressed air quality.





Courtesy of Steven Engineering, Inc - (800) 258-9200 - sales@steveneng.com - www.stevenengineering.com

# Specific Product Precautions 2

**Be sure to read this before handling the products. Refer to back page 50 for Safety Instructions and pages 17 to 19 for 2 Port Solenoid Valve for Fluid Control Precautions.**

## Selection

### ⚠Warning

**<Water>**

The use of a fluid that contains foreign objects can cause problems such as malfunction and seal failure by promoting wear of the valve seat and armature, and by sticking to the sliding parts of the armature etc. Install a suitable filter (strainer) immediately upstream from the valve. As a general rule, use 100 mesh.

The supply water includes materials that create a hard sediment or sludge such as calcium and magnesium. Since this scale and sludge can cause the valve to malfunction, install water softening equipment, and a filter (strainer) directly upstream from the valve to remove these substances.

**Tap water pressure:**

The water pressure for tap water is normally 0.4 MPa or less. However, in places like a high-rise building, the pressure may be 1.0 MPa. When selecting tap water, be careful of the maximum operating pressure differential.

When using water or heated water, poor operation or leaks may be caused by dezincification, erosion, corrosion, etc.

The brass (C37) body of this product uses dezincification resistant material as a standard. We also offer a stainless steel body type with improved corrosion resistance. Please use the one that fits your needs.

**<Oil>**

Generally, FKM is used as seal material, as it is resistant to oil. The resistance of the seal material may deteriorate depending on the type of oil, manufacturer or additives.

Check the resistance before using.

**<Vacuum>**

Please be aware that there is a range of pressure that can be used.

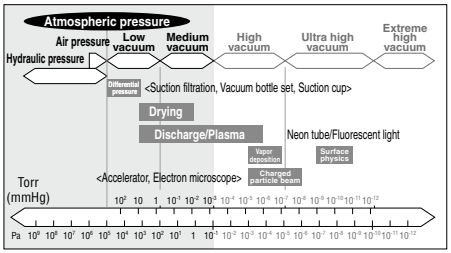


Vacuum piping direction: if the system uses a vacuum pump, we ask that you install the vacuum pump on the secondary side.

Also, install a filter on the primary side, and be careful that no foreign object is picked up.

Please replace the valve after operating the device approximately 300,000 times.

### ⚠Warning

**4. Ambient environment**

Use within the operable ambient temperature range. Check the compatibility between the product's composition materials and the ambient atmosphere. Be certain that the fluid used does not touch the external surface of the product.

**5. Countermeasures against static electricity**

Take measures to prevent static electricity since some fluids can cause static electricity.

### ⚠Caution

**1. Leakage voltage**

When the solenoid valve is operated using the controller, etc., the leakage voltage should be the product allowable leakage voltage or less. Particularly when using a resistor in parallel with a switching element and using a C-R element (surge voltage suppressor) to protect the switching element, take note that leakage current will flow through the resistor, C-R element, etc., creating a possible danger that the valve may not turn off.

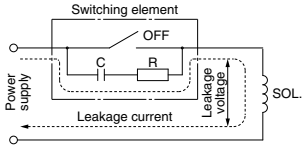


AC coil: 5% or less of rated voltage
DC coil: 2% or less of rated voltage

**2. Selecting model**

Material depends on fluid. Select optimal models for the fluid.

**3. When the fluid is oil.**

The kinematic viscosity must not exceed 50 $mm^2/s$.

## Mounting

### ⚠Warning

**1. If air leakage increases or equipment does not operate properly, stop operation.**

After mounting is completed, confirm that it has been done correctly by performing a suitable function test.

**2. Do not apply external force to the coil section.**

When tightening is performed, apply a wrench or other tool to the outside of the piping connection parts.

**3. Mount a valve with its coil position upward, not downward.**

When mounting a valve with its coil positioned downward, foreign objects in the fluid will adhere to the iron core leading to a malfunction.

**4. Do not warm the coil assembly with a heat insulator etc.**

Use tape, heaters, etc., for freeze prevention on the piping and body only. They can cause the coil to burn out.

**5. Secure with brackets, except in the case of steel piping and copper fittings.**



SMC

Courtesy of Steven Engineering, Inc - (800) 258-9200 - sales@steveneng.com - www.stevenengineering.com

# Specific Product Precautions 3

**Be sure to read this before handling the products. Refer to back page 50 for Safety Instructions and pages 17 to 19 for 2 Port Solenoid Valve for Fluid Control Precautions.**



## Mounting

### ⚠Warning

**6. Avoid sources of vibration, or adjust the arm from the body to the minimum length so that resonance will not occur.**

**7. Painting and coating**

Warnings or specifications printed or labeled on the product should not be erased, removed or covered up.

## Piping

### ⚠Warning

**1. During use, deterioration of the tube or damage to the fittings could cause tubes to come loose from their fittings and thrash about.**

To prevent uncontrolled tube movement, install protective covers or fasten tubes securely in place.

**2. For piping the tube, fix the product securely using the mounting holes so that the product is not in the air.**

### ⚠Caution

**1. Preparation before piping**

Before piping is connected, it should be thoroughly blown out with air (flushing) or washed to remove chips, cutting oil and other debris from inside the pipe. Avoid pulling, compressing, or bending the valve body when piping.

**2. Avoid connecting ground lines to piping, as this may cause electric corrosion of the system.**

**3. Always tighten threads with the proper tightening torque.**

When attaching fittings to valves, tighten with the proper tightening torque shown below.

Lower tightening torque will lead into fluid leakage.

**Tightening Torque for Piping**

| Connection threads | Proper tightening torque N·m |
|---|---|
| Rc1/8 | 7 to 9 |
| Rc1/4 | 12 to 14 |
| Rc3/8 | 22 to 24 |
| Rc1/2 | 28 to 32 |
| Rc3/4 | |
| Rc1 | 36 to 38 |

**4. Connection of piping to products**

When connecting piping to a product, avoid mistakes regarding the supply port etc.

**5. Winding of sealant tape**

When connecting pipes, fittings, etc., be sure that chips from the pipe threads and sealing material do not enter the valve.

Furthermore, when sealant tape is used, leave 1.5 to 2 thread ridges exposed at the end of the threads.

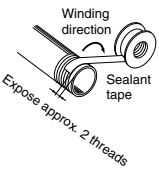


## Piping

### ⚠Caution

**6. If a regulator and valve are connected directly, they may vibrate together and cause chattering. Do not connect directly.**

**7. If the cross-sectional area of piping for the fluid supply side is restricted, operation will become unstable due to inadequate pressure differential during valve operation. Use piping size for the fluid supply side that is suited to the port size.**

## Recommended Piping Conditions

**1. When connecting tubes using One-touch fittings, provide some spare tube length shown in Fig. 1, recommended piping configuration.**

Also, do not apply external force to the fittings when binding tubes with bands etc. (see Fig. 2.)

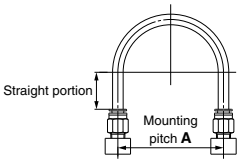


**Fig. 1 Recommended piping configuration**

Unit: mm

| Tubing size | Mounting pitch **A** | | | Straight portion length |
|---|---|---|---|---|
| | Nylon tubing | Soft nylon tubing | Polyurethane tubing | |
| ø1/8" | 44 or more | 29 or more | 25 or more | 16 or more |
| ø6 | 84 or more | 39 or more | 39 or more | 30 or more |
| ø1/4" | 89 or more | 56 or more | 57 or more | 32 or more |
| ø8 | 112 or more | 58 or more | 52 or more | 40 or more |
| ø10 | 140 or more | 70 or more | 69 or more | 50 or more |
| ø12 | 168 or more | 82 or more | 88 or more | 60 or more |

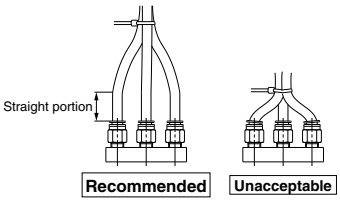


**Fig. 2 Binding tubes with bands**



Courtesy of Steven Engineering, Inc - (800) 258-9200 - sales@steveneng.com - www.stevenengineering.com

# *VXZ Series*
# Specific Product Precautions 4

**Be sure to read this before handling the products. Refer to back page 50 for Safety Instructions and pages 17 to 19 for 2 Port Solenoid Valve for Fluid Control Precautions.**

## Wiring

### ⚠Warning

**1. Do not apply AC voltage to Class "H" coil AC type unless it is built in full-wave rectifier, or the coil will be damaged.**

### ⚠Caution

**1. As a rule, use electrical wire with a cross sectional area of 0.5 to 1.25 mm$^2$ for wiring.**
**Furthermore, do not allow excessive force to be applied to the lines.**

**2. Use electrical circuits which do not generate chattering in their contacts.**

**3. Use voltage which is within ±10% of the rated voltage. In cases with a DC power supply where importance is placed on responsiveness, stay within ±5% of the rated value. The voltage drop is the value in the lead wire section connecting the coil.**

**4. When a surge from the solenoid affects the electrical circuitry, install a surge voltage suppressor etc., in parallel with the solenoid. Or, adopt an option that comes with the surge voltage protection circuit. (However, a surge voltage occurs even if the surge voltage protection circuit is used. For details, please consult with SMC.)**

## Operating Environment

### ⚠Warning

**1. Do not use in an atmosphere having corrosive gases, chemicals, sea water, water, water steam, or where there is direct contact with any of these.**

**2. Do not use in explosive atmospheres.**

**3. Do not use in locations subject to vibration or impact.**

**4. Do not use in locations where radiated heat will be received from nearby heat sources.**

**5. Employ suitable protective measures in locations where there is contact with water droplets, oil or welding spatter, etc.**

## Maintenance

### ⚠Warning

**1. Removing the product**

The valve will reach a high temperature when used with high temperature fluids. Confirm that the valve temperature has dropped sufficiently before performing work. If touched inadvertently, there is a danger of being burned.

1) Shut off the fluid supply and release the fluid pressure in the system.
2) Shut off the power supply.
3) Dismount the product.

**2. Low frequency operation**

Switch valves at least once every 30 days to prevent malfunction. Also, in order to use it under the optimum state, conduct a regular inspection once a half year.

### ⚠Caution

**1. Filters and strainers**

1) Be careful regarding clogging of filters and strainers.
2) Replace filter elements after one year of use, or earlier if the pressure drop reaches 0.1 MPa.
3) Clean strainers when the pressure drop reaches 0.1 MPa.

**2. Lubrication**

When using after lubricating, never forget to lubricate continuously.

**3. Storage**

In case of long term storage after use, thoroughly remove all moisture to prevent rust and deterioration of rubber materials etc.

**4. Exhaust the drain from an air filter periodically.**

## Operating Precautions

### ⚠Warning

**1. If there is a possibility of reverse pressure being applied to the valve, take countermeasures such as mounting a check valve on the downstream side of the valve.**

**2. When problems are caused by a water hammer, install water hammer relief equipment (accumulator etc.), or use an SMC water hammer relief valve (VXR series). Please consult with SMC for details.**

**3. For pilot type 2-port solenoid valves, when the valve is closed, sudden pressure resulting from the startup of the fluid supply source (pump, compressor, etc.) may cause the valve momentarily to open and leakage to occur, so please exercise caution.**

**4. If the product is used in the conditions in which rapid decrease in the inlet pressure of the valve and rapid increase in the outlet pressure of the valve are repeated, excessive stress will be applied to the diaphragm, which causes the diaphragm to be damaged and dropped, leading to the operation failure of the valve. Check the operating conditions before use.**


Courtesy of Steven Engineering, Inc - (800) 258-9200 - sales@steveneng.com - www.stevenengineering.com

# Specific Product Precautions 5

**Be sure to read this before handling the products. Refer to back page 50 for Safety Instructions and pages 17 to 19 for 2 Port Solenoid Valve for Fluid Control Precautions.**

## Electrical Connections

### ⚠Caution

**■ Grommet**

Class B coil: AWG20 Insulator O.D. 2.6 mm
Class H coil: AWG18 Insulator O.D. 2.1 mm

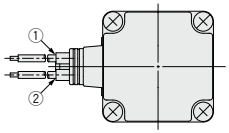


| Rated voltage | Lead wire color | |
|---|---|---|
| | ① | ② |
| DC | Black | Red |
| 100 VAC | Blue | Blue |
| 200 VAC | Red | Red |
| Other AC | Gray | Gray |

∗ There is no polarity.

**■ DIN terminal**

**Disassembly**

1. After loosening the binding head screw with flange, then if the housing is pulled in the direction of the arrow, the connector will be removed from the solenoid valve.
2. Pull out the binding head screw with flange from the housing.
3. There is a cutout on the bottom of the terminal block. Insert a small flat head screwdriver, etc. into this cutout, and remove the terminal block from the housing. (See figure below.)
4. Remove the ground nut, and pull out the washer and the rubber seal.

**Wiring**

1. Pass the cable through the ground nut, washer and rubber seal in this order, and insert these parts into the housing.
2. Loosen the binding head screw of the terminal block, then insert the core wire or the crimped terminal of the lead wire into the terminal, and securely fix it with the binding head screw. The binding head screw of the terminal block is M3.
   Note 1) Tighten the screw to a torque of between 0.5 and 0.6 N·m.
   Note 2) Cable O.D.: ø6 to ø12 mm
   Note 3) For an outside cable diameter of ø9 to 12 mm, remove the internal parts of the rubber seal before using.

**Assembly**

1. Pass the cable through the ground nut, washer, rubber seal and the housing in this order, and connect to the terminal block. Then, set the terminal block inside the housing. (Push in the terminal block until it snaps into position.)
2. Insert the rubber seal and the washer in this order into the cable entry of the housing, and then tighten the ground nut securely.
3. Insert the gasket between the bottom part of the terminal block and the plug attached to the equipment, and then insert the binding head screw with flange from the top of the housing, and tighten it.
   Note 1) Tighten the screw to a torque of between 0.5 and 0.6 N·m.
   Note 2) The orientation of the connector can be changed in steps of 90° by changing the method of assembling the housing and the terminal block.

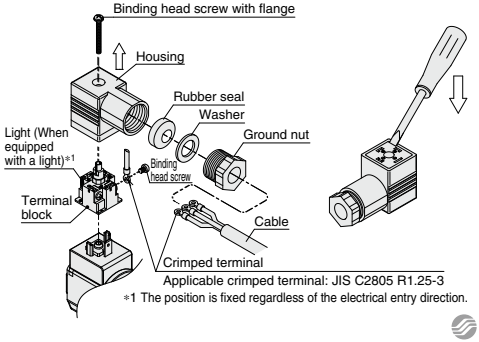


### ⚠Caution

Internal connections are as shown below.
Make connections to the power supply accordingly.

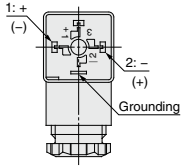


| Terminal no. | 1 | 2 |
|---|---|---|
| DIN terminal | + (–) | – (+) |

∗ There is no polarity.

**■ Conduit terminal**

**Disassembly**

1. Loosen the mounting screw, and remove the terminal cover from the conduit terminal.

**Wiring**

1. Insert the cable into the conduit terminal.
2. Loosen the screw with UP terminal of the conduit terminal, then insert the core wire or the crimped terminal of the lead wire into the terminal, and securely fix it with the screw with UP terminal.
   Note 1) Tighten the screw to a torque of between 0.5 and 0.6 N·m.

**Assembly**

1. Insert the gasket into the conduit terminal, and then clamp the terminal cover with the mounting screw.
   Note 1) Tighten the screw to a torque of between 0.5 and 0.6 N·m.
   Note 2) When changing the orientation of the conduit terminal, carry out the following procedure.
   1. Apply a tool (monkey wrench, spanner, etc.) to the width across flats of the conduit terminal, and turn the terminal in the counterclockwise direction.
   2. Loosen the lock nut.
   3. Turn the conduit terminal in the clamping direction (clockwise direction) to about 15° ahead of the desired position.
   4. Turn the lock nut by hand to the coil side until it is lightly tightened.
   5. Apply a tool to the width across flats of the conduit terminal, and turn it to the desired position (through an angle of about 15°) so as to clamp the conduit terminal.

   Note) When changing the orientation by applying additional tightening force to the conduit terminal from the factory-set position, turn no more than one half a turn.

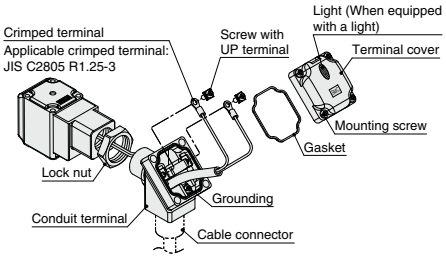






Courtesy of Steven Engineering, Inc - (800) 258-9200 - sales@steveneng.com - www.stevenengineering.com

# Specific Product Precautions 6

**Be sure to read this before handling the products. Refer to back page 50 for Safety Instructions and pages 17 to 19 for 2 Port Solenoid Valve for Fluid Control Precautions.**

## Electrical Connections

### ⚠Caution

**■ Conduit terminal**

Make connections according to the marks shown below.

- Use the tightening torques below for each section.
- Properly seal the terminal connection (G1/2) with the special wiring conduit etc.

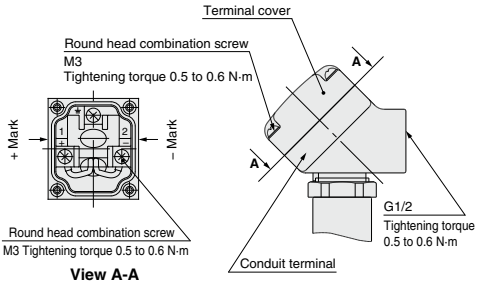


**View A-A**

(Internal connection diagram)

**■ Conduit**

When used as an IP65 equivalent, use seal to install the wiring conduit. Also, use the tightening torque below for the conduit.

Class B coil: AWG20 Insulator O.D. 2.5 mm

Class H coil: AWG18 Insulator O.D. 2.1 mm

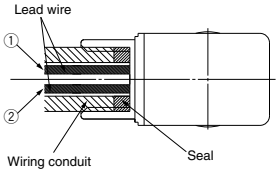


(Bore size G1/2 Tightening torque 0.5 to 0.6 N·m)

| Rated voltage | Lead wire color | |
|---|---|---|
| | ① | ② |
| DC | Black | Red |
| 100 VAC | Blue | Blue |
| 200 VAC | Red | Red |
| Other AC | Gray | Gray |

∗ There is no polarity.

| Description | Part no. |
|---|---|
| Seal | VCW20-15-6 |

Note) Please order separately.

## Electrical Circuits

### ⚠Caution

**[DC circuit]**

**Grommet, Flat terminal**

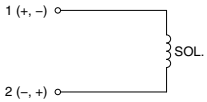


Without electrical option

**Grommet, DIN terminal, Conduit terminal, Conduit**

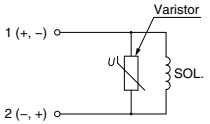


With surge voltage suppressor

**DIN terminal, Conduit terminal**

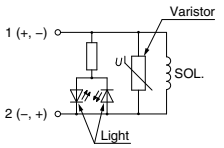


With light/surge voltage suppressor

**[AC circuit]**

**Grommet, DIN terminal, Conduit terminal, Conduit**

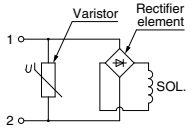


Without electrical option

**DIN terminal, Conduit terminal**

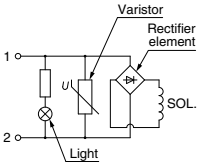


With light/surge voltage suppressor

## One-touch Fitting

### ⚠Caution

**For information on handling One-touch fittings and on appropriate tubing, refer to page 211 and the Fittings & Tubing section of the "Handling Precautions for SMC Products" on the SMC website.**



SMC

Courtesy of Steven Engineering, Inc - (800) 258-9200 - sales@steveneng.com - www.stevenengineering.com