Contact our sales office for delivery dates and prices as this is a special model.

Specialized Product **P.G.** Point to Group information

Filter Regulator

Improved durability in outdoor environments

AW30/40/60-□□-2□-B-X2709

Features

All external parts are made of metal.

Handle, Lock button, Screw, Plug: Stainless steel

The use of stainless steel improves the durability of the operation section.

Waterproof cover

Prevents entry of rainwater

Waterproof cover

∗ This product does not provide any corrosion resistance (anti-rust or anti-discoloration). The product delivery specifications need to be exchanged with SMC due to the wide range of possible outdoor operating conditions.

Combined cycle test (JIS H 8502:1999) **Passed 960 hours**

Salt water spray: 2 hours (Ambient temperature 35°C, salinity 5%) → **Drying: 4 hours** (Ambient temperature 60°C, relative humidity 20 to 30%) → **Wetting: 2 hours** (Ambient temperature 50°C, relative humidity 95% or more)

Specifications

(The flow rate characteristics are the same as the standard product. Refer to the **Web Catalog**.)

Model	AW30	AW40	AW40-06	AW60
Port size	1/4, 3/8	1/4, 3/8, 1/2	3/4	3/4, 1
Pressure gauge port size	1/8			
Fluid	Air			
Proof pressure	1.5 MPa			
Max. operating pressure	1.0 MPa			
Set pressure range	0.05 to 0.85 MPa			
Ambient and fluid temperatures	–5 to 60°C (No freezing)			
Nominal filtration rating	5 µm			
Bowl material	Aluminum die-cast			

⚠ Caution To ensure the safest possible operation of this product, please be sure to thoroughly read the **"Safety Instructions"** in our "Best Pneumatics" catalog before use.

SMC Corporation 4-14-1, SOTO-KANDA, CHIYODA-KU, TOKYO 101-0021, JAPAN **URL: http://www.smcworld.com**

©2018 SMC Corporation All Rights Reserved

SP163X-006E
P: WQ

Courtesy of Steven Engineering, Inc - (800) 258-9200 - sales@steveneng.com - www.stevenengineering.com

How to Order (Option/Semi-standard symbol: When more than one specification is required, indicate in alphanumeric order.)

AW 30 - 02 B - 2 R - B - X2709

Body size

30	Body size 30
40	Body size 40
60	Body size 60

Port size

Symbol	Port size	Body size		
		30	**40**	**60**
02	Rc1/4	●	●	—
03	Rc3/8	●	●	—
04	Rc1/2	—	●	—
06	Rc3/4	—	●	●
10	Rc1	—	—	●

Mounting option∗1

Nil	Without mounting option
B∗2	With bracket
H∗3	With set nut (for panel mount)

Bowl

2	Metal bowl

Flow direction

Nil	Flow direction: Left to right
R	Flow direction: Right to left

∗1 Options B and H are not assembled and supplied loose at the time of shipment.
The waterproof cover is also supplied loose at the time of shipment. After assembling B or H, be sure to assemble the waterproof cover so that it faces downward (towards the ground) as shown in the photo on the right.
After tightening the waterproof cover by hand, retighten it approx. 1/2 turn with a tightening tool. The reference tightening torque is 1 to 1.5 N·m.
∗2 The bracket comes with set nuts (applicable to the AW30 to AW40). The AW60 includes 2 mounting screws.
∗3 Only for the AW30 and AW40. Panel mounting is not available for the AW60.
∗ Pressure gauge is not available as an option. (When a pressure gauge is required, please contact SMC separately.)

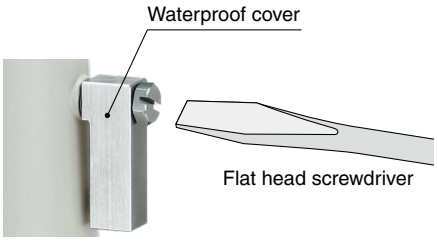

Construction

AW30/40-B-X2709

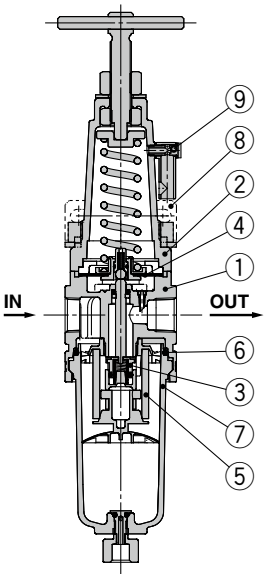

AW60-B-X2709

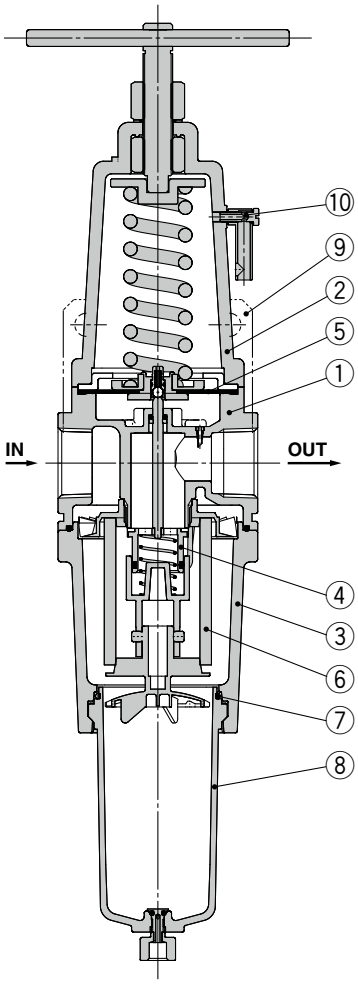

No.		Description	Material	Color
AW30 AW40	**AW60**			
1	**1**	**Body**	Aluminum die-cast	White
2	**2**	**Bonnet**	Aluminum die-cast	White
—	**3**	**Housing**	Aluminum die-cast	White
3	**4**	**Valve assembly**	Brass, HNBR	—
4	**5**	**Diaphragm assembly**	Weatherable NBR	—
5	**6**	**Filter element**	Non-woven fabric	—
6	**7**	**Bowl seal**	NBR	—
7	**8**	**Bowl assembly**	Aluminum die-cast	White
8	**9**	**Bracket assembly**	Stainless steel	—
9	**10**	**Waterproof cover**	Stainless steel	—

Courtesy of Steven Engineering, Inc - (800) 258-9200 - sales@steveneng.com - www.stevenengineering.com

Dimensions

AW30/40-B-X2709

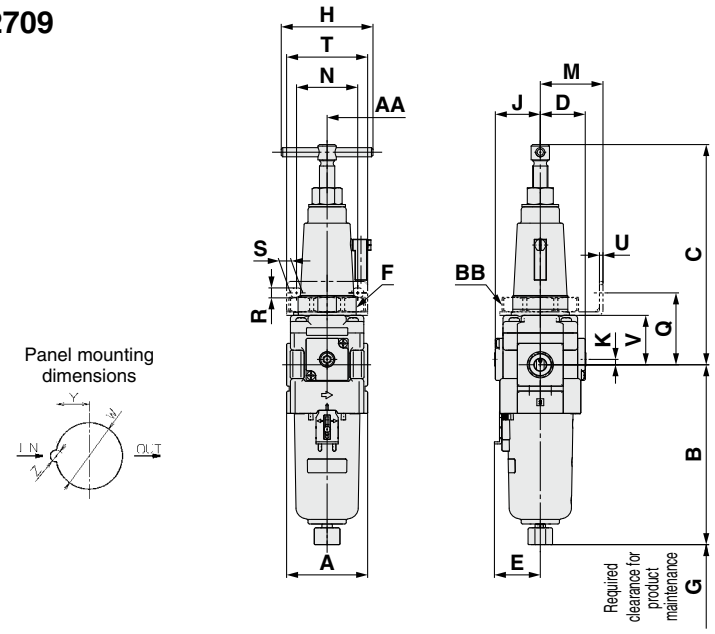

[mm]

Model	A	B	C	D	E	F	G	H	J	K	M	N	Q	R	S	T	U	V
AW30-B-X2709	53	117.6	144	29.4	30	M38 x 1.5	55	60	29.4	3.5	41	40	47	6.5	8	53	2.3	32.3
AW40-B-X2709	70	149.6	162	37.3	38.4	M42 x 1.5	80	60	37.3	1.5	50	54	59.2	8.5	10.5	70	2.3	40.7
AW40-06-B-X2709	75	151.6	164	37.3	38.4	M42 x 1.5	80	60	37.3	1.2	50	54	60.7	8.5	10.5	70	2.3	42.2

Model	W	Y	Z	AA	BB
AW30-B-X2709	38.5	19	7	28.8	Width across flats 50
AW40-B-X2709	42.5	21	7	31.8	Width across flats 55
AW40-06-B-X2709	42.5	21	7	31.8	Width across flats 55

AW60-B-X2709

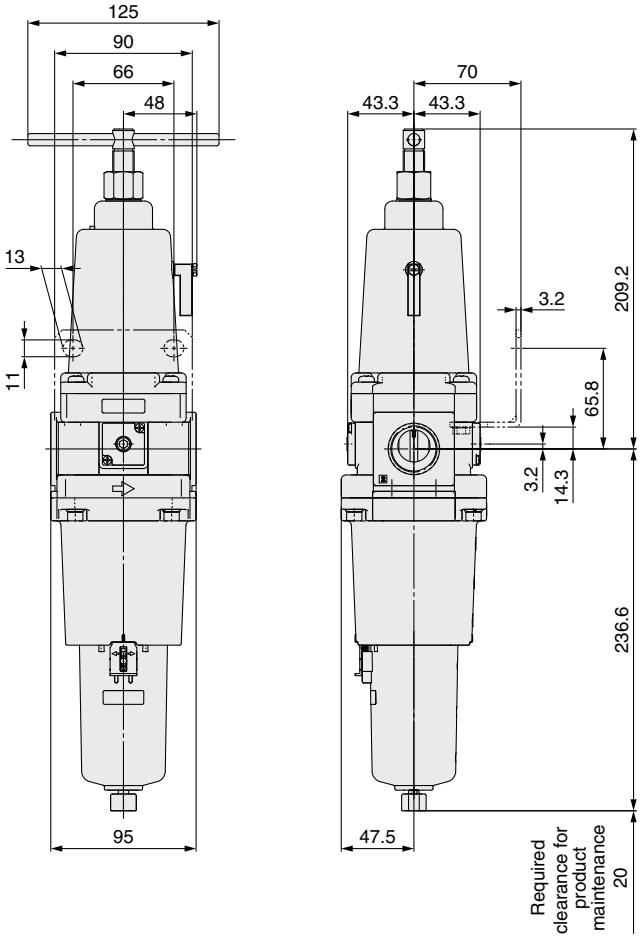

Courtesy of Steven Engineering, Inc - (800) 258-9200 - sales@steveneng.com - www.stevenengineering.com