Section 16

NEMA and Definite Purpose Contactors and Starters

Manual Starters and Switches

Definite Purpose Contactors and Starters

NEMA Style Type S Contactors and Starters

Lighting Contactors

Pump Panel

Combination Starters

NEMA Style TeSys N Contactors and Starters

Selection Information	16-2
Manual Starters and Switches	16-4
TeSys™ U Motor Starters	16-12
TeSys™ N Contactors and Starters	16-13
Type S Full Voltage Contactors and Starters	16-28
Vacuum Contactors and Starters, Full Voltage	16-43
Type S Combination Starters	16-46
Type S Reversing Full Voltage Contactors and Starters	16-60
Reversing Vacuum Contactors, Full Voltage	16-66
Type S Reversing Combination Starters	16-67
Lighting Contactors	16-74
Definite Purpose Contactors	16-89
Definite Purpose Starters	16-92
Well-Guard Control™ Pump Panels	16-93
Duplex AC Motor Controllers	16-96
Reversing Definite Purpose Contactors	16-99
Overload Relays	16-100
Separate Enclosures	16-110
Factory Modifications (Forms)	16-117
Magnetic Coils	16-122
Replacement Parts Kits	16-124
Accessories	16-126
Thermal Units	16-132

© 2019 Schneider Electric
All Rights Reserved

Courtesy of Steven Engineering, Inc - (800) 258-9200 - sales@steveneng.com - www.stevenengineering.com

Selection Information

Class	2510, 2511, 2512	T02, T36	8502 & 8702	8536 & 8736	8538 & 8738
		NEMA Style, Full Voltage Non-Reversing and Full Voltage Reversing			
Type of Product	Manual Starters and Switches, Non-Reversing, Reversing and Two Speed	TeSys™ N Contactors and Starters	AC Magnetic Contactors	AC Magnetic Starters	Combination Magnetic Starters with Disconnect Switch
Page	page 16-4	page 16-14	8502: page 16-29 8702: page 16-60	8536: page 16-33 8736: page 16-62	8538: page 16-47 8738: page 16-67
NEMA Sizes	M-0 M-1 M-1P	00–7	00–7	00–7	8538: 0– 6 8738: 0–5
Load Voltage	Type F: 277 Vac Types K & M: 600 Vac	600 Vac Max.	600 Vac Max.	600 Vac Max.	600 Vac Max.
Current Ratings (Continuous)	Type F: 16 A Types K & M: 30 A	9–810 A	9–810 A	9–810 A	8538: 18–540 A 8738: 18–270 A
Horsepower Ratings (Maximum)	Type F: 1 Type K: 20 Type M: 10	600	0.5–600	0.5–600	8538: 0.5–400 8738: 0.5–200
Overload Relay	Type F: Melting Alloy Type K: N/A Type M: Melting Alloy	Contactors: N/A Starters: Bimetallic (Size 00-2) or Solid-State	N/A	Melting Alloy Bimetallic (Size 00–2) Solid State	Melting Alloy Bimetallic (Size 0–2) Solid State
Enclosure Types	1, Flush Mount, 3R, 4, 4X, 7 & 9 and Open	Open	1, 3R, 4, 4X, 12/3R, 7 & 9 and Open	1, 3R, 4, 4X, 12/3R, 7 & 9 and Open	1, 4, 4X, 12/3R
Approvals	UL File E42243 NLRV UR File E42243 NLRV2 CSA File LR 25490	Contactors: UL File E164862 NLDX CSA LR43364 Class 3211-24 Starters: UL File E152395 NKJH CSA LR60905 Class 3211-24	UL File E78351 NLDX CSA 60905 Class 3211-04	UL File E78351 NLDX CSA 60905 Class 3211-04	UL File E152395 NKJH7 CSA LR584 Class 3211 04

© 2019 Schneider Electric
All Rights Reserved
11/20/2019

Courtesy of Steven Engineering, Inc - (800) 258-9200 - sales@steveneng.com - www.stevenengineering.com

Selection Information

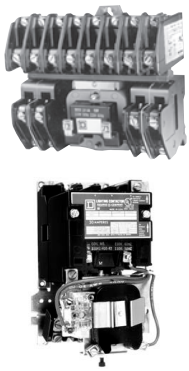

Class	8539 & 8739	8903L & 8903S	8903 Combination Devices	8910, 8911, 8965	8940	8941
Type of Product	Combination Magnetic Starters with PowerPact™ Circuit Breaker	Multipole electrically held and mechanically held contactors available in 30 A configurations to 12 poles and 800 A configurations to 3 poles.	Type S lighting contactors electrically held and mechanically held available with disconnect switches or PowerPact™ circuit breakers	Definite Purpose non-reversing contactors available as compact 1 or 2 pole to 40 A and 2 to 4 pole to 90 A. Reversing and Starter Configurations also available.	Well-Guard Control™ Pumping Plant Panels available with disconnect switches or PowerPact™ circuit breakers.	NEMA Style AC Duplex Motor Controllers available as a combination starter or without disconnecting means.
Page	8539: page 16-51 8739: page 16-69	page 16-74	page 16-77	8910: page 16-89 8911: page 16-92 8965: page 16-99	page 16-93 page 16-94	page 16-96
NEMA Sizes	8539: 0–7 8739: 0–6	N/A	N/A	N/A	1–7	1–4
Load Voltage	600 Vac Max.	600 Vac Max.	600 Vac Max.	600 Vac Max.	600 Vac Max.	600 Vac Max.
Current Ratings (Continuous)	8539: 18–810 A 8739: 18–540 A	8903L to 30 A 8903S to 800 A	300 A (Disconnect) 600 A (Circuit Breaker)	20–40 A (Compact) 20–90 A	27–810 A	27–135 A
Horsepower Ratings (Maximum)	8539: 0.5–600 8739: 0.5–400	N/A	N/A	0.5–50	0.5–600	0.5–100
Overload Relay	Melting Alloy Bimetallic (Size 0–1) Solid State	N/A	N/A	Melting Alloy (8911)	Melting Alloy Bimetallic Solid State	Melting Alloy Bimetallic Solid State
Enclosure Types	1, 4, 4X, 12/3R	1, 3R, 4, 4X, 12/3R and Open	1, 4, 4X, 12/3R	1	3R	1, 4, 4X, 12/3R and Open
Approvals	UL File E152395 NKJH7 CSA LR584 Class 3211 04	UL File E78427 NRNT CSA LR60905 Class 3231 01	UL File E16151 NRNT cUL File E16151 NRNT	UL E3190 NLDX2 CSA LR25490 Class 3211 04	UL/cUL 152395 NKJH	UL File E152395 NKJH7

© 2019 Schneider Electric
All Rights Reserved
11/20/2019

Courtesy of Steven Engineering, Inc - (800) 258-9200 - sales@steveneng.com - www.stevenengineering.com

Fractional Horsepower Manual Starters with Melting Alloy Type Thermal Overload Relay

Table 16.1: Single-Unit Types—Class 2510—Rated 16 A—Thermal Units (see Thermal Unit Selection, page 16-132)

Type of Operator	No. of Poles	Features	NEMA 1 General Purpose Enclosure Surface Mounting		General Purpose Flush Mounting (Without Pull Box)			NEMA Type 4 [1] Enclosure Watertight and Dusttight	NEMA Types 3R, 7 & 9 Enclosure Hazardous Locations Div. 1 & 2 Class I Groups B, C, & D, & Class II Groups E, F, & G	Open Type	Number of Thermal Units Required
			Standard	Oversized	Gray Flush Plate	Standard Stainless Steel Flush Plate	Jumbo Stainless Steel Flush Plate				
			Type	Type	Type	Type	Type	Type	Type	Type	
Basic Starter—Class 2510											
Toggle	1	Standard	FG1	FGJ1	FF1	FS1	—	—	—	FO1	1
		With Red Pilot Light [2]	FG1P	FGJ1P	FF1P	FS1P	FSJ1P	—	—	FO1P	1
	2	Standard	FG2	FGJ2	FF2	FS2	—	—	—	FO2	1
		With Red Pilot Light [2]	FG2P	FGJ2P	FF2P	FS2P	FSJ2P	—	—	FO2P	1
Key	1	Standard	FG3	FGJ3	FF3	FS3	—	—	—	FO3	1
		With Red Pilot Light [2]	FG3P	FGJ3P	FF3P	FS3P	FSJ3P	—	—	FO3P	1
	2	Standard	FG4	FGJ4	FF4	FS4	—	—	—	FO4	1
		With Red Pilot Light [2]	FG4P	FGJ4P	FF4P	FS4P	FSJ4P	—	—	FO4P	1
Starter with Handle Guard/Lock-Off—Class 2510											
Toggle	1	Standard	FG5	FGJ5	Order basic starter plus separate handle guard kit.			FW1	FR1	[3] [4]	1
		With Red Pilot Light [2]	FG5P	FGJ5P				FW1P	—	[3] [4]	1
	2	Standard	FG6	FGJ6				FW2	FR2	[3] [4]	1
		With Red Pilot Light [2]	FG6P	FGJ6P				FW2P	—	[3] [4]	1

Table 16.2: Duplex Units—Class 2510

Type of Operator	No. of Poles	Features	NEMA 1 General Purpose Enclosure Surface Mounting	General Purpose Flush Mounting (Without Pull Box)			Number of Thermal Units Required
				Gray Flush Plate for Wall or Cavity Mounting	Stainless Steel Flush Plate for Wall or Cavity Mounting	Replacement Starter Class 2510	
			Type	Type	Type	Type	
One Starter in Duplex Enclosure—Class 2510							
Toggle	2	Standard	FG02	—	—	—	1
		With Red Pilot Light [2]	FG02P	—	—	—	
Key	2	With Red Pilot Light [2]	FG04P	—	—	—	1
Two Starters in One Enclosure—Class 2510							
Toggle	2 Each Str.	Standard	FG22	FF22	—	—	2
		With Red Pilot Light on Each[2]	FG22P	FF22P	FS22P	—	
Key	2 Each Str.	With Red Pilot Light on Each[2]	FG44P	FF44P	FS44P	—	2
Starter and Auto-Off-Hand SPDT Selector Switch (AC Only)—Class 2510							
Toggle	1	Standard	FG71	FF71	—	—	1
		With Red Pilot Light [2]	FG71P	FF71P	FS71P	—	
	2	Standard	FG72	FF72	—	—	1
		With Red Pilot Light[2]	FG72P	FF72P	FS72P	—	
Key	2	With Red Pilot Light[2]	FG74P	FF74P	FS74P	—	1
Two Speed Starters (AC Only)—Class 2512						**Replacement Starter—Class 2510**	
Toggle	1	**With Mechanical Interlock:**					2
		Standard	FG11	FF11	—	FO1T	
		With 2 Red Pilot Lights [2]	FG11P	FF11P	—	FO1PT	
		With High-Off-Low Selector Switch:					
		With 2 Red Pilot Lights [2]	—	—	FS101P	FO1PT	
	2	**With Mechanical Interlock:**					2
		Standard	FG22	FF22	—	FO2T	
		With 2 Red Pilot Lights [2]	FG22P	FF22P	—	FO2PT	
		With High-Off-Low Selector Switch:					
		With 2 Red Pilot Lights [2]	—	—	FS202P	FO2PT	

Type FG2P

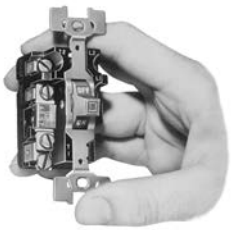

Type FO2

Table 16.3: Horsepower Ratings, Type F (continuous current rating: 16 A)

Volts	Maximum Horsepower		
	AC Single Phase		DC 2-Pole Only
	1-Pole	2-Pole	
115	1	1	3/4
230	1	2	3/4
277	1	1	—

Table 16.4: Approvals—2510 Type F and K

Agency	Enclosed		Open	
UL	UL Listed	File: E42243, CCN: NLRV	UL Component Recognized	File: E42243, CCN: NLRV2
CSA	CSA Certified File: LR25490, Class: 3211-05			

Table 16.5: How to Order

To Order Specify:	Catalog Number	
• Class Number	**Class**	**Type**
• Type Number	2510	FG1

[1] Furnished with one 3/4" pipe tap in the bottom (reversible for top feed). For a 3/4" pipe tap in the top and bottom, add the suffix **H** to the Type.
[2] For a green pilot light, add the letter **G** to the catalog number (i.e. 2510FG2**PG**).
[3] For a replacement starter, order the Open type above.
[4] When replacing a starter equipped with a pilot light in NEMA 4 enclosure, retain the pilot light mounting bracket from the original device.

© 2019 Schneider Electric
All Rights Reserved
11/20/2019

Courtesy of Steven Engineering, Inc - (800) 258-9200 - sales@steveneng.com - www.stevenengineering.com

Manual Switches, Type K

Table 16.6: Non-Reversing—Class 2510

Operator Style	No. of Poles	Features		NEMA 1 General Purpose Enclosure Surface Mounting		General Purpose Flush Mounting (Without Pull Box)			NEMA 4 Enclosure[5] Watertight and Dusttight	NEMA 3R, 7 & 9 Enclosures[5] Hazardous Locations Div. 1 & 2 Class I Groups B, C, & D, & Class II Groups E, F, and G	Open Style
				Standard	Oversized	Gray Flush Plate	Standard Stainless Steel Flush Plate	Jumbo Stainless Steel Flush Plate			
				Type	Type	Type	Type	Type	Type	Type	Type
Toggle	2	**Standard**		KG1	KGJ1	KF1	KS1	—	KW1	KR1	KO1
		With Pilot Light [6]	115 Vac	KG1A	KGJ1A	KF1A	KS1A	KSJ1A	KW1A	—	KO1A [7]
			230 Vac	KG1B	KGJ1B	KF1B	KS1B	KSJ1B	KW1B	—	KO1B [7]
	3	**Standard**		KG2	KGJ2	KF2	KS2	—	KW2	KR2	KO2
		With Pilot Light [6]	208–277 Vac	KG2B	KGJ2B	KF2B	KS2B	KSJ2B	KW2B	—	KO2B [7]
			440–600 Vac	KG2C	KGJ2C	KF2C	KS2C	KSJ2C	KW2C	—	KO2C [7]
	2	**Standard**		KG5	KGJ5	—	—	—	KW5	—	KO5
		With Pilot Light [6]	115 Vac	KG5A	—	—	—	—	KW5A	—	KO5A [7]
			230 Vac	KG5B	—	—	—	—	KW5B	—	KO5B [7]
	3	**Standard**		KG6	KGJ6	—	—	—	KW6	—	KO6
		With Pilot Light [6]	208–277 Vac	KG6B	—	—	—	—	KW6B	—	KO6B [7]
			440–600 Vac	KG6C	—	—	—	—	KW6C	—	KO6C [7]
Key	2	**Standard**		KG3	KGJ3	KF3	KS3	—	—	—	KO3
		With Pilot Light [6]	115 Vac	KG3A	KGJ3A	KF3A	KS3A	KSJ3A	—	—	KO3A
			230 Vac	KG3B	KGJ3B	KF3B	KS3B	KSJ3B	—	—	KO3B
	3	**Standard**		KG4	KGJ4	KF4	KS4	—	—	—	KO4
		With Pilot Light [6]	208–277 Vac	KG4B	KGJ4B	KF4B	KS4B	KSJ4B	—	—	KO4B
			440–600 Vac	KG4C	KGJ4C	KF4C	KS4C	KSJ4C	—	—	KO4C

Table 16.7: Reversing—Class 2511

Operator Style	No. of Poles	Suitable for Motor Types	Features (Including Mechanical Interlock)		NEMA 1 General Purpose Enclosure Surface Mounting	With Flush Plate for Cavity Mounting (Without Pull Box)	Replacement Switch Class 2510
					Type	Type	Type
Toggle	2	1 Ø 3-Lead Repulsion-Induction	**Standard**		KG11	KF11	KO1T
			With Pilot Light [6]	115 Vac	KG11A	KF11A	KO1AT
				230 Vac	KG11B	KF11B	KO1BT
	3	3 Ø; Also 1 Ø Capacitor, Split Ø, or 4-Lead Repulsion-Induction	**Standard**		KG22	KF22	KO2T
			With Pilot Light [6]	110–120 Vac	KG22A	KF22A	KO2AT
				208–220 Vac	KG22B	KF22B	KO2BT
				440–600 Vac	KG22C	KF22C	KO2CT

Table 16.8: Two Speed—Class 2512

Operator Style	No. of Poles	Suitable for Motor Types	Features (Including Mechanical Interlock)		NEMA 1 General Purpose Enclosure Surface Mounting	With Flush Plate for Cavity Mounting (Without Pull Box)	Replacement Switch Class 2510
					Type	Type	Type
Toggle	2	1 Ø Two Winding (3-Lead)	**Standard**		KG11	KF11	KO1T
			With 2 Pilot Lights [6]	115 Vac	KG11A	KF11A	KO1AT
				230 Vac	KG11B	KF11B	KO1BT
	3	3 Ø Separate Winding (Wye-Connected)	**Standard**		KG22	KF22	KO2T
			With 2 Pilot Lights [6]	208–240 Vac	KG22B	KF22B	KO2BT
				440–600 Vac	KG22C	KF22C	KO2CT

Table 16.9: Class 2511 and 2512 Horsepower Ratings Type K

Device	No. of Poles	Motor Type AC	Maximum Hp			Maximum DC Hp (breaking 2 poles)		
			115 V	230 V	460–575 V	90 V	115 V	230 V
Class 2511	2	1 Ø	2	2	3	1	2	1-1/2
	3	3Ø	2	7-1/2	10			
Class 2512	2	1 Ø	2	2	3			
	3	3 Ø, Constant or Variable Torque	2	7-1/2	10			
	3	3 Ø, Constant Hp	2	7-1/2	10			
Continuous current rating			30 A at 600 Vac maximum			30 A at 24 Vdc maximum		

Table 16.10: Class 2510 Horsepower Ratings

Class 2510	No. of Poles	Motor Type AC	Maximum Hp				Maximum DC Hp (breaking 2 poles)		
			115 V	230 V	460 V	575 V	90 V	115 V	230 V
KO1 KO3	2	Single Ø	2	2	3	3	1	2	1-1/2
KO2 KO4	3	Three Ø	2	7-1/2	10	10			
KO5	2	Single Ø	2	3	7-1/2	10			
KO6	3	Three Ø	2	7-1/2	15	20			
Continuous current rating			30 A at 600 Vac maximum				30 A at 24 Vdc maximum		

Table 16.11: How to Order

To Order Specify:	Catalog Number	
	Class	Type
• Class Number • Type Number	2510	KO2

[5] Furnished with one 3/4" pipe tap in the bottom (reversible for top feed). For a 3/4" pipe tap in the top and bottom, add the suffix **H** to the Type.
[6] For a green pilot light, add the letter **G** to the catalog number (i.e. 2510FG2P**G**)
[7] When replacing a starter equipped with a pilot light in NEMA 4 enclosure, retain the pilot light mounting bracket from the original device.

© 2019 Schneider Electric
All Rights Reserved
11/20/2019

Courtesy of Steven Engineering, Inc - (800) 258-9200 - sales@steveneng.com - www.stevenengineering.com

Open Type

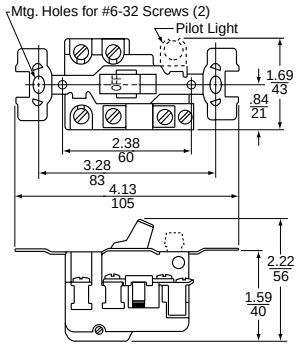

Types FO1, 1P, 2
Fractional Hp Starter

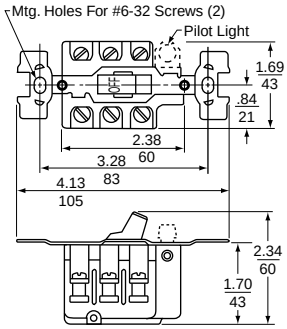

Types KO1, 1A, 1B, 2, 2B, 2C
Types KO5, 5A, 5B, 6, 6B, 6C
Motor Starting Switch

NEMA 1 General Purpose Enclosure (Surface Mount)

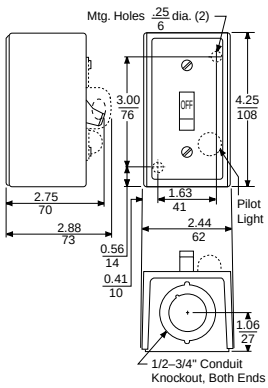

Standard
(Class 2510 Types FG & KG, Single Unit)

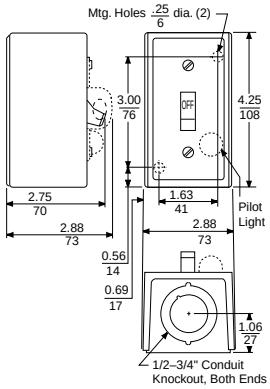

Oversized
(Class 2510 Types FGJ & KGJ, Single Unit)

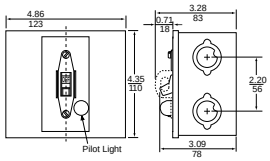

Jumbo
(Class 9991Type KE2, see)

NEMA 1 General Purpose Enclosure (Flush Mount)

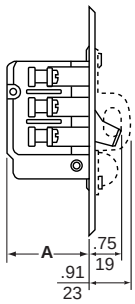

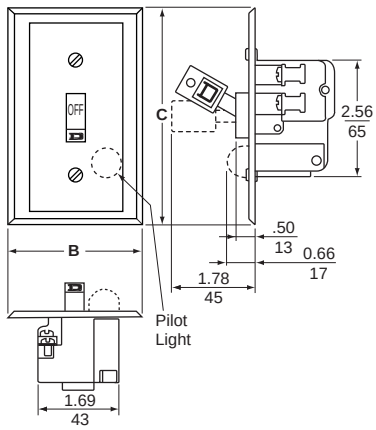

Table 16.12: General Purpose Enclosure (Flush Mount)

Device	Type of Operator	Class 2510 Type	Dimensions		
			A	B	C
Fractional Hp Starter	Toggle	FF1, 1P, 2, 2P, FS1, 1P, 2, 2P	1.44	2.75	4.5
		FSJ1P, 2P	1.44	3.5	5.25
	Key	FF3, 3P, 4, 4P, FS3, 3P, 4, 4P	1.44	2.75	4.5
		FSJ3P, 4P	1.44	3.5	5.25
Motor Starting Switch	Toggle	KF1, 1A, 1B, 2, 2B, 2C KS1, 1A, 1B, 2, 2B, 2C	1.75	2.75	4.5
		KSJ1A, 1B, 2B, 2C	1.75	3.5	5.25
	Key	KF3, 3A, 3B, 4, 4B, 4C KS3, 3A, 3B, 4, 4B, 4C	1.75	2.75	4.5
		KSJ3A, 3B, 4B, 4C	1.75	3.5	5.25

NOTE: These dimensions are for reference only. If you need precise measurements, contact the Customer Care Center at 1-888-778-2733.

NEMA 4 Watertight Die-Cast Zinc Enclosure

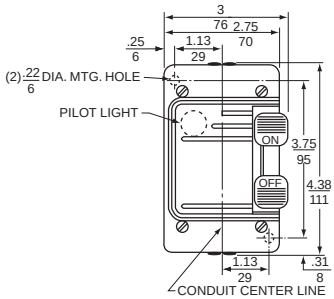

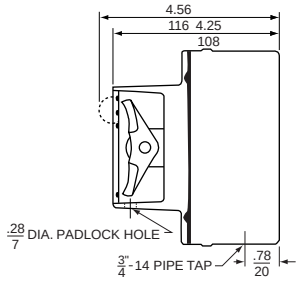

Table 16.13: NEMA 4 Watertight Die-Cast Zinc Enclosure

Device	Class	Type
Fractional Hp Starter	2510	FW1, 1P, 2, 2P
Motor Starting Switch	2510	KW1, 1A, 1B, 2, 2B, 2C

© 2019 Schneider Electric
All Rights Reserved
11/20/2019

Courtesy of Steven Engineering, Inc - (800) 258-9200 - sales@steveneng.com - www.stevenengineering.com

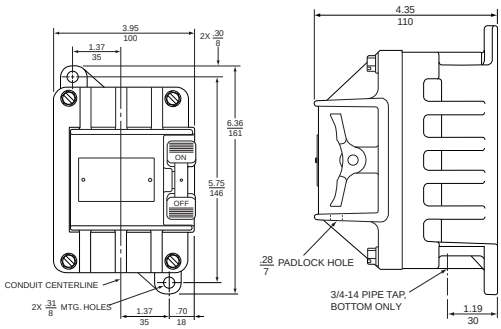

NEMA 3R, 7, and 9 Aluminum Enclosure for Hazardous Locations

Table 16.14: NEMA 3R, 7, and 9 Aluminum Enclosure for Hazardous Locations

Device	Class	Type
Fractional Hp Starter	2510	FR1, 2
Motor Starting Switch	2510	KR1, 2

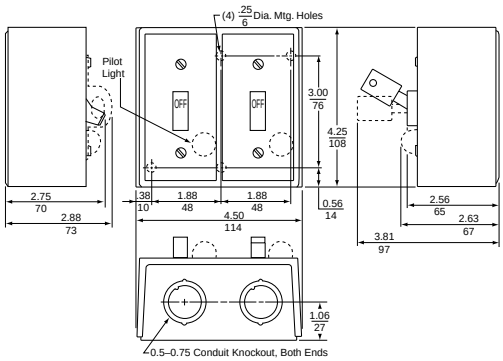

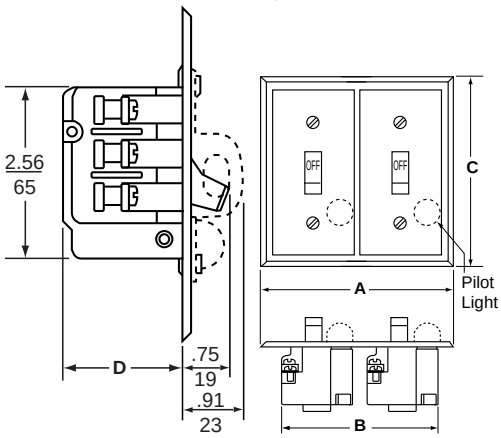

Dimensions for Duplex Devices

NOTE: These dimensions are for reference only. If you need precise measurements, contact the Customer Care Center at 1-888-778-2733.

Table 16.15: NEMA 1 General Purpose Surface Mount Enclosure for Duplex Devices

Device	Type of Operator	Class	Type
One Starter	Toggle	2510	FGO2, 02P
	Key	2510	FGO4P
Two Starters	Toggle	2510	FG22, 22P
	Key	2510	FG44P
One Starter and One Selector Switch*[8]*	Toggle	2510	FG71, 71P, 72, 72P
	Key	2510	FG74P
Reversing Switch*[9]*	Toggle	2511	KG11, 11A, 11B, 22, 22A, 22B, 22C
Two-Speed Starter	Toggle	2512	FG11, 11P, 22, 22P
Two-Speed Switch	Toggle	2512	KG11, 11A, 11B, 22, 22B, 22C

Table 16.16: General Purpose Flush Mounting Plate for Duplex Devices

Device	Type of Operator	Class	Type	Dimensions*[10]*			
				A	B	C	D
Two Starters	Toggle	2510	FF22, 22P	5.25	3.75	5.25	1.44
			FS22P	4.56	3.5	4.5	1.44
	Key	2510	FF44P	5.25	3.75	5.25	1.44
			FS44P	4.56	3.5	4.5	1.44
One Starter and One Selector Switch*[11]*	Toggle	2510	FF71, 71P, 72, 72P	5.25	0.75	5.25	2
			FS71P, 72P	4.56	3.5	4.5	2
	Key	2510	FF74P	5.25	3.75	5.25	2
			FS74P	4.56	3.5	4.5	2
Reversing Switch	Toggle	2511	KF11, 11A, 11B KF22, 22A KF22B, 22C	5.25	3.75	5.25	1.75
Two-Speed Starter	Toggle	2512	FF11, 11P, 22, 22P	5.25	3.75	5.25	1.44
Two-Speed Switch	Toggle	2512	KF11, 11A, 11B, KF22, 22B, 22C	5.25	3.75	5.25	1.75

[8] Selector switch is on the left and increases the overall depth to 3.5 in.
[9] Only one pilot light (located on right) is used on Class 2511 switches.
[10] Dimensions include factory wired power connections.
[11] Selector Switch is on left, extends 1-5/8" from mounting surface.

© 2019 Schneider Electric
All Rights Reserved
11/20/2019

Courtesy of Steven Engineering, Inc - (800) 258-9200 - sales@steveneng.com - www.stevenengineering.com

Integral Horsepower

Types M and T integral horsepower manual starters provide convenient On-Off operation of small single phase, polyphase or DC motors. Typical applications include small machine tools, pumps, fans and conveyors.

- Push button (M) or toggle (T) operators
- Reliable overload protection
- Pilot light and auxiliary contact available

Table 16.17: Integral Horsepower Manual Starters (see Thermal Unit Selection, page 16-132)

Non-Reversing, Class 2510, Max. Voltage: 600 Vac													
No. of Poles	NEMA Size	Ratings			NEMA 1 Surface Mounting		NEMA 4/4X Watertight and Dusttight Enclosure Brushed Stainless Steel	NEMA 4/4X Watertight, Dusttight and Corrosion-Resistant Glass-Polyester Enclosure	NEMA 7 & 9 For Hazardous Locations Class I—Groups C, D Class II—Groups E, F & G	NEMA 12 Dusttight and Driptight Industrial Use Enclosure	Open Type	
		Motor Voltage	Max. Hp		Square P.B. Operator	Toggle Operator					Square P.B. Operator	Toggle Operator
			Poly-Phase	Single Phase	Type		Type	Type	Type *[12]*	Type	Type	
2-Pole	M-0	115 230	— —	1 2	MBG1	TBG1	MBW11 *[13]*	MBW1 *[13]*	MBR1 *[13]*	MBA1 *[13]*	MBO1	TBO1
	M-1	115 230	— —	2 3	MCG1	TCG1	MCW11	MCW1	MCR1	MCA1	MCO1	TCO1
	M-1P	115 230	— —	3 5	MCG2	TCG2	MCW12	MCW2	MCR2	MCA2	MCO2	TCO2
3-Pole	M-0	200-230 380-575	— 3 5	— — —	MBG2	TBG2	MBW12 *[13]*	MBW2 *[13]*	MBR2 *[13]*	MBA2 *[13]*	MBO2	TBO2
	M-1	200-230 380-575	— 7.5 10	— — —	MCG3	TCG3	MCW13	MCW3	MCR3	MCA3	MCO3	TCO3
DC 2-Pole	M-0	115 230	1 hp DC 1.5 hp DC		MBG4	TBG4	MBW14	MBW4	—	MBA4	MBO4	TBO4
	M-1	115 230	1.5 hp DC 2 hp DC		MCG5	TCG5	MCW15	MCW5	MCR5	MCA5	MCO5	TCO5

All Except NEMA 7 and 9
File E42243
CCN NLRV
NEMA 7 and 9 Only
File E58760
CCN NPXZ

All Except NEMA 7 and 9
File LR60905
Class 3211-05
NEMA 7 and 9 Only
File LR26817
Class 3218-04

Table 16.18: How to Order

To Order Specify:	Catalog Number	
	Class	Type
• Class Number • Type Number	2510	MCA1

[12] NEMA 7 & 9 enclosures are cast iron. NEMA 7 & 9 cast aluminum enclosures are also available; to order, replace the **R** in the catalog number with a **T**. For additional information, contact the Customer Care Center.

[13] Approved for group motor installations per NEC 430-53(c).

© 2019 Schneider Electric
All Rights Reserved
11/20/2019

Courtesy of Steven Engineering, Inc - (800) 258-9200 - sales@steveneng.com - www.stevenengineering.com

Reversing and Two Speed

Class 2511 reversing and Class 2512 two-speed manual starters consist of two mechanically interlocked Class 2510 Types M or T manual starters.

Table 16.19: Reversing Class 2511

Class	Description	Number of Poles	NEMA Size	Ratings		NEMA 1 Surface Mounting		Open Type	
				Motor Voltage	Maximum Hp	Square P.B. Operator	Toggle Operator	Square P.B. Operator	Toggle Operator
2511	Standard	3-Pole	M-0	200-230	3	MBG1	TBG1	MBO1	TBO1
				380-575	5				
			M-1	200-230	7-1/2	MCG1	TCG1	MCO1	TCO1
				380-575	10				

Table 16.20: Two Speed, Class 2512 (Wye-Connected Separate Winding Motors Only)

Class	Description	Number of Poles	NEMA Size	Ratings			NEMA 1 Surface Mounting		Open Type	
				Motor Voltage	Constant Hp	Constant Torque or Variable Torque	Square P.B. Operator	Toggle Operator	Square P.B. Operator	Toggle Operator
2512	Standard	3-Pole	M-0	200-230	2	3	MBG1	TBG1	MBO1	TBO1
				380-575	3	5				
			M-1	200-230	5	7-1/2	MCG1	TCG1	MCO1	TCO1
				380-575	7-1/2	10				

Thermal Units

Starters will not operate without properly installed thermal units and device reset. Thermal unit must be installed so that markings face the front of starter.

Application Data

Size–Available in NEMA Sizes M-0, M-1, and M-1P.

Poles–Two poles single phase; three poles polyphase; 2 poles DC.

Voltage–600 Vac max.; 250 Vdc max.

Overload Relays–Melting alloy thermal overload relays have provisions for one Type B thermal unit for single phase starters and three Type B thermal units for three phase starters. **All thermal units must be installed and the device reset before the starter contacts will operate.** After overload relays have tripped, allow one or two minutes for the alloy to solidify before resetting.

Operator–Available with a push button or toggle operator in open and NEMA 1 versions. NEMA 4/4X (stainless) and 12 versions utilize a direct acting push button only. NEMA 4/4X (polyester) and 7/9 versions utilize an external toggle to actuate a push button device inside.

Maintenance of Equipment

For proper performance, all equipment should be periodically inspected and maintained. Replacement contacts and interlocks are available in kit form to facilitate servicing and stocking. In addition, the service bulletin contains an exploded view of the device with components clearly marked for easy identification by description and part number.

Mechanism Lock Off – Both open devices and starters in NEMA 1 surface and flush mounting, and NEMA 4, 4X, 7 & 9, and 12 enclosures can be locked in the Off or Stop position.
The NEMA 1 surface mounting, 4, 4X, 7 & 9, and 12 enclosures can also be locked closed to prevent unauthorized entry.

Table 16.21: Terminal information and Replacement Contact Kits

NEMA Size	Power Terminals		Auxiliary Interlock Terminals		Number of Poles	Service Bulletin	Replacement Contact Kit	
	Type of Lug	Wire Size (Solid or Stranded Copper Wire) Min.-Max.	Type of Lug	Wire Size (Solid or Stranded Copper Wire) Min.-Max.			Class	Type
M-0	Pressure Wire	14–8	Pressure Wire	16–12	2 or 3	312AS	9998	ML1
M-1	Pressure Wire	14–8	Pressure Wire	16–12	2 or 3	312AS	9998	ML2
M-1P	Box Lug	14–6	Pressure Wire	16–12	2	312AS	9998	ML2

Accessories and Modification Kits

One auxiliary contact, either N.O. or N.C. can easily be added internally to any open or enclosed Type M or T manual starter. It occupies the space provided in either the upper right hand or left hand corners of the device. These contacts are for AC loads only. For electrical ratings, refer to page 16-127, Class 9999 Types SX11 or SX12.

A unique red **pilot light** assembly that clips into place is available **factory installed** on NEMA 1, 4, 4X, 12 and flush enclosures or as a **field modification kit** on the NEMA 1 surface or flush mounting enclosures. See page 16-11. The color cap assembly snaps into a knockout in the enclosure cover on the NEMA 1 enclosures. Pilot light kits are available for use on Various voltages (110-600 V). Pilot light assemblies are not available for NEMA 7 and 9 enclosures.

© 2019 Schneider Electric
All Rights Reserved
11/20/2019

Courtesy of Steven Engineering, Inc - (800) 258-9200 - sales@steveneng.com - www.stevenengineering.com

Approximate Dimensions

NEMA 1
General Purpose Surface Mounting

NEMA 12
Dusttight and Driptight
Industrial Use

NEMA 4/4X
Watertight and Dusttight
Stainless Steel

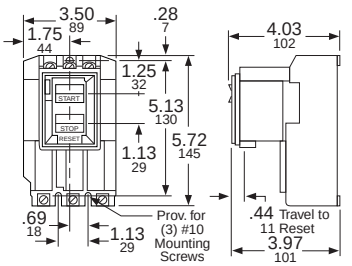

Class 2510 Type M
Sizes M-0, M-1 and M-1P, Open Style
Approximate Shipping Weight: 3 lb

NEMA 4/4X
Watertight, Dusttight
and Corrosion Resistant
Glass Polyester

NEMA 7 & 9
Hazardous Locations
Cast Iron

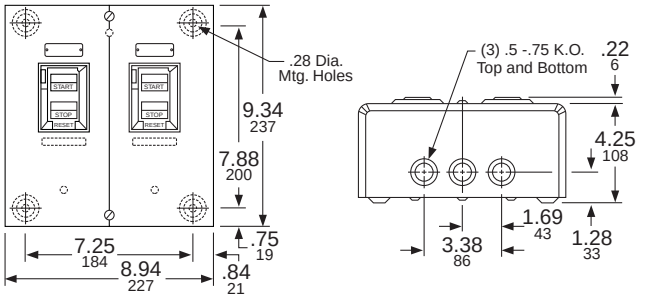

Classes 2511, 2512, Types M & T
Sizes M-0 and M-1 NEMA 1
General Purpose Enclosure
Approximate Shipping Weight: 9 lb

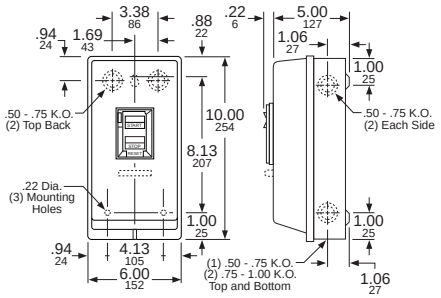

Class 2510 Type M & T Size M-1P
NEMA 1 General Purpose Enclosure
Approximate Shipping Weight: 5 lb

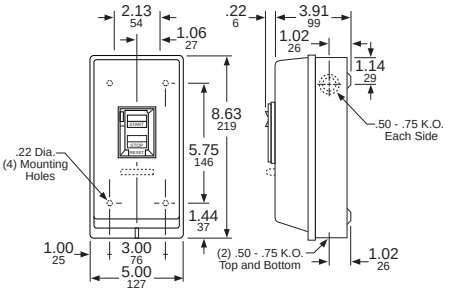

Class 2510 Types M & T Sizes M-0 and M-1
NEMA 1 General Purpose Enclosure
Approximate Shipping Weight: 5 lb

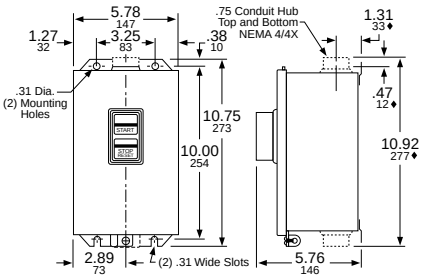

Class 2510 Type M Sizes M-0, M-1 and M-1P
NEMA 4/4X Watertight Stainless Steel Enclosure
NEMA 12 Dusttight Industrial Use Enclosure
Approximate Shipping Weight: 9 lb

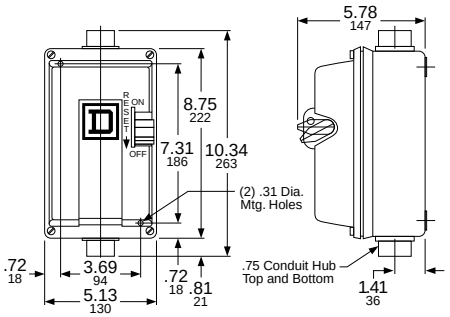

Class 2510 Type M Size M-0 (AC–DC)
and Size M-1 (DC) NEMA 4/4X
Watertight Corrosion-Resistant
Glass Polyester Enclosure
Approximate Shipping Weight—6 lb

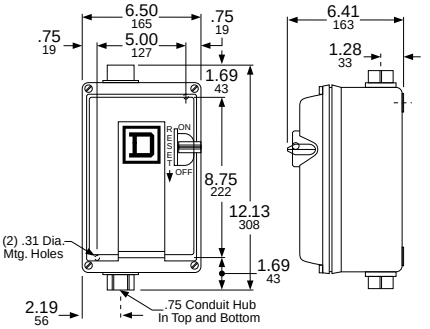

Class 2510 Type M Sizes M-1 and M-1P (AC)
NEMA 4/4X Watertight Corrosion-Resistant
Glass Polyester Enclosure
Approximate Shipping Weight—6 lb

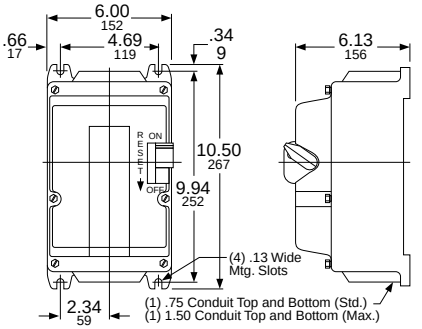

Class 2510 Type M Sizes M-0, M-1 and M-1P
NEMA 7 & 9 Hazardous Location
Cast Iron Enclosure
Approximate Shipping Weight—18 lb

© 2019 Schneider Electric
All Rights Reserved
11/20/2019

Courtesy of Steven Engineering, Inc - (800) 258-9200 - sales@steveneng.com - www.stevenengineering.com

Accessories, Modifications, and Replacement Parts

Table 16.22: P11 Pilot Light Voltage Codes

Voltage	Code
120 V	V02
200/208 V	V08
230 V	V03
460 V	V06
575 V	V07

Table 16.23: Modifications (Types M & T only)

Description	Factory Modifications (Forms)	Field Modification Kits, Class & Type
Red Pilot Light *[14]*	P11*[15]*	9999MP1 (110–120 V) 9999MP2 (208–240 V) 9999MP3 (440–600 V)
Auxiliary Contacts *[16]*	X1 (1 N.O.)	9999SX11 (N.O.)
	X2 (1 N.C.)	9999SX12 (N.C.)
Jumper Straps *[17]*	N/A	9998SO31
Contactor only	Y76	N/A

Table 16.24: Accessories—Class 2510 Types F and K

Description	Class & Type
Handle Guard Kit with Padlock Provision *[18]*	2510FL1
Emergency Off Actuator	2510PB1
Additional Key for Key Operated Devices	2510FK1

Table 16.25: Pilot Light Kits—Class 2510 Types F and K

Application	Voltage	Red Pilot Light	Green Pilot Light
		Class & Type	Class & Type
Type KF, KG, KW *[19]*	110–120 Vac	9999PL11	9999PL11G
	208–277 Vac	9999PL12	9999PL12G
	440–600 Vac	9999PL13	9999PL13G
Type FF, FG, FW *[19]*	115–240 Vac/dc	9999PL10	9999PL10G

Table 16.26: Replacement Nameplates—Class 2510 Types F and K

Description	Application	Nameplate Marking	Nameplate Type Number—Class 2510			
			For Type K Switch		For Type F Starter (includes Reset indication)	
			Without Pilot Light	With Pilot Light	Without Pilot Light	With Pilot Light
1-3/4" x 2-13/16" Nameplate with Embossed Mounting Holes for #6 Oval Head Screws	Standard commercial switch box cover or flush plate, including Square D stainless steel plates	(Blank)	FN1	—	FN2	—
		(Special marking –specify the marking desired)	FN5	—	FN6	—
1-29/32" x 3-27/32" Flat Nameplate with Mounting Holes for #6 Pan Head Screws	Square D NEMA 1 surface mounted enclosure or gray flush plate	(Blank)	FN10	FN20	FN30	FN40
		High	FN11	FN21	FN31	FN41
		Low	FN12	FN22	FN32	FN42
		Forward	FN13	—	—	—
		Reverse	FN14	FN24	—	—
		(Special marking—specify the marking desired)	FN15	FN25	FN35	FN45

Contact Kits

See page 16-124 for Class 9998 Replacement Contact Kits.

Table 16.27: Replacement Part Kits

Enclosure	Product Description	Kit Catalog No.
Replacement Toggle Kits		
NEMA 4	Type FW and KW	9998HW1
NEMA 7 & 9	Type FR and KR	9998HR2
Replacement Handle Kits		
NEMA 12	Type MBA, MCA (Ser. A & B)	9998HWA1
	Type MBA, MCA (Ser. C)	31085-381-50
NEMA 4/4X (Stainless)	Type MBW, MCW (Ser. A & B)	9998HWA1
	Type MBW, MCW (Ser. C)	31085-381-50
NEMA 4/4X (Polyester)	Type MBW (Size 0)	9998HWA1
	Type MCW (Size 1)	9998HR3
NEMA 7 and 9	Type MBR, MCR	9998HR3
Description		**Kit Catalog No.**
Internal Lever		9998IL1

Table 16.28: How to Order

To Order Specify:	Catalog Number	
	Class	Type
• Class Number • Type Number	9991	KE1

Table 16.29: Enclosures

For use with Class 2510 Type	Enclosure	Catalog No.
F and K	NEMA 1 Standard	9991EN1
M: Sizes M-0 & M-1		9991MG1
M: Size M-1P		9991MG2
MBO and MCO	NEMA 1 Flush Mount (with pull box and plaster adjustment)	9991MF1
	NEMA 1 Flush Mount (without pullbox but with mounting strap)	9991MF2
	NEMA 4X (Polyester)	9991MW1
	NEMA 4 (Stainless Steel)	9991MW11
FO1, FO1P, FO2, FO2P, FO3, FO3P, FO4, FO4P	NEMA 1 Oversized	9991FE1
KO1, KO1A, KO1B, KO2, KO2B, KO2C, KO3, KO3A, KO3B, KO4, KO4B, KO4C, KO5, KO5A, KO5B, KO6, KO6B, KO6C	NEMA 1 Oversized	9991KE1
	NEMA 1 Jumbo	9991KE2
	NEMA 3R	9991KE3

[14] May only be field-added to NEMA 1 enclosures. For green pilot light, order 9999SPG1 additionally.
[15] Form P11 pilot lights require a voltage code. Refer to Table 16.22. Catalog number example: 2510MBG1V02P11.
[16] For proper operation, only one auxiliary contact kit per device may be added.
[17] Used to control a single phase motor utilizing a three phase starter.
[18] Standard on Type K devices.
[19] The lens cannot be replaced. The pilot light kits for NEMA 4 enclosed units are for replacement only.

© 2019 Schneider Electric
All Rights Reserved
11/20/2019

Courtesy of Steven Engineering, Inc - (800) 258-9200 - sales@steveneng.com - www.stevenengineering.com

For detailed information about TeSys U, visit www.schneider-electric.com/us.

Power Base

TeSys U Selection

The NEMA style TeSys U motor starter is an integrated product—simple to choose and to install—consisting of a control unit snapped into a power base. TeSys U can be configured to fit specific applications as well. The NEMA style TeSys U starter uses the same optional accessories—reverser, current limiter, predictive maintenance options, and communication options—as the IEC TeSys U.

Selecting a NEMA TeSys U Motor Starter in Three Steps

Table 16.30: Step 1. Select Power Base

Control Connection	NEMA Size	Max. hp, Three Phase				Max. hp, Single Phase		Power Bases
		200/208 V	220/240 V	460 V	575/600 V	120 V	240 V	Catalog Number
With screw terminations	1	7.5	7.5	10	10	2	3	LUB32NR

Table 16.31: Voltage Codes

Volts	24	48–72	110–240
DC	BL[1]	—	—
AC	B	—	—
DC or AC	—	ES[2]	FU

Table 16.32: Step 2. Select Control Unit [3]

Setting Range A	Standard 3-phase Class 10 trip [4]	Advanced 3-Phase Class 10 trip [4]	Advanced Single-Phase Class 10 trip [4]	Advanced 3-Phase Class 20 trip [4]
0.15–0.6	LUCAX6••	LUCBX6••	LUCCX6••	LUCDX6••
0.3–1.4	LUCA1X••	LUCB1X••	LUCC1X••	LUCD1X••
1.25–5.0	LUCA05••	LUCB05••	LUCC05••	LUCD05••
3–12	LUCA12••	LUCB12••	LUCC12••	LUCD12••
4.5–18	LUCA18••	LUCB18••	LUCC18••	LUCD18••
8–32	LUCA32••	LUCB32••	LUCC32••	LUCD32••

Control Unit

Auxiliary Contact

Table 16.33: Step 3. Select Auxiliary Contacts (optional)

Auxiliary Contact Blocks									
Terminals	Contact Indicates	Normal Contact Status	Contact State for Each Mode [5]						Catalog Number
			Off	Ready	Run	Short Circuit Trip	Overload Trip (Manual Reset)	Overload Trip (Remote/Auto Reset) [6]	
Screw	Ready condition	N.O.	O	I	I	O	O	I	LUA1C11
	Fault condition	N.C.	I	I	I	O	O	I	
Screw	Ready condition	N.O.	O	I	I	O	O	I	LUA1C20
	Fault condition	N.O.	O	O	O	I	I	O	

Table 16.34: TeSys U Auxiliary Contact Function Modules

Terminals	Contact Indicates	Normal Contact Status	Catalog Number
Screw	Power pole status	2 N.O.	LUFN20
Screw	Power pole status	1 N.O. and 1 N.C.	LUFN11
Screw	Power pole status	2 N.C.	LUFN02

Table 16.35: TeSys U Accessories

Accessories for LUB32NR	Quick Description	For details and selection, see pages:
Current limiter	Increases the breaking capacity to 130kA @ 460 V	18-25
Reverser	Stacked or side mounted (LU6MB0•• [4] only)	18-25
Line phase barrier	Required for use as a self-protected combination starter (UL508 Type E)	18-25
Multifunction control unit	Has functions for monitoring and predictive maintenance	18-25
Function modules	Fault differentiation, thermal overload, motor load indication	18-25
Communication modules	Integrates into existing networks, major protocols available	18-26
Soft starter + TeSys U	Use Altistart U01Soft Starter with TeSys U	18-42
Power bus bars	TeSys U cabling accessory	18-26
Control circuit accessories	Control circuit contact block, external handles, and control circuit filters	18-26

Accessories and Dimensions: See Section 18.

E164862
CCN NLDX

LR43364
Class 3211 08

[1] DC voltage with range of 0.90 to 1.10 of nominal.
[2] 48–72 Vdc; 48 Vac.
[3] The control unit contains solid-state overload relay and control power source for TeSys U. For more details on the different control units, their functions, and placement on the power base see Section 18.
[4] Complete the catalog number by adding the appropriate voltage code from Table 16.31. For example: LUCAX6FU.
[5] I = closed contact; O = open contact.
[6] Requires a multifunction or advanced control unit, plus fault differentiation module LUFDDA10.

© 2019 Schneider Electric
All Rights Reserved
11/20/2019

Courtesy of Steven Engineering, Inc - (800) 258-9200 - sales@steveneng.com - www.stevenengineering.com

Interpreting the Catalog Number

Table 16.36: TeSys N Catalog Numbering System

T 02 C N 1 3 G7

Product Family

T: TeSys N

Device Type

02: Contactor, page 16-14
36: Starter, page 16-16

NEMA Size

A: Size 00
B: Size 0
C: Size 1
D: Size 2
E: Size 3
F: Size 4
G: Size 5
H: Size 6 *[1]*
J: Size 7 *[1]*

Voltage Code

B7: 24 Vac, 50/60 Hz
BD: 24 Vdc
G7: 120 Vac, 50/60 Hz
LE7: 208 Vac, 50/60 Hz
U7: 240 Vac, 50/60 Hz
T7: 480 Vac, 50/60 Hz

Numerals

Used to define specific, physical arrangements such as number of poles for devices type T02 or protection type for devices type T36. Consult the Digest listings for specific device numbers.

Direction

1: Non-reversing
2: Reversing

Enclosure Type

N: No enclosure

[1] Not available for reversing Type T36 devices.

© 2019 Schneider Electric
All Rights Reserved
11/20/2019

Courtesy of Steven Engineering, Inc - (800) 258-9200 - sales@steveneng.com - www.stevenengineering.com

TeSys N non-reversing contactor, Size 1

TeSys N non-reversing contactor, Size 3

New!

TeSys N Non-Reversing Contactors

TeSys N contactors are used to switch heating loads, capacitors, transformers and electric motors where overload protection is provided separately. TeSys N contactors are available in NEMA Sizes 00–7. Target market segments include hospitals; retail; food and beverage; marine; oil and gas; and mining, metals, and minerals.

Table 16.37: TeSys N Non-Reversing Contactors, 3-Pole Polyphase, 600 Vac Max. (replace ●● with the coil voltage code)

NEMA Size	Continuous Current Rating (A)	Motor Voltage	Max HP	Open Catalog No. [2]
00	9	200	1.5	T02AN13●●
		230	1.5	
		460	2	
		575	2	
0	18	200	3	T02BN13●●
		230	3	
		460	5	
		575	5	
1	27	200	7.5	T02CN13●●
		230	7.5	
		460	10	
		575	10	
2	45	200	10	T02DN13●●
		230	15	
		460	25	
		575	25	
3	90	200	25	T02EN13●●[3]
		230	30	
		460	50	
		575	50	
4	135	200	40	T02FN13●●[3]
		230	50	
		460	100	
		575	100	
5	270	200	75	T02GN13●●[3]
		230	100	
		460	200	
		575	200	
6	540	200	150	T02HN13●●[3]
		230	200	
		460	400	
		575	400	
7	810	200	—	T02JN13●●[3]
		230	300	
		460	600	
		575	600	

Table 16.38: TeSys N Non-Reversing Contactors, 3-Pole Single Phase, 600 Vac Max.
(replace ●● with the coil voltage code)

NEMA Size	Continuous Current Rating (A)	Motor Voltage	Max HP	Open Catalog Number
00	9	115	1/3	T02AN13●●
		230	1	
0	18	115	1	T02BN13●●
		230	2	
1	27	115	2	T02CN13●●
		230	3	
2	45	115	3	T02DN13●●
		230	7.5	

Table 16.39: TeSys N Coil Voltage Codes

Voltage	Voltage Code by NEMA Size								
	Size 00	Size 0	Size 1	Size 2	Size 3	Size 4	Size 5	Size 6	Size 7
24 Vac	B7	B7	B7	B7	B6	B6	n/a		
24 Vdc	BD	BD	BD	BD	BD	BD	n/a		
120 Vac	G7	G7	G7	G7	G7	G7	G7	F7	F7
208 Vac	LE7	LE7	LE7	LE7	L7	L7	L7	L7	L7
240 Vac	U7	U7	U7	U7	U7	U7	U7	U7	U7
480 Vac	T7	T7	T7	T7	S7	S7	S7	N7	N7

Dimensions: page 16-23 to page 16-27
Accessories: page 16-18 to page 16-21
Replacement Parts: page 16-22
Lugs: page 16-21

[2] Replace the bullets (●●) in the catalog number with the coil voltage code. Refer to voltage codes shown in Table 16.39.
[3] Order lugs separately. See . The mounting hardware (screws, washers, and nuts) comes with the contactors, not the lugs. Starters Sizes 3–7 come with lugs.

© 2019 Schneider Electric
All Rights Reserved
11/20/2019

Courtesy of Steven Engineering, Inc - (800) 258-9200 - sales@steveneng.com - www.stevenengineering.com

TeSys N reversing contactor, Size 00

TeSys N reversing contactor, Size 4

New!

TeSys N Reversing Contactors

TeSys N reversing contactors are used for starting, stopping and reversing AC motors where overload protection is provided separately. TeSys N reversing contactors are mechanically and electrically interlocked and are available in NEMA Sizes 00–7. Target market segments include hospitals; retail; food and beverage; marine; oil and gas; and mining, metals, and minerals.

Table 16.40: TeSys N Reversing Contactors, 3-Pole Polyphase, 600 Vac Max. (replace •• with the coil voltage code)

NEMA Size	Continuous Current Rating (A)	Motor Voltage	Max HP	Open Catalog No. [4]
00	9	200	1.5	T02AN23••
		230	1.5	
		460	2	
		575	2	
0	18	200	3	T02BN23••
		230	3	
		460	5	
		575	5	
1	27	200	7.5	T02CN23••
		230	7.5	
		460	10	
		575	10	
2	45	200	10	T02DN23••
		230	15	
		460	25	
		575	25	
3	90	200	25	T02EN23••[5]
		230	30	
		460	50	
		575	50	
4	135	200	40	T02FN23••[5]
		230	50	
		460	100	
		575	100	
5	270	200	75	T02GN23••[5]
		230	100	
		460	200	
		575	200	
6	540	200	150	T02HN23••[5]
		230	200	
		460	400	
		575	400	
7	810	200	—	T02JN23••[5]
		230	300	
		460	600	
		575	600	

Table 16.41: TeSys N Reversing Contactors, 3-Pole Single Phase, 600 Vac Max. (replace •• with the coil voltage code)

NEMA Size	Continuous Current Rating (A)	Motor Voltage	Max HP	Open Catalog No. [4]
00	9	115	1/3	T02AN23••
		230	1	
0	18	115	1	T02BN23••
		230	2	
1	27	115	2	T02CN23••
		230	3	
2	45	115	3	T02DN23••
		230	7.5	

Table 16.42: TeSys N Coil Voltage Codes

Voltage	Voltage Code by NEMA Size								
	Size 00	Size 0	Size 1	Size 2	Size 3	Size 4	Size 5	Size 6	Size 7
24 Vac	B7	B7	B7	B7	B6	B6	n/a		
24 Vdc	BD	BD	BD	BD	BD	BD	n/a		
120 Vac	G7	G7	G7	G7	G7	G7	G7	F7	F7
208 Vac	LE7	LE7	LE7	LE7	L7	L7	L7	L7	L7
240 Vac	U7	U7	U7	U7	U7	U7	U7	U7	U7
480 Vac	T7	T7	T7	T7	S7	S7	S7	N7	N7

Dimensions: page 16-23 to page 16-27
Accessories: page 16-18 to page 16-21
Replacement Parts: page 16-22
Lugs: page 16-21

[4] Replace the bullets (••) in the catalog number with the coil voltage code. Refer to the voltage codes shown in Table 16.42.
[5] Order lugs separately. See . The mounting hardware (screws, washers, and nuts) comes with the contactors, not the lugs. Starters Sizes 3–7 come with lugs.

© 2019 Schneider Electric
All Rights Reserved
11/20/2019

Courtesy of Steven Engineering, Inc - (800) 258-9200 - sales@steveneng.com - www.stevenengineering.com

TeSys N non-reversing starter, Size 1

TeSys N Size 1 Contactor + TeSys LRD Bimetallic Overload Relay

TeSys N non-reversing starter, Size 3

TeSys N Size 1 Contactor + TeSys LR9D Electronic Overload Relay

For more information on TeSys D relays, see Section 18.

Dimensions: page 16-23
TeSys N Accessories: pages page 16-18

New!

TeSys N Non-Reversing Starters

TeSys N starters are used for full-voltage starting and stopping of AC squirrel-cage motors. Starters are available in NEMA Sizes 00–7 and come standard with Motor Logic Class 10/20 selectable solid-state overload relays. Starters with bimetal overload protection can be assembled from TeSys N contactors and TeSys D overload relays.

Table 16.43: 3-Pole Polyphase, 600 Vac Max. (replace •• with the coil voltage code)

NEMA Size	Continuous Current Rating (A)	Motor Voltage	Max HP	Open Catalog No. [6]
00	9	200	1.5	T36AN13••
		230	1.5	
		460	2	
		575	2	
0	18	200	3	T36BN13••
		230	3	
		460	5	
		575	5	
1 [7]	27	200	7.5	T36CN13••
		230	7.5	
		460	10	
		575	10	
2	45	200	10	T36DN13••
		230	15	
		460	25	
		575	25	
3	90	200	25	T36EN13••
		230	30	
		460	50	
		575	50	
4	135	200	40	T36FN13••
		230	50	
		460	100	
		575	100	
5	270	200	75	T36GN13••
		230	100	
		460	200	
		575	200	
6	540	200	150	T36HN13••
		230	200	
		460	400	
		575	400	
7	810	200	—	T36JN13••
		230	300	
		460	600	
		575	600	

Table 16.44: TeSys N Coil Voltage Codes

Voltage	Voltage Code by NEMA Size								
	Size 00	Size 0	Size 1	Size 2	Size 3	Size 4	Size 5	Size 6	Size 7
24 Vac [8]	B7	B7	B7	B7	B6	B6	—	—	—
24 Vdc [9]	BD	BD	BD	BD	BD	BD	—	—	—
120 Vac [8]	G7	G7	G7	G7	G7	G7	G7	F7	F7
208 Vac	LE7	LE7	LE7	LE7	L7	L7	L7	L7	L7
240 Vac	U7	U7	U7	U7	U7	U7	U7	U7	U7
480 Vac	T7	T7	T7	T7	S7	S7	S7	N7	N7

Table 16.45: TeSys LR9D Electronic Overload Relays

Current Setting Range (A)	For Direct Mounting to TeSys N Contactors	Class 5/10/20/30 Selectable
0.1–0.5	Size 00–1	LR9D01
0.4–2.0		LR9D02
1.6–8.0		LR9D08
6.4–32		LR9D32

Table 16.46: TeSys D Overload Relays—Ambient Compensated, Bimetallic, Direct Mounting

Current Setting Range (A)	For Direct Mounting to TeSys N Contactors	Class 10 with Single-Phase Sensitivity	Class 10 without Single-Phase Sensitivity	Class 20 with Single-Phase Sensitivity	Class 20 without Single-Phase Sensitivity
0.10–0.16	Size 00–1	LRD01	LR3D01	—	—
0.16–0.25	Size 00–1	LRD02	LR3D02	—	—
0.25–0.40	Size 00–1	LRD03	LR3D03	—	—
0.40–0.63	Size 00–1	LRD04	LR3D04	LRD04L	LR3D04L
0.63–1	Size 00–1	LRD05	LR3D05	LRD05L	LR3D05L
1–1.6	Size 00–1	LRD06	LR3D06	LRD06L	LR3D06L
1.6–2.5	Size 00–1	LRD07	LR3D07	LRD07L	LR3D07L
2.5–4	Size 00–1	LRD08	LR3D08	LRD08L	LR3D08L
4–6	Size 00–1	LRD10	LR3D10	LRD10L	LR3D10L
5.5–8	Size 00–1	LRD12	LR3D12	LRD12L	LR3D12L
7–10	Size 00–1	LRD14	LR3D14	LRD14L	LR3D14L
9–13	Size 0–1	LRD16	LR3D16	LRD16L	LR3D16L
12–18	Size 0–1	LRD21	LR3D21	LRD21L	LR3D21L
16–24	Size 0–1	LRD22	LR3D22	—	—
17–24	Size 0–1	—	—	LRD22L	LR3D22L
23–32	Size 1	LRD32	LR3D32	LRD32L	LR3D32L
9–13	Size 2	LRD313	LR3D313	LRD313L	—
12–18	Size 2	LRD318	LR3D318	LRD318L	—
16–25	Size 2	LRD325	LR3D325	LRD325L	—
23–32	Size 2	LRD332	LR3D332	LRD332L	—
30–40	Size 2	LRD340	LR3D340	LRD340L	—
37–50	Size 2	LRD350	LR3D350	LRD350L	—

[6] Replace the bullets (••) in the catalog number with the coil voltage code. Refer to the coil voltage codes shown in Table 16.44.
[7] Special size combinations of the contactor and Motor Logic overload relay are available. Add **0** to the catalog number before the coil voltage for a Size 0 overload relay (6–18 A); **9** for a Size 00C (3–9 A); and **8** for a Size 00B (1.5–4.5 A)—for example, T36CN13**0**G7.
[8] The 24 and 120 Vac coils are available with optional separate control; add **Form S** to the catalog number (for example, T36AN13B7**S**).
[9] The 24 Vdc coil requires separate control; add Form S to the catalog number (for example, T36AN13BD**S**).

© 2019 Schneider Electric
All Rights Reserved
11/20/2019

Courtesy of Steven Engineering, Inc - (800) 258-9200 - sales@steveneng.com - www.stevenengineering.com

TeSys N reversing starter, Size 00

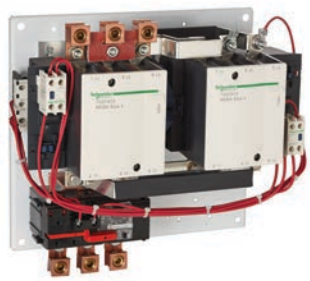

TeSys N reversing starter, Size 4

New!

TeSys N Reversing Starters

TeSys N reversing starters are used for full-voltage starting, stopping, and reversing of AC squirrel cage motors. Reversing starters are mechanically and electrically interlocked and are available in NEMA Sizes 00 through 5. Starters come with Motor Logic Class 10/20 selectable solid-state overload relays as standard. Reversing starters with bimetal overload protection can be assembled from TeSys N reversing contactors and TeSys D overload relays. For more information on TeSys D overload relays, see Section 18.

Table 16.47: TeSys N Reversing Starters, 3-Pole Polyphase, 600 Vac Max. (replace ●● with the coil voltage code)

NEMA Size	Continuous Current Rating (A)	Motor Voltage	Max HP	Open Catalog No. *[10]*
00	9	200	1.5	T36AN23●●
		230	1.5	
		460	2	
		575	2	
0	18	200	3	T36BN23●●
		230	3	
		460	5	
		575	5	
1*[11]*	27	200	7.5	T36CN23●●
		230	7.5	
		460	10	
		575	10	
2	45	200	10	T36DN23●●
		230	15	
		460	25	
		575	25	
3	90	200	25	T36EN23●●
		230	30	
		460	50	
		575	50	
4	135	200	40	T36FN23●●
		230	50	
		460	100	
		575	100	
5	270	200	75	T36GN23●●
		230	100	
		460	200	
		575	200	

Table 16.48: TeSys N Coil Voltage Codes

Voltage	Voltage Code by NEMA Size						
	Size 00	Size 0	Size 1	Size 2	Size 3	Size 4	Size 5
24 Vac*[12]*	B7	B7	B7	B7	B6	B6	n/a
24 Vdc *[13]*	BD	BD	BD	BD	BD	BD	n/a
120 Vac*[12]*	G7	G7	G7	G7	G7	G7	G7
208 Vac	LE7	LE7	LE7	LE7	L7	L7	L7
240 Vac	U7	U7	U7	U7	U7	U7	U7
480 Vac	T7	T7	T7	T7	S7	S7	S7

Dimensions: page 16-23 to page 16-27
Accessories: page 16-18 to page 16-21
Replacement Parts: page 16-22
Lugs: page 16-21

E164862
CCN NLDX

LR43364
Class 3211 04

[10] Replace the bullets (●●) in the catalog number with the coil voltage code. Refer to the coil voltage codes shown in Table 16.48.
[11] Special size combinations of the contactor and Motor Logic overload relay are available. Add **0** to the catalog number before the coil voltage for Size 0 overload relays (6–18 A); **9** for Size 00C (3–9 A); and **8** for Size 00B (1.5–4.5 A)—for example, T36CN23**0**G7.
[12] The 24 and 120 Vac coils are available with optional separate control; add **Form S** to the catalog number (for example, T36AN13B7**S**).
[13] The 24 Vdc coil requires separate control; add Form S to the catalog number (for example, T36AN23BD**S**).

© 2019 Schneider Electric
All Rights Reserved
11/20/2019

Courtesy of Steven Engineering, Inc - (800) 258-9200 - sales@steveneng.com - www.stevenengineering.com

Front Mounted Auxiliary Blocks

Auxiliary Contacts, Time Delay, Mechanical Latch

Table 16.49: Standard, Instantaneous Auxiliary Contact Blocks

Snap-On Mounting	Number of Contacts	Composition N.O.	Composition N.C.	Catalog Number
To front of Size 00–2 or **To right side of** Size 3–7	4	2	2	LADN22 *[14]*
		1	3	LADN13 *[14]*
		4	0	LADN40 *[14]*
		0	4	LADN04 *[14]*
		3	1	LADN31 *[14]*
		2 *[15]*	2 *[15]*	LADC22 *[15]*
	2	1	1	LADN11 *[14]*
		2	0	LADN20 *[14]*
		0	2	LADN02 *[14]*
To left side of Size 3–7	1	1	0	LADN10
		0	1	LADN01
To side of Size 00–2	2	1	1	LAD8N11 *[16]*
		2	0	LAD8N20 *[16]*

Table 16.50: Instantaneous Blocks with Dust-Tight Auxiliary Contacts (IP54) NEMA 12

Snap-On Mounting	Standard Contacts N.O.	Standard Contacts N.C.	Dust-Tight Contacts N.O.	Dust-Tight Contacts N.C.	Catalog Number
To front of Size 00–2 or **To right side of** Size 3–7	—	—	2	—	LA1DX20
	2	—	2	—	LA1DZ40
	1	1	2	—	LA1DZ31
	—	—	2	—	LA1DY20 *[17]*

Table 16.51: Pneumatic Time Delay Contact Blocks

Snap-On Mounting	Time Delay Contacts N.O.	Time Delay Contacts N.C.	Type	Range of Time Delay	Catalog Number *[18]*
To front of Size 00–2 or **To right side of** Size 3–7	1	1	On energization (on delay)	0.1 to 3 s *[19]*	LADT0
				0.1 to 30 s	LADT2
				10 to 180 s	LADT4
				1 to 30 s *[20]*	LADS2
	1	1	On de-energization (off-delay)	0.1 to 3 s *[19]*	LADR0
				0.1 to 30 s	LADR2
				10 to 180 s	LADR4

Table 16.52: Mechanical Latch Blocks with Manual or Electrical Unlatch

Front snap-on mounting onto	Application	Catalog Number
Size 00–2	For silent operation and energy conservation	LAD6K10 *[21][22]*

Table 16.53: Coil Voltage Codes for LA6DK Mechanical Latch Blocks

Volts	24	120	208	240	480
AC or DC *[23]*	B	F	L	M	R

[14] For spring terminal versions of these blocks, add a **3** to the end of the catalog number (for example, LADN22**3**). For slip-on versions, add **9** to the end of the catalog number (for example, LADN22**9**).
[15] Including 1 N.O. + 1 N.C. make-before-break overlapping contacts.
[16] 1 block may be added to the left side of Size 00–1, AC coils only; only 1 block may be added to either side of the Size 2 contactor, AC coil only. Cannot be installed on Size 00–2 contactors with DC coils.
[17] Device comes with 4 ground terminal points.
[18] For spring terminal versions of these blocks, add a **3** to the end of the catalog number (for example, LADT2**3**). There is no charge for this modification.
[19] Scale range is expanded between 0.1 and 0.6 seconds on the dial for more accurate settings at the lower end of the range.
[20] Switching time between the opening of the N.C. contact and the closing of the N.O. contact: 40 ms ± 15 ms .
[21] Complete the catalog number by adding the coil voltage code (for example, LAD6K10F).
[22] Does not include internal coil clearing contact.
[23] DC available at 24 V only.

© 2019 Schneider Electric
All Rights Reserved
11/20/2019

Courtesy of Steven Engineering, Inc - (800) 258-9200 - sales@steveneng.com - www.stevenengineering.com

TeSys™ N Reversing Contactors: Field Assembly

Table 16.54: Contactors

For assembly of reversing contactors comprising two identical, horizontally mounted contactors without common baseplate:	Mechanical interlock		Set of power connections
	Without electrical interlock	With incorporated electrical interlock (2 N. C. contacts)	Reversing contactors for motor control
	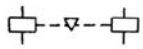	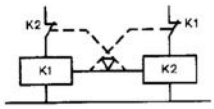	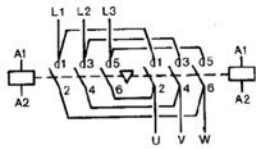
	Catalog Number	Catalog Number	Catalog Number
Size 00-1	LAD9R1 *[24]*	LAD9R1V *[24]*	Included with kit
	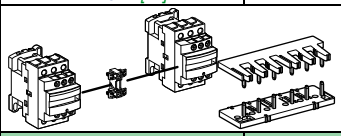		
	Catalog Number	Catalog Number	Catalog Number
LC1D40A, D50A, D65A	LAD4CM	—	LA9D65A69
	LAD9R3 *[25]*	—	—
	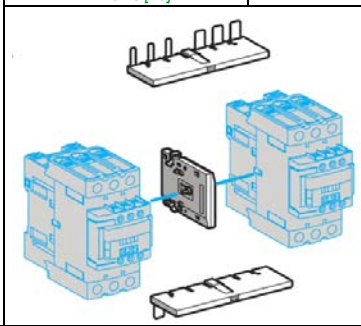		
Reversing contactors comprising two identical, horizontally mounted contactors			
	Catalog Number	Catalog Number	Catalog Number
Size 3	LA9FF970	—	LA9FF976
Size 4		—	LA9F15076
Size 5	LA9FJ970	—	LA9FJ976
Size 6		—	LA9FK976
Size 7	LA9FL970	—	LA9FL976
	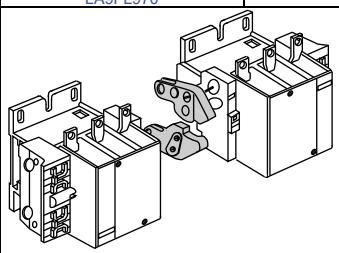 LA9F●970		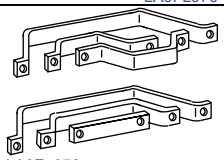 LA9F●976

[24] Kit including mechanical interlock and wiring.
[25] Kit combines both LAD4CM and LA9D65A69

© 2019 Schneider Electric
All Rights Reserved
11/20/2019

Courtesy of Steven Engineering, Inc - (800) 258-9200 - sales@steveneng.com - www.stevenengineering.com

Coil Suppressors and Cabling Accessories

RC Coil Suppressor

LA4DA1U

- Transient voltage limited to 300% of nominal voltage, maximum.
- Oscillating frequency is limited to 400 Hz maximum. Slight increase in drop-out time (1.2 to 2 times normal).

Table 16.55: Resistor/Capacitor Circuit (RC) for Reduction of Electrical Noise in AC Contactor Coils

Installed by	Mounting on	Operating Voltage 50/60 Hz	Catalog Number
Snapping into the cavity on the right side without tools *[26]*	Size 00–1	24 V	LAD4RCE
		120 V	LAD4RCG
		120–240 V	LAD4RCU
Snap-on mounting, and connection without tools to the contactor coil terminals	Size 2	24 V	LAD4RC3E
		120 V	LAD4RC3G
		120-240 V	LAD4RC3U

Varistor Coil Suppressor

- Transient voltage value limited to 200% of nominal voltage, maximum.
- Maximum reduction of transient voltage peaks. Slight increase in drop-out time (1.1 to 1.5 times normal).

Table 16.56: Varistor (Peak Limiting) for Reduction of Electrical Noise in AC Contactor Coils

Installed by	Mounting on	Operating Voltage 50/60 Hz	Catalog Number
Snapping into the cavity on the right side without tools*[26]*	Size 00–1	24 V	LAD4VE
		120 V	LAD4VG
		120–240 V	LAD4VU
Snap-on mounting, and connection without tools to the contactor coil terminals	Size 2	24 V	LAD4V3E
		120 V	LAD4V3G
		120-240 V	LAD4V3U

Diode Coil Suppressor

- No overvoltage or oscillating frequency.
- Polarized component. Increased drop-out time (6–10 times normal).

Table 16.57: Diode for Reduction of Electrical Noise in DC Contactor Coils

Installed on the upper part by	Mounting on	Operating Voltage, DC	Catalog Number
Snap-on mounting and connection w/o tools to the contactor coil terminals	Size 00–1	24 Vdc	LAD4DDL
Clip-on front mounting	Size 2	24 Vdc	LAD4D3U

LAD4T3B

Bidirectional Diode Coil Suppressor

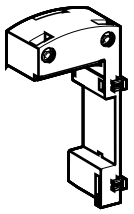

LAD4BB• •

- Protection provided by limiting the transient voltage to 2 Uc max.
- Maximum reduction of transient voltage peaks.

Table 16.58: Bidirectional Peak Limiting Diode

Installed by	Mounting on	Operating Voltage 50/60 Hz and DC	Catalog Number
Snapping into the cavity on the right side of the contactor *[26]*	Size 00–1*[27]*	24 (AC only)	LAD4TB
Clip-on front mounting and connection without tools to the contactor coil terminals *[27]*	Size 2	24 V	LAD4T3B
		120 V	LAD4T3G
		208–240 V	LAD4T3U

TeSys N Cabling Accessories

Table 16.59: Cabling Accessories

Usage	Mounting on	Operating Voltage 50/60 Hz		Catalog Number
For adapting existing wiring to a new product or for use with top-mounting accessory.	Size 00–1, AC only	Without coil suppression		LAD4BB
		With coil suppression (varistor)	24 V	LAD4BBVE
			120 V	LAD4BBVG
			120-240 V	LAD4BBVU
For adapting existing wiring to a new product or for use with top-mounting accessory	Size 2, AC only	—		LAD4BB3

[26] Installing the suppressor into the cavity makes the electrical connection. The overall width of the contactor remains the same.
[27] For Size 00–2 with DC coils, 3-pole contactors are fitted with built-in bidirectional diode suppression as standard.

© 2019 Schneider Electric
All Rights Reserved
11/20/2019

Courtesy of Steven Engineering, Inc - (800) 258-9200 - sales@steveneng.com - www.stevenengineering.com

Electronic Timers and Interface Modules

The following accessories require use of cabling accessories (LAD4BB●●) for proper mounting. See page 16-20 for illustration.

The solid-state **Electronic Serial Timer Modules** in Table 16.60 delay the energizing of the contactor coil, and feature built-in varistor surge suppression.

Table 16.60: Electronic Serial Timer Modules

Type	Operational Voltage 24–250 Vac	Time Delay	Catalog Number
On-delay	Size 00–2	0.1–2 s	LA4DT0U
		1.5–30 s	LA4DT2U
		25–500 s	LA4DT4U

The **Interface Modules** in Table 16.61 allow the contactor coils to be energized from low voltage and low current level signals. They come in mechanical relay and solid-state versions. The relay plus manual operation versions include a lever for manually turning the contactor on and off. When a module receives a low-level signal, it allows the separate-sourced control voltage to flow to the contactor coil. It saves space and wiring time compared to conventional interposing relays.

Table 16.61: Interface Modules *[28]*

Interface Type	Operational Voltage 24–250 Vac	Input Voltage	Catalog Number
Relay	Size 00–2	24 Vdc	LA4DFB
Relay Plus Manual Operation	Size 00–2	24 Vdc	LA4DLB
Solid State	Size 00–2	24 Vdc	LA4DWB

Table 16.62: Lugs and Lug Kits *[29]*

TeSys N Contactor	Lugs		Lug Kits*[30]*	Cable size AWG range
	Line Size	Load Side		
Size 3	3 each DZ2FF1	3 each DZ2FF1	DZ2FF6	14 to 2/0
Size 4	3 each DZ2FG1	3 each DZ2FG1	DZ2FG6	6 to 3/0
Size 5	3 each DZ2FJ1	3 each DZ2FJ1	DZ2FJ6	4 to 500 MCM
Size 6	3 each DZ2FK1	3 each DZ2FK1	DZ2FK6	2 x 2 to 600 MCM
Size 7	1 each DZ2FL1 DZ2FL2 DZ2FL3	1 each DZ2FL1 DZ2FL2 DZ2FL3	DZ2FL6	3 x 2 to 600 MCM

Table 16.63: TeSys Safety-Chain Identification System

Description	Compatibility	Package Qty	Catalog Number
Red retrofit contactor safety cover	Size 00–2	10	LAD9ET1S
Red auxiliary contact block, 2 N.O. + 2 N.C.	Size 00–2	1	LADN22S

LA4DFB

LAD9ET1S

LADN22S

[28] Adapter required. See Table 16.59.
[29] The mounting hardware (screws, washers, and nuts) comes with the contactors, not the lugs. Starters Sizes 3–7 come with lugs.
[30] Lug kits incude 6 lugs.

© 2019 Schneider Electric
All Rights Reserved
11/20/2019

Courtesy of Steven Engineering, Inc - (800) 258-9200 - sales@steveneng.com - www.stevenengineering.com

Replacement Contacts and Coils

Table 16.64: Replacement Contact Sets *[31]*

For use on contactors	Number of Poles	Catalog Number
Size 3–4	3 poles	LA5FF431
Size 5	3 poles	LA5F400803
Size 6	3 poles	LA5F500803
Size 7	3 poles	LA5F630803

TeSys N Magnet Coils

Table 16.65: Size 00–1 AC Coils

Rated Nominal Voltage	Catalog Number 50/60 Hz
24	LXD1B7
32	LXD1C7
36	LXD1CC7
42	LXD1D7
48	LXD1E7
60	LXD1EE7
100	LXD1K7
110	LXD1F7
115	LXD1FE7
120	LXD1G7
127	LXD1FC7
200	LXD1L7
208	LXD1LE7
220/230	LXD1M7
230	LXD1P7
230/240	LXD1U7
277	LXD1W7
380/400	LXD1Q7
400	LXD1V7
415	LXD1N7
440	LXD1R7
480	LXD1T7
575	LXD1SC7
600	LXD1X7
Specifications	50/60 Hz
Average consumption - Inrush (inductance 0.75) - Sealed (inductance 0.3)	 70 VA 7 VA
Operating range@ 60 °C	50 Hz: 80–110% of nominal 60 Hz: 85–110% of nominal

Table 16.66: Size 2 AC Coils

Rated Nominal Voltage V	Catalog Number 50/60 Hz
24	LXD3B7
32	LXD3C7
42	LXD3D7
48	LXD3E7
100	LXD3K7
110	LXD3F7
115	LXD3FE7
120	LXD3G7
127	LXD3FC7
200	LXD3L7
208	LXD3LE7
220	LXD3M7
230	LXD3P7
240	LXD3U7
277	LXD3W7
380	LXD3Q7
400	LXD3V7
415	LXD3N7
440	LXD3R7
480	LXD3T7
500	LXD3S7
575	LXD3SC7
600	LXD3X7
Specification	**50/60 Hz**
Average consumption: - Inrush (inductance 0.3) - Sealed (inductance 0.3)	 140 VA (inductance: 0.9) 7.5 VA (inductance: 0.9)
Operating range at θ < 55 °C / 131 °F	80–115% of nominal voltage

Table 16.67: Size 3–7 AC Coils

Contactor Size	Hz	Catalog Number	Catalog Number Suffix *[32]*												
			24 V	48 V	110 V	120 V	208 V	220 V	240 V	277 V	380 V	415 V	440 V	480 V	600 V
Size 3–4	40–400	LX9FF ●	— *[33]*	048	110	127	200	220	240	280	380	415	415	500	— *[33]*
Size 5	40–400	LX1FH●	0242	0482	1102	1272	2002	2202	2402	2772	3802	3802	4402	5002	6002
Size 6*[34]*	40–400	LX1FK●	—	048	110	110	200	220	240	280	380	415	415	415	600
Size 7*[34]*	40–400	LX1FL ●	—	048	110	110	200	220	240	260	380	415	415	415	600

Table 16.68: Size 3–4 DC Coils

Device Type	Catalog Number	Catalog Number Suffix *[35]*									
		24 V	36 V	48 V	60 V	72 V	110 V	125 V	220 V	250 V	440 V
Size 3–4	LX4FF ●	024	035	048	060	070	110	125	220	250	440

[31] Provided per pole: 2 fixed contacts, 1 movable contact, 2 deflectors, 1 backplate, and the mounting screws and washers.
[32] Complete the catalog number by adding the suffix (for example, LX9FF020).
[33] LX1FF020 and LC1FF475 coils will be available for replacement **only**.
[34] The 600 V coils for Sizes 6 and 7 do not include an auxiliary contact for holding circuits. If required, select the appropriate contacts from page 16-18.
[35] Complete the catalog number by adding the suffix (for example, LX4FF024).

© 2019 Schneider Electric
All Rights Reserved
11/20/2019

Courtesy of Steven Engineering, Inc - (800) 258-9200 - sales@steveneng.com - www.stevenengineering.com

TeSys™ N Non-Reversing Contactors

Table 16.69: TeSys N Contactors, Size 00–1, Non-Reversing *[36]*

Dimensional Diagram	Dimension	Description	Dimensions			
			AC Coil		DC Coil	
			in.	mm	in.	mm
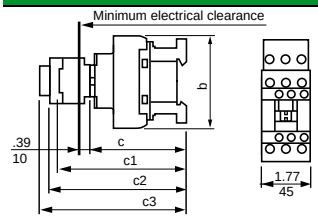	b	Without add-on accessories	3.35	85	3.35	85
	b1	With LAD4BB	3.86	98	n/a	n/a
		With LA4D•2	4.49	114	n/a	n/a
		With LA4DF, DT	4.84	123	n/a	n/a
		With LA4DR, DW, DL	5.12	130	n/a	n/a
	c	Without cover or add-on blocks	3.54	90	3.90	99
		With cover, without add-on blocks	3.62	92	3.98	101
	c1	With LADN or LADC	4.84	123	5.20	132
	c2	With LAD6K10	5.31	135	5.67	144
	c3	With LADT, R, S	5.63	143	5.98	152
		With LADT, R, S and sealing cover	5.79	147	6.14	156

Table 16.70: TeSys N Contactors, Size 2, Non-Reversing *[36]*

Dimensional Diagram	Dimension	Description	Dimensions	
			AC or DC Coils	
			in.	mm
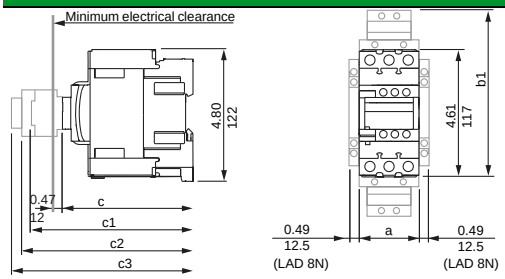	a	Contactor	2.17	55
	b1	With LA4 DB3 or LAD 4BB3	5.35	136
		With LA4 DF, DT	6.18	157
		With LA4 DM, DW, DL	6.54	166
	c	Without cover or add-on blocks	4.65	118
		With cover, without add-on blocks	4.72	120
	c1	With LAD N or C (2 or 4 contacts)	5.91	150
	c2	With LAD 6K10 or LA6 DK	6.42	163
	c3	With LAD T, R, S	6.73	171
		With LAD T, R, S and sealing cover	6.89	175

Table 16.71: TeSys N Contactors, Size 3–7, Non-Reversing

Dimensional Diagram, Size 3–5	Dimension	Dimensions					
		T02EN13		T02FN13		T02GN13	
		in.	mm	in.	mm	in.	mm
T02EN13 **T02FN13** **T02GN13** 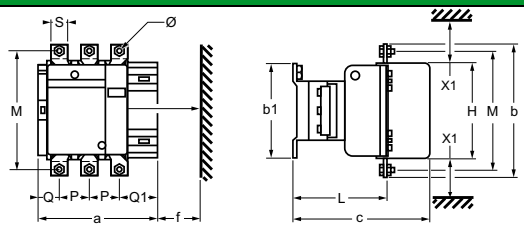	a	6.4	163.5	6.4	163.5	8.4	213
	P	1.5	37	1.6	40	1.9	48
	Q	1.2	29.5	1	26	1.7	43
	Q1	2.4	60	2.3	57.5	2.9	74
	S	0.8	20	0.8	20	1	25
	ø	M6		M8		M10	
	f	5.2	131	5.2	131	5.8	147
	b	6.4	162	6.7	170	8.1	206
	b1	5.4	137	5.4	137	5.7	145
	M	5.8	147	5.9	150	7.1	181
	H	4.9	124	4.9	124	6.2	158
	c	6.7	171	6.7	171	8.6	219
	L	4.2	107	4.2	107	5.7	145
	X1 220–500 V	0.4	10	0.4	10	0.4	10

Dimensional Diagram, Size 6	Dimension	T02HN13	
		in.	mm
T02HN13 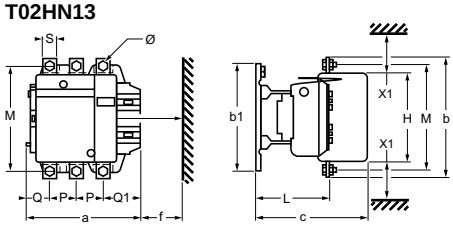	a	9.2	233
	P	2.2	55
	Q	1.8	46
	Q1	3	77
	S	1.2	30
	ø	M10	
	f	5.9	150
	b	9.4	238
	b1	8.2	209
	M	8.2	208
	H	6.8	172
	c	9.1	232
	L	5.7	146
	X1 220–500 V	0.6	15

Dimensional Diagram, Size 7	Dimension	T02JN13	
		in.	mm
T02JN13 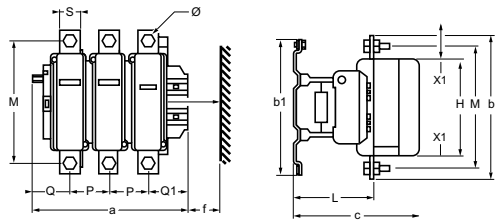	a	12.2	309
	P	3.2	80
	Q	2.4	60
	Q1	3.5	89
	S	1.6	40
	ø	M12	
	f	7.1	181
	b	12	304
	b1	11	280
	M	10.4	264
	H	8	202
	c	10	255
	L	6.1	155
	X1 220–500 V	0.8	20

[36] DIN rail and panel mountable.

© 2019 Schneider Electric
All Rights Reserved
11/20/2019

Courtesy of Steven Engineering, Inc - (800) 258-9200 - sales@steveneng.com - www.stevenengineering.com

TeSys™ N Reversing Contactors

Table 16.72: TeSys N Size 00–1, Reversing Contactors [37]

Dimensional Diagram

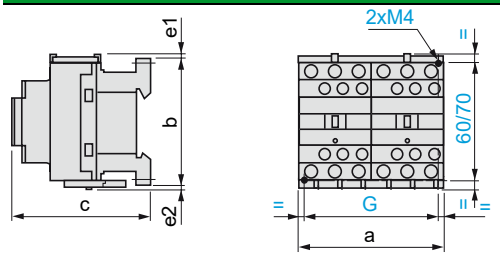

Dimension	Dimensions			
	AC Coil		DC Coil	
	in.	mm	in.	mm
a: Without side-mount accessories	3.54	90	3.54	90
b: Contactor base	3.35	85	3.35	85
c: With cover, without add-on blocks	3.62	92	3.98	101
e1	0.35	9	0.35	9
e2	0.20	5	0.20	5
G: Mounting holes	3.15	80	3.15	80

Table 16.73: TeSys N Size 2, Reversing Contactors [37]

Dimensional Diagram

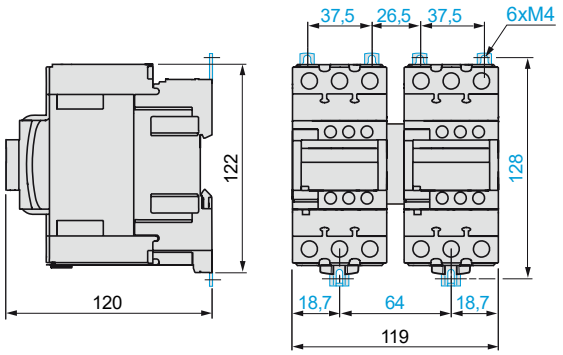

Description	Dimensions	
	AC and DC Coils	
	in.	mm
Width	4.69	119
Height	4.80	122
Depth with cover, without add-on blocks	4.72	120
Load side mounting hole width	2.52	64
Line side mounting hole width	3.40	101.5
Mounting hole height	5.04	128

Table 16.74: TeSys N Size 3–7, Reversing Contactors

Dimensional Diagram

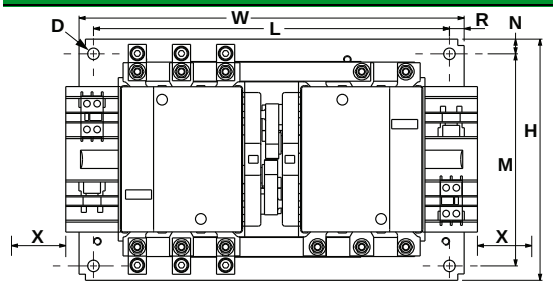

Dimension	Dimensions									
	T02EN23		T02FN23		T02GN23		T02HN23		T02JN23	
	in.	mm	in.	mm	in.	mm	in.	mm	in.	mm
D	0.38	9.7	0.38	9.7	0.56	14.2	0.56	14.2	0.56	14.2
H	7.96	202.2	7.96	202.2	15.27	387.9	15.27	387.9	22.25	565.2
L	11.75	298.5	11.75	298.5	18	457.2	18	457.2	30	762.0
M	7	177.8	7	177.8	14	355.6	14	355.6	19.75	501.7
N	0.49	12.5	0.49	12.5	0.62	15.8	0.62	15.8	1.25	31.8
R	0.49	12.5	0.49	12.5	0.62	15.8	0.62	15.8	0.69	17.5
W	12.71	322.8	12.71	322.8	19.27	489.5	19.27	489.5	31.38	797.0
X	5.16	131.0	5.16	131.0	5.79	147.0	5.91	150.0	7.13	181.0

[37] DIN rail and panel mountable.

© 2019 Schneider Electric
All Rights Reserved
11/20/2019

Courtesy of Steven Engineering, Inc - (800) 258-9200 - sales@steveneng.com - www.stevenengineering.com

TeSys N Starters, Size 00–2

Table 16.75: TeSys N Size 00–2 Dimensions

Non-reversing
T36AN13 / T36BN13 / T36CN13 / T36DN13

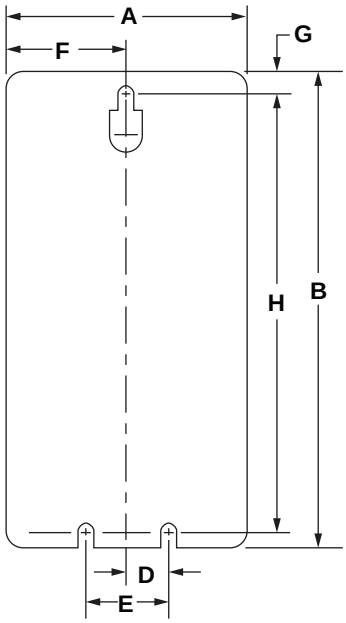

Reversing
T36AN23 / T36BN23 / T36CN23 / T36DN23

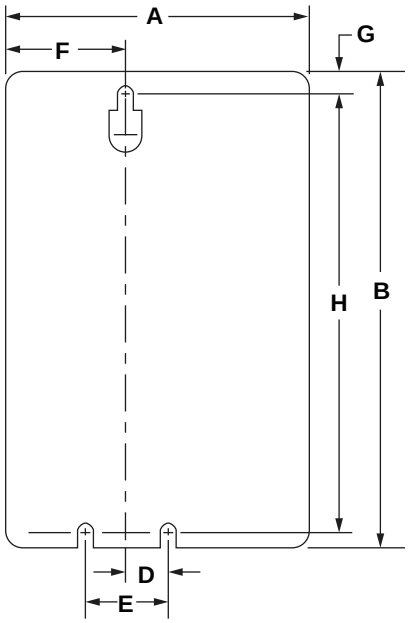

Depth

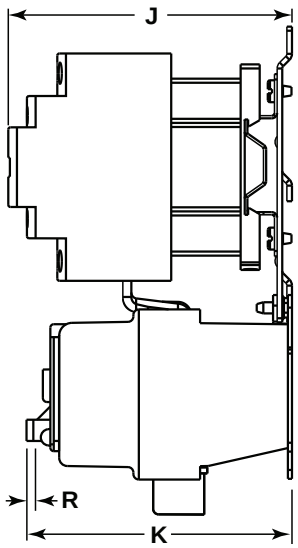

Table 16.76: TeSys N Size 00–2, Non-Reversing and Reversing Starters

Dimension	Non-Reversing								Reversing							
	Size 00 T36AN13		Size 0 T36BN13		Size 1 T36CN13		Size 2 T36DN13		Size 00 T36AN23		Size 0 T36BN23		Size 1 T36CN23		Size 2 T36DN23	
	in.	mm	in.	mm	in.	mm	in.	mm	in.	mm	in.	mm	in.	mm	in.	mm
A	3.19	81.0	3.19	81.0	3.19	81.0	3.19	81.0	43.9	111.5	43.9	111.5	43.9	111.5	5.19	131.8
B	6.64	168.7	6.64	168.7	6.64	168.7	8.61	218.7	6.64	168.7	6.64	168.7	6.64	168.7	8.61	218.7
D	0.5	12.7	0.5	12.7	0.5	12.7	0.5	12.7	0.5	12.7	0.5	12.7	0.5	12.7	0.5	12.7
E	1.0	25.4	1.0	25.4	1.0	25.4	1.0	25.4	1.0	25.4	1.0	25.4	1.0	25.4	1.0	25.4
F	1.59	40.5	1.59	40.5	1.59	40.5	1.59	40.5	1.59	40.5	1.59	40.5	1.59	40.5	1.59	40.5
G	0.20	5.2	0.20	5.2	0.20	5.2	0.20	5.2	0.20	5.2	0.20	5.2	0.20	5.2	0.20	5.2
H	6.16	156.5	6.16	156.5	6.16	156.5	8.22	208.8	6.16	156.5	6.16	156.5	6.16	156.5	8.22	208.8
J (AC Coil)	4.17	105.9	4.17	105.9	4.17	105.9	4.94	125.4	4.17	105.9	4.17	105.9	4.17	104.9	4.94	125.4
J (DC Coil)	4.52	114.9	4.52	114.9	4.52	114.9			4.52	114.9	4.52	114.9	4.52	114.9		
K	3.90	99.0	3.90	99.0	3.90	99.0	3.90	99.0	3.90	99.0	3.90	99.0	3.90	99.0	3.90	99.0
R[38]	0.24	6.1	0.24	6.1	0.24	6.1	0.24	6.1	0.24	6.1	0.24	6.1	0.24	6.1	0.24	6.1

[38] Reset travel.

© 2019 Schneider Electric
All Rights Reserved

Courtesy of Steven Engineering, Inc - (800) 258-9200 - sales@steveneng.com - www.stevenengineering.com

TeSys N Starters, Size 3–4

Table 16.77: TeSys N Size 3–4 Dimensions

Non-Reversing
T36EN13 / T36FN13

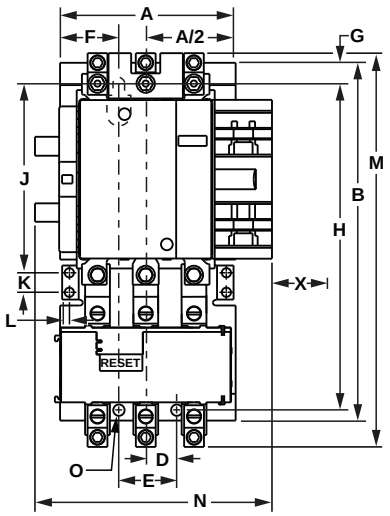

Reversing
T36EN23 / T36FN23

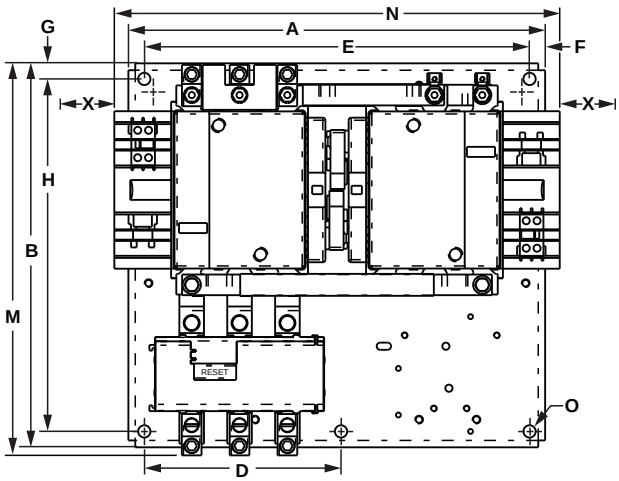

Depth

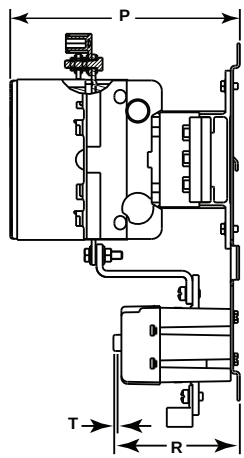

Table 16.78: TeSys N Size 3–4, Non-Reversing and Reversing Starters

Dimension	Non-Reversing				Reversing			
	Size 3 T36EN13		Size 4 T36FN13		Size 3 T36EN23		Size 4 T36FN23	
	in.	mm	in.	mm	in.	mm	in.	mm
A	5.31	134.9	5.31	134.9	12.71	322.8	12.71	322.8
B	10.82	274.8	10.82	274.8	11.71	297.4	11.71	297.4
D	0.88	22.4	0.88	22.4	6.0	152.4	6.0	152.4
E	1.75	44.5	1.75	44.5	11.75	298.5	11.75	298.5
F	1.78	45.0	1.78	45.0	0.48	12.2	0.48	12.2
G	0.32	8.1	0.32	8.1	0.48	12.2	0.48	12.2
H	10.19	258.8	10.19	258.8	10.75	273.1	10.75	273.1
J	6.03	153.2	6.03	153.2	—	—	—	—
K	0.59	15.0	0.59	15.0	—	—	—	—
L	0.22	5.6	0.22	5.6	—	—	—	—
M	11.91	302.4	11.91	302.4	11.96	303.8	11.96	303.8
N	6.57	166.8	6.57	166.8	13.58	344.9	13.58	344.9
O	0.375	9.5	0.375	9.5	0.375	9.5	0.375	9.5
P	6.96	176.7	6.96	176.7	7.18	182.4	7.18	182.4
R	3.8	97	3.8	97	3.8	97	3.8	97
T[39]	0.24	6.1	0.24	6.1	0.24	6.1	0.24	6.1
X[40]	5.16	131.0	5.16	131.0	5.16	131.0	5.16	131.0

[39] Reset travel.
[40] Minimum distance for coil removal.

© 2019 Schneider Electric
All Rights Reserved
11/20/2019

Courtesy of Steven Engineering, Inc - (800) 258-9200 - sales@steveneng.com - www.stevenengineering.com

TeSys N Starters, Size 5–7

Table 16.79: TeSys N Size 5–7 Dimensions

Non-reversing
T36GN13 / T36HN13 / T36JN13

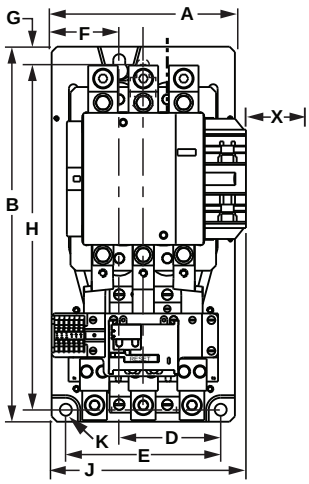

Reversing
T36GN23

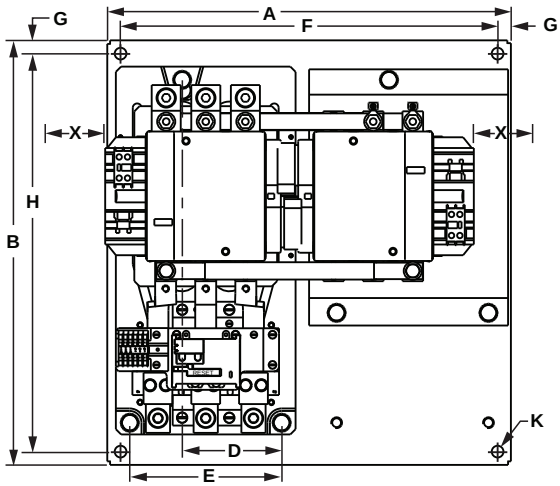

Depth

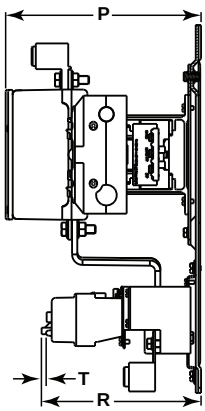

Table 16.80: TeSys N Size 5–7, Non-Reversing and Reversing Starters

Dimension	Non-Reversing						Reversing	
	Size 5 T36GN13		Size 6 T36HN13		Size 7 T36JN13		Size 5 T36GN23	
	in.	mm	in.	mm	in.	mm	in.	mm
A	8.58	217.9	8.58	217.9	8.58	217.9	19.3	489.4
B	17.56	446.0	19.75	501.7	23.58	598.9	20.3	514.8
D	4.75	120.7	4.75	120.7	4.75	120.7	4.75	120.7
E	7.25	184.2	7.25	184.2	7.25	184.2	7.25	184.2
F	3.17	80.4	3.17	80.4	3.17	80.4	18.0	457.2
G	0.63	16.0	0.63	16.0	0.63	16.0	0.63	16.1
H	16.37	415.8	18.56	463.6	22.38	565.9	19.0	482.6
J	9.91	251.6	9.91	251.6	9.91	251.6	—	—
K	0.56	14.2	0.56	14.2	0.56	14.2	0.56	14.2
P	9.32	236.8	9.32	236.8	9.32	236.8	9.95	252.7
R	7.38	187.0	9.16	232.7	8.07	205.0	7.38	187.0
T[41]	0.24	6.1	0.24	6.1	0.24	6.1	0.24	6.1
X[41]	5.79	147 1	5.91	150.1	7.13	181.1	5.79	147.1

[41] Minimum distance for coil removal.

© 2019 Schneider Electric
All Rights Reserved
11/20/2019

Courtesy of Steven Engineering, Inc - (800) 258-9200 - sales@steveneng.com - www.stevenengineering.com

Catalog Numbering

Class 8536 **Type S C G 3 V02** **Form S**

General Classification

8502	Contactor
8536	Starter
8538	Combination Starter with Disconnect Switch
8539	Combination Starter with Circuit Breaker
8702	Reversing Contactor
8736	Reversing Starter
8738	Reversing Combination Starter with Disconnect Switch
8739	Reversing Combination Starter with Circuit Breaker
8810	Two Speed Starter ▲
8903	Type S Lighting Contactors ▲
8940	Pumping Plant Panel ▲
8941	Duplex Controller ▲

▲Consult the Table of Contents for page numbers.

Design

Type S NEMA Contactors and Starters

NEMA Size		Rating (8903 only)	
A	Size 00		
B	Size 0	M	30 A
C	Size 1	P	60 A
D	Size 2	Q	100 A
E	Size 3	V	200 A
F	Size 4	X	300 A
G	Size 5	Y	400 A
H	Size 6	Z	600 A
J	Size 7	J	800 A

Enclosure

A	NEMA 12 Industrial Use
F	NEMA 1 Flush Mounting General Purpose
G	NEMA 1 General Purpose Surface Mounting
H	NEMA 3R Rainproof
O	Open Style Device (no enclosure)
R	NEMA 7 & 9 Hazardous Environments, Spin Top™
T	NEMA 7 & 9 Hazardous Environments, Bolted
W	NEMA 4 Watertight, 4X Corrosion Resistant

Numerals

Used to designate specific physical arrangements, such as the number of poles, fuse clip size, etc.; but the numbering varies with the Class of the equipment. Consult the Digest listings for the specific device numbers.

Voltage Code

AC operated devices without control transformer

Code	Voltage/Frequency
V01	24/60
V02	120/60 or 110/50
V06	480/60 or 440/50
V07	600/60 or 550/50
V08	208/60

V81: 480 V Primary, 120 V Secondary for units using a fused transformer control circuit (Form F4T)

This is only a partial listing. Consult the Digest page for each product for more options.

Common Forms (factory modifications)

A	Start-Stop pushbuttons in the enclosure cover
C	Hand-Off-Auto selector switch in the enclosure cover
E	Bimetallic overload relays
F4T	Fused transformer control circuit (primary fuses only)
FF4T	Fused transformer control circuit (primary & secondary fuses)
H	Solid-state overload relay (SSOLR)
P1	Red ON pilot light in the enclosure cover
P2	Green OFF pilot light in the enclosure cover
S	Separate control circuit
X01	One normally closed auxiliary contact N.C.
X10	One normally open auxiliary contact N.O.

Consult "Factory Modifications (Forms)" for additional Form designations. When more than one Form is applied to a single device, arrange the Forms in alphanumerical order.

Table 16.81: How to Order

To Order Specify:	Catalog Number			
	Class	Type	Voltage Code	Form(s)
• Class Number • Type Number • Voltage Code • Form(s): see page 16-117	8539	SCG44	V06	AH30P1X11

Description: NEMA Size 1 (10 hp) electronic motor circuit protector (MCP) combo starter in a NEMA 1 enclosure with a 480 V coil, start/stop push button (A), trip-class selectable SSOLR (H30), red pilot light (P1), and 1 N.O. and 1 N.C. auxiliary contact (X11).

IMPORTANT: This information is intended for general interpretation of the catalog numbers. Do not use it to create catalog numbers for this product line.

For more ordering information, refer to the Product Selector at www.schneider-electric.com/us/.

NOTE: The terms *Class, Type,* and *Form* do not appear in the catalog number.

Devices are wired from the factory according to customer preference as follows:

- Common control
- Separate control (Form S)
- Control power transformer (CPT)

NOTE: TeSys T devices are unwired.

© 2019 Schneider Electric
All Rights Reserved
11/20/2019

Courtesy of Steven Engineering, Inc - (800) 258-9200 - sales@steveneng.com - www.stevenengineering.com

Type SCO2
Size 1, 3-Pole Contactor

General Information

Class 8502 Type S magnetic contactors are used to switch heating loads, capacitors, transformers, and electric motors where overload protection is provided separately. Class 8502 contactors are available in NEMA Sizes 00–7. Type S contactors are designed for operation up to 600 Vac, 50–60 Hz.

NOTE: In Table 16.82, replace ●●● with the voltage code shown in Table 16.83.

Table 16.82: 3-Pole Polyphase—600 Vac Maximum—50–60 Hz

NEMA Size	Continuous Current Ratings	Motor Voltage	Max. Hp	Open Type	NEMA 1 General Purpose Enclosure	NEMA 4 & 4X Watertight, Dusttight Brushed Stainless Steel Enclosure (Size 0-5) *[1]*
				Type	Type	Type
00	9	200 230 460 575	1.5 1.5 2 2	SAO12●●●	SAG12●●●	Use Size 0
0	18	200 230 460 575	3 3 5 5	SBO2●●●	SBG2●●●	SBW12●●●
1	27	200 230 460 575	7.5 7.5 10 10	SCO2●●●	SCG2●●●	SCW12●●●
2	45	200 230 460 575	10 15 25 25	SDO2●●●	SDG2●●●	SDW12●●●
3	90	200 230 460 575	25 30 50 50	SEO2●●●	SEG2●●●	SEW12●●●
4	135	200 230 460 575	40 50 100 100	SFO2●●●	SFG2●●●	SFW12●●●
5	270	200 230 460 575	75 100 200 200	SGO2●●●	SGG2●●●	SGW12●●●
6	540	200 230 460 575	150 200 400 400	SHO2●●●	SHG2●●●	SHW2●●●
7	810	200 230 460 575	— 300 600 600	SJO2●●●	SJG2●●●	SJW2●●●

Table 16.83: Coil Voltage Codes

Voltage		Code
60 Hz	50 Hz	
24 *[2]*	—	V01
120 *[3]*	110	V02
208	—	V08
240	220	V03
277	—	V04
480	440	V06
600	550	V07
Specify	Specify	V99

NOTE: For voltage codes used with control transformers, see .
Form S (separate control) is used when a separate source of power is available for the control (coil) voltage. Available at no charge.

Dimensions: page 16-39
Factory Modifications (Forms) page 16-117
Separate Enclosures (Class 9991): page 16-110
Replacement Parts (Class 9998): page 16-122
Type S Accessories (Class 9999): page 16-125

For How to Order Information, see page 16-28.

[1] Size 6 and 7 are NEMA 4 only, painted sheet steel enclosures.
[2] 24 V coils are not available on Sizes 4–7. On Sizes 00–3, where 24 V coils are available, **Form S** (separate control) must be specified (for example, order as 8502SBO2V01S).
[3] 120 V polyphase contactors are wired for separate control. **Form S** must be specified (i.e., order as 8502SCO2V02S).

© 2019 Schneider Electric
All Rights Reserved
11/20/2019

Courtesy of Steven Engineering, Inc - (800) 258-9200 - sales@steveneng.com - www.stevenengineering.com

3-Pole Polyphase—NEMA 4X, 7 & 9, and 12/3R

NOTE: In Table 16.84, replace ●●● with the voltage code shown in Table 16.83.

For information on field modification of NEMA 12 enclosures, see page 16-112.

Table 16.84: 3-Pole Polyphase—600 Vac Maximum—50–60 Hz

NEMA Size	Continuous Current Ratings	Motor Voltage	Max. Hp	NEMA 4X Watertight, Dusttight, Corrosion-Resistant Glass-Polyester Enclosure	NEMA 7 & 9 Hazardous Locations Div. 1 & 2 Class I, Groups C & D Class II, Groups E, F, & G			NEMA 12/3R [4] Dusttight & Driptight Industrial Use Enclosure
				Type	Bolted Type		Spin Top™ Type	Type
					Cast Iron [5]	Cast Aluminum[6]		
00	9	200 230 460 575	1-1/2 1-1/2 2 2	Use Size 0	Use Size 0	Use Size 0	Use Size 0	Use Size 0
0	18	200 230 460 575	3 3 5 5	SBW22●●●	SBT2●●●	SBT42●●●	SBR2●●●	SBA2●●●
1	27	200 230 460 575	7-1/2 7-1/2 10 10	SCW22●●●	SCT2●●●	SCT42●●●	SCR2●●●	SCA2●●●
2	45	200 230 460 575	10 15 25 25	SDW22●●●	SDT2●●●	SDT42●●●	SDR2●●●	SDA2●●●
3	90	200 230 460 575	25 30 50 50	SEW22●●●	—	SET42●●●	SER2●●●	SEA2●●●
4	135	200 230 460 575	40 50 100 100	SFW22●●●	—	SFT42●●●	SFR2●●●	SFA2●●●
5	270	200 230 460 575	75 100 200 200	—	—	—	—	SGA2●●●
6	540	200 230 460 575	150 200 400 400	—	—	—	—	SHA2●●●
7	810	200 230 460 575	– 300 600 600	—	—	—	—	SJA2●●●

Auxiliary Units

Auxiliary contacts and power poles can be added in the factory or the field on all Type S starters and contactors. Table 16.85 shows the maximum number of auxiliary units, **in addition to the holding circuit contact,** that can be added to a given size starter or contactor. In addition, it is possible to add a second internal contact on NEMA Size 0, 1, and 2 contactors and starters.

Table 16.85: Auxiliary Units—Class 8502 and 8536

NEMA Size	Type	No. of Poles—Basic Contactor	Maximum Number of External Auxiliary Units (in addition to holding circuit contact)
00	SA	2–3	4 single-circuit auxiliary contacts (N.O. or N.C.) if second internal auxiliary contact is not used.
0–2	SB–SD	1–3	4 single-circuit auxiliary contacts (N.O. or N.C.) [7]
			2 single-circuit auxiliary contacts (N.O. or N.C.) plus 1 power pole adder (1 or 2 poles, N.O. or N.C.)
		4–5	2 single-circuit auxiliary contacts (N.O. or N.C.)
3–4	SE–SF	2–5	3 single-circuit auxiliary contacts (N.O. or N.C.)
5	SG	2–3	2 single-circuit auxiliary contacts (N.O. or N.C.) plus 1 NEMA Size 0–1 or Size 2 power pole adder (1 or 2 poles, N.O. or N.C.)
6–7	SH–SJ	2–3	3 single-circuit auxiliary contacts (N.O. or N.C.)
			2 single-circuit auxiliary contacts (N.O. or N.C.) plus 1 NEMA Size 0–1 or Size 2 power pole adder (1 or 2 poles, N.O. or N.C.)

Dimensions page 16-39
Factory Modifications (Forms) page 16-117
Separate Enclosures (Class 9991) page 16-110
Replacement Parts (Class 9998) page 16-92
Type S Accessories (Class 9999) page 16-125

For How to Order Information, see page 16-28.

[4] NEMA 12 enclosures can be field modified for outdoor non-corrosive and non–service entrance rated applications.
[5] Limited to one pilot light, and a selector switch or Start-Stop push button.
[6] NEMA 7 and 9 bolted cast aluminum are not UL listed.
[7] When adding 4 external auxiliary contacts to one Size 0 or 1 contactor, remove one of the return springs.

© 2019 Schneider Electric
All Rights Reserved
11/20/2019

Courtesy of Steven Engineering, Inc - (800) 258-9200 - sales@steveneng.com - www.stevenengineering.com

Single-Phase, 4- and 5-Pole Polyphase— Open Style or NEMA 1, 4 & 4X Enclosures

NOTE: In Table 16.86, replace ●●● with the voltage code shown in Table 16.83.

Table 16.86: 600 Vac Maximum—50–60 Hz

NEMA Size	Continuous Current Ratings	Motor Voltage	Max. Hp	Open Type	NEMA 1 General Purpose Enclosure	NEMA 4 & 4X –Watertight, Dusttight, Brushed Stainless Steel Enclosure (Size 0-5)[8]
				Type	Type	Type
1-Pole Single Phase						
0	18	115 230	1 2	SBO5●●●	SBG5●●●	SBW15●●●
1	27	115 230	2 3	SCO5●●●	SCG5●●●	SCW15●●●
2-Pole Single Phase						
00	9	115 230	1/3 1	SAO11●●●	SAG11●●●	Use Size 0
0	18	115 230	1 2	SBO1●●●	SBG1●●●	SBW11●●●
1	27	115 230	2 3	SCO1●●●	SCG1●●●	SCW11●●●
2	45	115 230	3 7-1/2	SDO1●●●	SDG1●●●	SDW11●●●
3	90	— —	— —	SEO1●●●	SEG1●●●	SEW11●●●
4	135	—	—	SFO1●●●	SFG1●●●	SFW11●●●
5	270	—	—	SGO1●●●	SGG1●●●	SGW11●●●
6	540	—	—	SHO1●●●	SHG1●●●	SHW1●●●
7	810	—	—	SJO1●●●	SJG1●●●	SJW1●●●
4-Pole Polyphase						
0	18	200 230 460 575	3 3 5 5	SBO3●●●	SBG3●●●	SBW13●●●
1	27	200 230 460 575	7-1/2 7-1/2 10 10	SCO3●●●	SCG3●●●	SCW13●●●
2	45	200 230 460 575	10 15 25 25	SDO3●●●	SDG3●●●	SDW13●●●
3	90	200 230 460 575	25 30 50 50	SEO3●●●	SEG3●●●	SEW13●●●
4	135	200 230 460 575	40 50 100 100	SFO3●●●	SFG3●●●	SFW13●●●
5-Pole Polyphase						
0	18	200 230 460 575	3 3 5 5	SBO4●●●	SBG4●●●	SBW14●●●
1	27	200 230 460 575	7-1/2 7-1/2 10 10	SCO4●●●	SCG4●●●	SCW14●●●
2	45	200 230 460 575	10 15 25 25	SDO4●●●	SDG4●●●	SDW14●●●
3	90	200 230 460 575	25 30 50 50	SEO4●●●	SEG4●●●	SEW14●●●
4	135	200 230 460 575	40 50 100 100	SFO4●●●	SFG4●●●	SFW14●●●

Dimensions: page 16-39
Factory Modifications (Forms): page 16-117
Separate Enclosures (Class 9991): page 16-110
Replacement Parts (Class 9998): page 16-92
Type S Accessories (Class 9999): page 16-125

For How to Order Information, see page 16-28.

[8] Size 6 and 7 are NEMA 4 only, painted sheet steel enclosures.

© 2019 Schneider Electric
All Rights Reserved
11/20/2019

Courtesy of Steven Engineering, Inc - (800) 258-9200 - sales@steveneng.com - www.stevenengineering.com

Single-Phase and 4- and 5-Pole Polyphase— NEMA 4X, 7 & 9, and 12/3R Enclosures

NOTE: In Table 16.87, replace ●●● with the voltage code shown in Table 16.83.

For information on field modification of NEMA 12 enclosures, see page 16-112.

Table 16.87: 600 Vac Maximum—50–60 Hz

NEMA Size	Continuous Current Ratings	Motor Voltage	Max. Hp	NEMA 4X Watertight, Dusttight Corrosion-Resistant Glass-Polyester Enclosure	NEMA 7 & 9, Div. 1 & 2 Hazardous Locations Class I, Groups C & D Class II, Groups E, F & G			NEMA 12/3R [9] Dusttight & Driptight Industrial Use Enclosure
				Type	Bolted Type		Spin Top™ Type	Type
					Cast Iron [10]	Cast Aluminum[11]		
1-Pole Single Phase								
0	18	115 230	1 2	— —	SBT5●●●	SBT45●●●	SBR5●●●	SBA5●●●
1	27	115 230	2 3	— —	SCT5●●●	SCT45●●●	SCR5●●●	SCA5●●●
2-Pole Single Phase								
00	9	115 230	1/3 1	Use Size 0	Use Size 0		Use Size 0	Use Size 0
0	18	115 230	1 2	SBW21●●●	SBT1●●●	SBT41●●●	SBR1●●●	SBA1●●●
1	27	115 230	2 3	SCW21●●●	SCT1●●●	SCT41●●●	SCR1●●●	SCA1●●●
2	45	115 230	3 7-1/2	SDW21●●●	SDT1●●●	SDT41●●●	SDR1●●●	SDA1●●●
3	90	—	—	Consult the Customer Care Center at 1-888-778-2733.	—	SET41●●●	SER1●●●	SEA1●●●
4	135	—	—		—	SFT41●●●	SFR1●●●	SFA1●●●
5	270	—	—	—	—	—	—	SGA1●●●
6	540	—	—	—	—	—	—	SHA1●●●
7	810	—	—	—	—	—	—	SJA1●●●
4-Pole Polyphase								
0	18	200 230 460 575	3 3 5 5	SBW23●●●	SBT3●●●	Consult the Customer Care Center at 1-888-778-2733.	SBR3●●●	SBA3●●●
1	27	200 230 460 575	7-1/2 7-1/2 10 19	SCW23●●●	SCT3●●●		SCR3●●●	SCA3●●●
2	45	200 230 460 575	10 15 25 25	SDW23●●●	SDT3●●●		SDR3●●●	SDA3●●●
3	90	200 230 460 575	25 30 50 50	Consult the Customer Care Center at 1-888-778-2733.			SER3●●●	SEA3●●●
4	135	200 230 460 575	40 50 100 100				SFR3●●●	SFA3●●●
5-Pole Polyphase								
0	18	200 230 460 575	3 3 5 5	Consult the Customer Care Center at 1-888-778-2733.	—	—	—	SBA4●●●
1	27	200 230 460 575	7-1/2 7-1/2 10 10		—	—	—	SCA4●●●
2	45	200 230 460 575	10 15 25 25		—	—	—	SDA4●●●
3	90	200 230 460 575	25 30 50 50		—	—	—	SEA4●●●
4	135	200 230 460 575	40 50 100 100		—	—	—	SFA4●●●

Coil voltage codes and page number reference for additional information are shown on page 16-29.

For How to Order Information, see page 16-28.

[9] NEMA 12 enclosures can be field modified for outdoor non-corrosive and non–service entrance rated applications.
[10] Limited to one pilot light, and a selector switch or Start-Stop push button.
[11] NEMA 7 and 9 bolted cast aluminum are not UL listed.

© 2019 Schneider Electric
All Rights Reserved
11/20/2019

Courtesy of Steven Engineering, Inc - (800) 258-9200 - sales@steveneng.com - www.stevenengineering.com

Type SCO3...H30
Size 1, Three-Pole Starter with Motor Logic™ SSOLR

3or5 Days
Laser Delivery

Schneider Electric offers express shipping for factory modified NEMA Type 1 and Type 12/3R Enclosed Starters. When you need them fast, our Laser™ Delivery program is the answer to getting your product when you need it most. Ask for Laser™ Delivery, then select the product and the modifications you need when you place your order. It's as easy as that!

General Information

Type S magnetic starters are used for full-voltage starting and stopping of AC squirrel cage motors. Motor overload protection for three-phase starter applications can be provided through one of four options, as follows:

- **Solid-State Overload Relay Protection (Motor Logic™ SSOLR)**
  These ambient insensitive overload relays are available on Sizes 00 through 6 and standard on size 7. They provide phase loss and phase unbalance protection. To order, add Form **H30** (for selectable trip class 10 or 20 protection). For more information about Motor Logic SSOLRs, see page 16-101 and page 16-119. (Catalog no. example: 8536SCO3V06H30)

- **Adapted Bimetallic or Solid-State Overload Relay (NEMA Sizes 00–1)**
  The Adapted Bimetallic or Solid-State relay option includes a specially designed adapter that attaches with bus bars to the Type S NEMA contactor. This adapter allows direct mounting of the IEC Style bimetallic (LRD or LR3D) or solid-state (LR9D) overload relay. To order this starter configuration, add **Form E** (adapter only) to the standard catalog number. The LRD, LR3D, or LR9D overload relay must be purchased separately, based on the FLA of the motor, and installed in the field to properly operate the starter. For the Adapted Bimetallic device only, if the FLA is known at the time of purchase, you can order the starter with the overload relay installed. For more information and a list of options, see Adapted Bimetallic Overload Relay Forms, page 16-119. (Catalog no. example: 8536SCO3V06E—without overload relay).

- **TeSys T Motor Management System (NEMA Sizes 1–6)**
  TeSys T is a flexible system that integrates seamlessly into your automation system through five major communication protocols. TeSys T can predict what will happen in the process, as it accurately monitors current, voltage, and power over a wide range. For additional information about TeSys T Motor Management System, see page 16-103 and page 16-120. NOTE: The full catalog number contains a four-character Form number (for example, 8536SCO3V06**H616**).

- **Melting Alloy Type Thermal Overload Relays (NEMA Sizes 00–6)**
  Melting alloy type thermal overload relays utilize the use of replaceble thermal units. These thermal units must be ordered separately and installed to operate the starter. Thermal unit selection begins on page 16-132. The catalog number includes no Form number (for example, 8536SCO3V06).

3-Pole Polyphase—NEMA 1, 4 & 4X

NOTE: In Table 16.88, replace ●●● with the voltage code shown in .

Table 16.88: 3-Pole Polyphase—600 Vac Maximum—50–60 Hz, with Motor Logic SSOLR*[12]*

NEMA Size	Continuous Current Ratings	Motor Voltage	Max. Hp	Open Type	NEMA 1 General Purpose Enclosure	NEMA 4 & 4X Watertight, Dusttight Brushed Stainless Steel Enclosure (Size 0-5)*[13]*	NEMA 4X Watertight, Dusttight, Corrosion-Resistant Glass-Polyester Enclosure
				Type	Type	Type	Type
00	9	200 230 460 575	1.5 1.5 2 2	SAO12●●●H30 *[14]*	SAG12●●●H30 *[14]*	Use Size 0	Use Size 0
0	18	200 230 460 575	3 3 5 5	SBO2●●●H30 *[14]*	SBG2●●●H30 *[14]*	SBW12●●●H30 *[14]*	SBW22●●●H30 *[14]*
1	27	200 230 460 575	7.5 7.5 10 10	SCO3●●●H30 *[14]*	SCG3●●●H30 *[14]*	SCW13●●●H30 *[14]*	SCW23●●●H30 *[14]*
2	45	200 230 460 575	10 15 25 25	SDO1●●●H30 *[14]*	SDG1●●●H30 *[14]*	SDW11●●●H30 *[14]*	SDW21●●●H30 *[14]*
3	90	200 230 460 575	25 30 50 50	SEO1●●●H30	SEG1●●●H30	SEW11●●●H30	SEW21●●●H30
4	135	200 230 460 575	40 50 100 100	SFO1●●●H30	SFG1●●●H30	SFW11●●●H30	SFW21●●●H30
5	270	200 230 460 575	75 100 200 200	SGO1●●●H30	SGG1●●●H30	SGW11●●●H30	—
6	540	200 230 460 575	150 200 400 400	SHO2●●●H30	SHG2●●●H30	SHW2●●●H30	—
7	810	200 230 460 575	— 300 600 600	SJO2●●●H30	SJG2●●●H30	SJW2●●●H30	—

[12] To order melting alloy overload relay, remove form "H30" from part number.
[13] Size 6 and 7 are NEMA 4 only, painted sheet steel enclosures.
[14] **Form H30**, with the possibility of a fourth character to select a lower FLA range (for example, **H308**). See "Solid-State Overload Relay Forms" on page 16-119

© 2019 Schneider Electric
All Rights Reserved
11/20/2019

Courtesy of Steven Engineering, Inc - (800) 258-9200 - sales@steveneng.com - www.stevenengineering.com

3-Pole Polyphase—NEMA 7 & 9 and 12/3R

NOTE: In Table 16.89, replace ●●● with the voltage code shown in .

For information on field modification of NEMA 12 enclosures, see page 16-112.

For Form H30• (special lower-FLA factory-assembled starter combinations with Motor Logic SSOLR protection), see Solid-State Overload Relay Forms, page 16-119.

Table 16.89: 3-Pole Polyphase—600 Vac Maximum—50–60 Hz *[15]*

NEMA Size	Continuous Current Ratings	Motor Voltage	Max. Hp	NEMA 7 & 9 For Hazardous Locations Div. 1 & 2 Class I–Groups C, D Class II–Groups E, F, & G			NEMA 12/3R *[16]* Dusttight & Driptight Industrial Use Enclosure
				Bolted Type		Spin Top™ Type	Type
				Cast Iron *[17]*	Cast Aluminum *[18]*		
00	9	200 230 460 575	1.5 1.5 2 2	Use Size 0		Use Size 0	Use Size 0
0	18	200 230 460 575	3 3 5 5	SBT2●●●H30 *[19]*	SBT42●●●H30 *[19]*	SBR2●●●H30 *[19]*	SBA2●●●H30 *[19]*
1	27	200 230 460 575	7.5 7.5 10 10	SCT3●●●H30 *[19]*	SCT43●●●H30 *[19]*	SCR3●●●H30 *[19]*	SCA3●●●H30 *[19]*
2	45	200 230 460 575	10 15 25 25	SDT1●●●H30 *[19]*	SDT41●●●H30 *[19]*	SDR1●●●H30 *[19]*	SDA1●●●H30 *[19]*
3	90	200 230 460 575	25 30 50 50	—	SET43●●●H30	SER3●●●H30	SEA1●●●H30
4	135	200 230 460 575	40 50 100 100	—	SFT41●●●H30	SFR1●●●H30	SFA1●●●H30
5	270	200 230 460 575	75 100 200 200	—	—	—	SGA1●●●H30
6	540	200 230 460 575	150 200 400 400	—	—	—	SHA2●●●H30
7	810	200 230 460 575	– 300 600 600	—	—	—	SJA2●●●H30

3 or 5 Days Laser Delivery

Schneider Electric offers express shipping for factory modified NEMA Type 1 and Type 12/3R Enclosed Starters. When you need them fast, our Laser™ Delivery program is the answer to getting your product when you need it most. Ask for Laser™ Delivery, then select the product and the modifications you need when you place your order. It's as easy as that!

Table 16.90: Coil Voltage Codes

Voltage		Code
60 Hz	50 Hz	
24 *[20]*	—	V01
120 *[21]*	110	V02
208	—	V08
240	220	V03
277	—	V04
480	440	V06
600	550	V07
Specify	Specify	V99

NOTE: For voltage codes used with control transformers, see page 16-118.
Form S (separate control) is used when a separate source of power is available for the control (coil) voltage.

Dimensions: page 16-39
Factory Modifications (Forms): page 16-117
Separate Enclosures (Class 9991): page 16-110
Replacement Parts (Class 9998): page 16-122
Type S Accessories (Class 9999): page 16-125

For How to Order Information, see page 16-28.

[15] To order melting alloy overload relay, remove form "H30" from part number.
[16] NEMA 12 enclosures can be field modified for outdoor non-corrosive and non–service entrance rated applications.
[17] Limited to one pilot light, and a selector switch or Start-Stop push button.
[18] NEMA 7 and 9 bolted cast aluminum are not UL listed.
[19] **Form H30**, with the possibility of a fourth character to select a lower FLA range (for example, **H308**). See "Solid-State Overload Relay Forms" on page 16-119
[20] 24 V coils are not available on Sizes 4–7. On Sizes 00-3, where 24 V coils are available, **Form S** (separate control) must be specified (i.e., order as 8536SBO2V01S).
[21] 120 V Polyphase contactors are wired for separate control. **Form S** (separate control) must be specified (i.e., order as 8536SCO2V02S).

© 2019 Schneider Electric
All Rights Reserved
11/20/2019

Courtesy of Steven Engineering, Inc - (800) 258-9200 - sales@steveneng.com - www.stevenengineering.com

2-Pole Single Phase—Open or NEMA 1, 4, and 4X

NOTE: In Table 16.91, replace ●●● with the voltage code shown in .

For melting alloy thermal units, see page 16-132.

Table 16.91: 2-Pole Single Phase—600 Vac Maximum—50–60 Hz (require 1 melting alloy thermal unit)

NEMA Size	Continuous Current Ratings	Motor Voltage	Max. Hp	Open Type	NEMA 1 General Purpose Enclosure	NEMA 4 & 4X Watertight, Dusttight Brushed Stainless Steel Enclosure	NEMA 4X Watertight, Dusttight, Corrosion-Resistant Glass-Polyester Enclosure
				Type	Type	Type	Type
00	9	115 230	1/3 1	SAO11●●●	SAG11●●●	Use Size 0	Use Size 0
0	18	115 230	1 2	SBO1●●●	SBG1●●●	SBW11●●●	SBW21●●●
1	27	115 230	2 3	SCO1●●●	SCG1●●●	SCW11●●●	SCW21●●●
1P	36	115 230	3 5	SCO2●●●	SCG2●●●	SCW12●●●	SCW22●●●
2	45	115 230	3 7-1/2	SDO6●●●	SDG6●●●	SDW16●●●	SDW26●●●

4-Pole, 2-Phase—Open and NEMA 1, 4, and 4X

NOTE: In Table 16.92, replace ●●● with the voltage code shown in .

For melting alloy thermal units, see page 16-132.

Table 16.92: 4-Pole, 2-Phase—600 Vac Maximum—50–60 Hz (require 2 melting alloy thermal units)

NEMA Size	Continuous Current Ratings	Motor Voltage	Max. Hp	Open Type	NEMA 1 General Purpose Enclosure	NEMA 4 & 4X Watertight, Dusttight Brushed Stainless Steel Enclosure	NEMA 4X Watertight, Dusttight, Corrosion-Resistant Glass-Polyester Enclosure
				Type	Type	Type	Type
0	18	200 230 460 575	3 3 5 5	SBO3●●●	SBG3●●●	SBW13●●●	SBW23●●●
1	27	200 230 460 575	7-1/2 7-1/2 10 10	SCO4●●●	SCG4●●●	SCW14●●●	SCW24●●●
2	45	200 230 460 575	10 15 25 25	SDO2●●●	SDG2●●●	SDW12●●●	SDW22●●●
3	90	200 230 460 575	25 30 50 50	SEO2●●●	SEG2●●●	SEW12●●●	Consult the Customer Care Center at (1-888-778-2733)
4	135	200 230 460 575	40 50 100 100	SFO2●●●	SFG2●●●	SFW12●●●	

Table 16.93: Coil Voltage Codes

Voltage		Code
60 Hz	50 Hz	
24 *[22]*	—	V01
120 *[23]*	110	V02
208	—	V08
240	220	V03
277	—	V04
480	440	V06
600	550	V07
Specify	Specify	V99

NOTE: For voltage codes used with control transformers, see page 16-118.
Form S (separate control) is used when a separate source of power is available for the control (coil) voltage. Form S is provided at no charge.

Dimensions: page 16-39
Factory Modifications (Forms): page 16-117
Separate Enclosures (Class 9991): page 16-110
Replacement Parts (Class 9998): page 16-122
Type S Accessories (Class 9999) page 16-125

For How to Order Information, see page 16-28.

[22] 24 V coils are not available on Sizes 4–7. On sizes 00–3, where 24 V coils are available, **Form S** (separate control) must be specified (i.e., order as 8536SBO2V01S).
[23] 120 V polyphase starters are wired for separate control. **Form S** (separate control) must be specified (for example, order as 8536SCO2V02S).

© 2019 Schneider Electric
All Rights Reserved
11/20/2019

Courtesy of Steven Engineering, Inc - (800) 258-9200 - sales@steveneng.com - www.stevenengineering.com

2-Pole Single Phase—NEMA 7 & 9 and 12/3R

NOTE: In Table 16.94, replace ●●● with the voltage code shown in .

For melting alloy thermal units, see page 16-132.

For information on field modification of NEMA 12 enclosures, see page 16-112.

Table 16.94: 2-Pole Single Phase—600 Vac Maximum—50–60 Hz (require 1 melting alloy thermal unit)

NEMA Size	Continuous Current Ratings	Motor Voltage	Max. Hp	NEMA 7 & 9 Hazardous Locations, Div. 1 & 2 Class I, Groups C & D Class II, Groups E, F, & G			NEMA 12/3R *[24]* Dusttight & Driptight Industrial Use Enclosure
				Bolted Type		Spin Top™ Type	Type
				Cast Iron *[25]*	Cast Aluminum *[26]*		
00	9	115 230	1/3 1	Use Size 0		Use Size 0	Use Size 0
0	18	115 230	1 2	SBT1●●●	SBT41	SBR1●●●	SBA1●●●
1	27	115 230	2 3	SCT1●●●	SCT41	SCR1●●●	SCA1●●●
1P	36	115 230	3 5	SCT2●●●	SCT42	SCR2●●●	SCA2●●●
2	45	115 230	3 7-1/2	SDT6●●●	SDT46	SDR6●●●	SDA6●●●

4-Pole, 2-Phase—NEMA 7 & 9 and 12/3R

NOTE: In Table 16.95, replace ●●● with the voltage code shown in .

For melting alloy thermal units, see page 16-132.

For information on field modification of NEMA 12 enclosures, see page 16-112.

Table 16.95: 4-Pole 2-Phase—600 Vac Maximum—50–60 Hz (require 2 melting alloy thermal units)

NEMA Size	Continuous Current Ratings	Motor Voltage	Max. Hp	Coil Voltage	NEMA 7 & 9 Hazardous Locations Class I, Groups C & D Class II, Groups E, F, & G			NEMA 12/3R *[24]* Dusttight & Driptight Industrial Use Enclosure
					Bolted Type		Spin Top™ Type	Type
					Cast Iron *[25]*	Cast Aluminum		
0	18	200 230 460 575	3 3 5 5	208 240 480 600	SBT3●●●	Consult the Customer Care Center at 1-888-778-2733	SBR3●●●	SBA3●●●
1	27	200 230 460 575	7-1/2 7-1/2 10 10	208 240 480 600	SCT4●●●		SCR4●●●	SCA4●●●
2	45	200 230 460 575	10 15 25 25	208 240 480 600	SDT2●●●		SDR2●●●	SDA2●●●
3	90	200 230 460 575	25 30 50 50	208 240 480 600	Consult the Customer Care Center at 1-888-778-2733		SER2●●●	SEA2●●●
4	135	200 230 460 575	40 50 100 100	208 240 480 600			—	SFA2●●●

Dimensions: page 16-39
Factory Modifications (Forms): page 16-117
Separate Enclosures (Class 9991): page 16-110
Replacement Parts (Class 9998): page 16-122
Type S Accessories (Class 9999): page 16-125

For How to Order Information, see page 16-28.

[24] NEMA 12 enclosures can be field modified for outdoor non-corrosive and non–service entrance rated applications.
[25] Limited to one pilot light, and a selector switch or Start-Stop push button.
[26] NEMA 7 and 9 bolted cast aluminum are not UL listed.

© 2019 Schneider Electric
All Rights Reserved
11/20/2019

Courtesy of Steven Engineering, Inc - (800) 258-9200 - sales@steveneng.com - www.stevenengineering.com

Types SB–SD With Auxiliary Load Terminals

Capacitors are sometimes used in motor branch circuits to improve power factor. The Size 0–2 Type SB–SD starters listed in Table 16.96 include three auxiliary terminals to allow easy connection of power factor correction capacitors. When capacitors are connected using these terminals, no adjustment to the selection of thermal units is necessary. The auxiliary terminals accept 12–16 AWG solid or stranded wire. NEMA Size 3 and 4 starters have provisions for auxiliary connections. User must supply lugs as necessary.

The Type S starters with auxiliary load terminals may also be used to control two motors simultaneously from a single starter. However, this application is tightly restricted by Section 430-53 of the National Electrical Code. Refer to the NEC for restrictions regarding overload protection, size of controller and motor branch circuit protection.

NOTE: In Table 16.96, replace ●●● with the voltage code shown in .

For melting alloy thermal units, see page 16-132.

Table 16.96: 3-Pole Polyphase—600 Vac Maximum—50–60 Hz (devices require 3 melting alloy thermal units)

NEMA Size	Motor Voltage	Max. Hp	Open Style Type
0	200 230 460 575	3 3 5 5	SBTO2●●●
1	200 230 460 575	7-1/2 7-1/2 10 10	SCTO3●●●
2	200 230 460 575	10 15 25 25	SDTO1●●●

Extra Capacity Single Phase Starters (Not NEMA Style)

NOTE: In Table 16.97, replace ●●● with the voltage code shown in .

For melting alloy thermal units, see page 16-132.

For information on field modification of NEMA 12 enclosures, see page 16-112.

Table 16.97: 2-Pole Single Phase—250 Vac Maximum—50–60 Hz (require 1 melting alloy thermal unit)

Motor Voltage	Max. Hp	Open Style	NEMA 1 General Purpose Enclosure	NEMA 3R Rainproof, Sleet Resistant, Outdoor Use Enclosure	NEMA 4 & 4X Watertight, Dusttight Brushed Stainless Steel Enclosure	NEMA 4X Watertight Corrosion Resistant Glass-Polyester Enclosure	NEMA 12/3R *[27]* Dusttight and Driptight Industrial Use Enclosure
		Type	Type	Type	Type	Type	Type
115 230	5 10	SDO8●●● *[28]*	—	SDH8●●● *[28]*	—	—	—
115 230	7-1/2 15	SEO6●●●	SEG6●●●	SEH6●●●	SEW16●●●	SEW26●●●	SEA6●●●

Table 16.98: Coil Voltage Codes

Voltage		Code
60 Hz	50 Hz	
24 *[29]*	—	V01
120 *[30]*	110	V02
208	—	V08
240	220	V03
277	—	V04
480	440	V06
600	550	V07
Specify	Specify	V99

NOTE: For voltage codes used with control transformers, see page 16-118. Form S (separate control) is used when a separate source of power is available for the control (coil) voltage. Form S is supplied at no charge.

Dimensions: page 16-39
Factory Modifications (Forms): page 16-117
Separate Enclosures (Class 9991): page 16-110
Replacement Parts (Class 9998): page 16-122
Type S Accessories (Class 9999): page 16-125

For How to Order Information, see page 16-28.

[27] NEMA 12 enclosures can be field modified for outdoor non-corrosive and non–service entrance rated applications.
[28] Uses a Size 3 overload relay.
[29] 24 V coils are not available on Sizes 4–7. On Sizes 00–3, where 24 V coils are available, **Form S** (separate control) must be specified.
[30] 120 Volt Polyphase starters are wired for separate control and must be ordered with Form S (i.e., 8536SCO2V02S).

© 2019 Schneider Electric
All Rights Reserved
11/20/2019

Courtesy of Steven Engineering, Inc - (800) 258-9200 - sales@steveneng.com - www.stevenengineering.com

Application Data for Selection

Table 16.99: Application Data per NEMA Standards ICS-1 and ICS-2

NEMA Size	Load Voltage	Max. Hp Rating: Nonplugging and Nonjogging Duty		Max. Hp Rating: Plugging and Jogging Duty *[31]*		Continuous Current Rating (A) 600 V Max.	Service-Limit Current Rating (A) *[32]*	Tungsten and Infrared Lamp Load (A), 250 V Max. *[33]*	Resistance Heating Loads (KW) other than Infrared Lamp Loads *[34]*		KVA Rating for Switching Transformer Primaries at 50 or 60 Cycles — Inrush Currents (Worst Case Peak)				3 Ø Rating for Switching Capacitors *[35]*
											≤20 Times Peak of Continuous Current Rating		>20 to 40 Times Peak of Continuous Current Rating		
		Single Phase	Poly-phase	Single Phase	Poly-phase				Single Phase	Poly-phase	Single Phase	Poly-phase	Single Phase	Poly-phase	KVAR
00	115	0.5	—	—	—	9	11	5	—	—	—	—	—	—	—
	200	—	1.5	—	—	9	11	5	—	—	—	—	—	—	—
	230	1	1.5	—	—	9	11	5	—	—	—	—	—	—	—
	380	—	1.5	—	—	9	11	—	—	—	—	—	—	—	—
	460	—	2	—	—	9	11	—	—	—	—	—	—	—	—
	575	—	2	—	—	9	11	—	—	—	—	—	—	—	—
0	115	1	—	0.5	—	18	21	10	—	—	0.6	—	0.3	—	—
	200	—	3	—	1.5	18	21	10	—	—	—	1.8	—	0.9	—
	230	2	3	1	1.5	18	21	10	—	—	1.2	2.1	0.6	1.0	—
	380	—	5	—	1.5	18	21	—	—	—	—	—	—	—	—
	460	—	5	—	2	18	21	—	—	—	2.4	4.2	1.2	2.1	—
	575	—	5	—	2	18	21	—	—	—	3.0	5.2	1.5	2.6	—
1	115	2	—	1	—	27	32	15	3	5	1.2	—	0.6	—	—
	200	—	7.5	—	3	27	32	15	—	9.1	—	3.6	—	1.8	—
	230	3	7.5	2	3	27	32	15	6	10	2.4	4.3	1.2	2.1	—
	380	—	10	—	5	27	32	—	—	16.5	—	—	—	—	—
	460	—	10	—	5	27	32	—	12	20	4.9	8.5	2.5	4.3	—
	575	—	10	—	5	27	32	—	15	25	6.2	11.0	3.1	5.3	—
1P	115	3	—	1.5	—	36	42	24	—	—	—	—	—	—	—
	230	5	—	3	—	36	42	24	—	—	—	—	—	—	—
2	115	3	—	2	—	45	52	30	5	8.5	2.1	—	1.0	—	—
	200	—	10	—	7.5	45	52	30	—	15.4	—	6.3	—	3.1	—
	230	7.5	15	5	10	45	52	30	10	17	4.1	7.2	2.1	3.6	8
	380	—	25	—	15	45	52	—	—	28	—	—	—	—	—
	460	—	25	—	15	45	52	—	20	34	8.3	14	4.2	7.2	16
	575	—	25	—	15	45	52	—	25	43	10.0	18	5.2	8.9	20
3	115	—	—	—	—	90	104	60	10	17	4.1	—	2.0	—	—
	200	—	25	—	15	90	104	60	—	31	—	12	—	6.1	—
	230	—	30	—	20	90	104	60	20	34	8.1	14	4.1	7.0	27
	380	—	50	—	30	90	104	—	—	56	—	—	—	—	—
	460	—	50	—	30	90	104	—	40	68	16	28	8.1	14	53
	575	—	50	—	30	90	104	—	50	86	20	35	10	18	67
4	200	—	40	—	25	135	156	120	—	45	—	20	—	10	—
	230	—	50	—	30	135	156	120	30	52	14	23	6.8	12	40
	380	—	75	—	50	135	156	—	—	86.7	—	—	—	—	—
	460	—	100	—	60	135	156	—	60	105	27	47	14	23	80
	575	—	100	—	60	135	156	—	75	130	34	59	17	29	100
5 *[36]*	200	—	75	—	60	270	311	240	—	91	—	41	—	20	—
	230	—	100	—	75	270	311	240	60	105	27	47	14	24	80
	380	—	150	—	125	270	311	—	—	173	—	—	—	—	—
	460	—	200	—	150	270	311	—	120	210	54	94	27	47	160
	575	—	200	—	150	270	311	—	150	260	68	117	34	59	200
6 *[36]*	200	—	150	—	125	540	621	480	—	182	—	81	—	41	—
	230	—	200	—	150	540	621	480	120	210	54	94	27	47	160
	380	—	300	—	250	540	621	—	—	342	—	—	—	—	—
	460	—	400	—	300	540	621	—	240	415	108	188	54	94	320
	575	—	400	—	300	540	621	—	300	515	135	234	68	117	400
7 *[36]*	230	—	300	—	—	810	932	—	180	315	—	—	—	—	240
	460	—	600	—	—	810	932	—	360	625	—	—	—	—	480
	575	—	600	—	—	810	932	—	450	775	—	—	—	—	600

Table 16.100: Maximum Allowable Motor Code Letter

Motor Hp Rating	Maximum Allowable Motor Code Letter
1.5–2	L
3–5	K
7.5 and above	H

The motor ratings in Table 16.99 are NEMA standard ratings and apply only when the code letter of the motor is the same as or occurs earlier in the alphabet than what is shown in Table 16.100. Motors with code letters occurring later in the alphabet may require a larger controller. Consult the Customer Care Center at 1-888-778-2733.

The ratings for capacitor switching in Table 16.99 assume the following maximum available fault currents (rms symmetrical amperes):

- NEMA Size 00–3: 5,000 A
- NEMA Size 4–5: 10,000 A
- NEMA Size 6: 18,000 A
- NEMA Size 7: 30,000 A

If the available fault current is greater than these values, connect sufficient impedance in series.

Refer to the instruction material for the actual tested SCCR values.

NOTE: Tables and footnotes are taken from NEMA Standards.

[31] Ratings shown are for applications requiring repeated interruptions of stalled motor current or repeated closing of high transient currents encountered in rapid motor reversal, involving more than five openings or closings per minute and more than ten in a ten-minute period, such as plug-stop, plug-reverse or jogging duty. Ratings apply to single speed and multi-speed controllers.

[32] Per NEMA Standards paragraph ICS 2-321.20, the service-limit current represents the maximum rms current, in Amperes, which the controller may be expected to carry for protracted periods in normal service. At service-limit current ratings, temperature rises may exceed those obtained by testing the controller at its continuous current rating. The ultimate trip current of over-current (overload) relays or other motor protective devices shall not exceed the service-limit current ratings of the controller.

[33] **Fluorescent Lamp Loads—300 V and Less—**The characteristics of fluorescent lamps are such that it is not necessary to derate Class 8502 contactors below their normal continuous current rating. Class 8903 contactors may also be used with fluorescent lamp loads. For controlling tungsten and infrared lamp loads, and resistance heating loads, Class 8903 AC lighting contactors are recommended. These contactors are specifically designed for such loads and are applied at their full rating as listed in the Class 8903 (lighting contactors) section.

[34] Ratings apply to contactors which are employed to switch the load at the utilization voltage of the heat producing element with a duty which requires continuous operation of not more than five openings per minute. Class 8903 Types L and S lighting contactors are rated for resistance heating loads.

[35] When discharged, a capacitor has essentially zero impedance. For repetitive switching by a contactor, sufficient impedance should be connected in series to limit inrush current to not more than 6 times the contactor rated continuous current. In many installations, the impedance of connecting conductors may be sufficient for this purpose. When switching to connect additional banks, the banks already on the line may be charged and can supply additional available short-circuit current which should be considered when selecting the impedance to limit the current.

[36] For NEMA Size 6 and 7, the operation rate is as follows: Continuous operation rate is 3 operations per minute maximum; Jogging or Plugging Duty operation rate is 15 operations per minute for a maximum of three minutes.

© 2019 Schneider Electric
All Rights Reserved
11/20/2019

Courtesy of Steven Engineering, Inc - (800) 258-9200 - sales@steveneng.com - www.stevenengineering.com

Dimensions for Open Type and NEMA 1 Enclosures

NOTE: These dimensions are for reference only. If you need precise measurements, contact the Customer Care Center at 1-888-778-2733.

Table 16.101: Dimensions for Class 8502 Open Type

NEMA Size	Type	No. of Poles	Fig. No.	Dimensions, in. (Refer to Figure 1)									Wt
				A	B	C	D	E	F	G	H	I	
				in.	in.	in.	in.	in.	in.	in.	in.	in.	(lb)
00	SAO	2–3	1	3.22	4.34	4.22	1.63	1.63	0.22	3.94	—	—	4
0	SBO	1–3	1	3.22	4.34	4.22	1.63	1.63	0.22	3.94	—	—	4
1	SCO	4–5		4.25	4.34	4.22	1.63	2.63	0.22	3.94	—	—	4.5
2	SDO	2–3	1	4.31	5.13	4.94	2.16	2.16	0.22	4.59	0.53	1.06	6.75
		4–5		5.63	5.13	4.94	2.16	3.47	0.22	4.59	0.53	1.06	8.25
3	SEO	2–3	1	5.47	7.09	6.5	1.88	3.53	0.31	6.03	3.25	4.75	14
		4–5		9.75	7.88	6.5	3.94	5.81	0.31	7	4.53	9.06	22
4	SFO	2–3	1	6	8.19	6.5	2.06	3.94	0.31	7	3.59	5.31	18
		4–5		9.75	8.19	6.5	3.94	5.81	0.31	7	4.53	9.06	22
5	SGO	2–3	1	8.67	12.31	8.75	3.25	5.81	0.63	11.13	4.75	7.25	45
6	SHO	2–3	1	10.55	28.06	9	3.53	7.03	5.06	18.56	4.75	7.25	80
7	SJO	2–3	1	10.55	37.25	10.88	3.53	7.03	7.22	22.38	4.75	7.25	135

Table 16.102: Dimensions for 8536 Open Type

NEMA Size	Type	No. of Poles	Fig. No.	Dimensions, in. (Refer to Figure 2)									Wt
				A	B	C	D	E	F	G	H	I	
				in.	in.	in.	in.	in.	in.	in.	in.	in.	(lb)
00, 0, 1, 1P	SAO – SCO	2–3	2	3.5	6.77	4.22	0.5	1	1.61	0.2	6.25	3.97	5
0, 1	SBO–SCO	4	2	4.53	6.77	4.22	0.5	1	2.67	0.2	6.25	3.97	5.5
2	SDO	2–3	2	4.31	7.81	4.94	0.5	1	2.16	0.2	7.34	4.06	7.75
		4		5.63	7.81	4.94	0.5	1	3.47	0.2	7.34	4.06	9.25
3	SEO	2–3	2	5.47	11.09	6.5	0.88	1.75	3.59	0.31	10.19	5.75	17
		4		9.75	12.13	6.5	1.81	1.75	5.81	0.31	11.19	5.75	25
4	SFO	3	2	6	12.88	6.5	1.81	1.75	3.94	0.31	11.19	5.75	22
		4		9.75	12.88	6.5	1.81	1.75	5.91	0.31	11.19	5.75	25
5	SGO	3	2	8.56	17.56	8.75	4.75	7.25	5.38	0.63	16.38	6	62
6	SHO	3	2	12.34	28.06	9	4.75	7.25	5.78	5.06	18.56	8.69	85
7	SJO	3	2	12.34	37.25	10.88	4.75	7.25	5.78	7.22	22.38	9	140

Table 16.103: Dimensions for NEMA 1 General Purpose Enclosure

NEMA Size	Type	No. of Poles	Fig. No.	Dimensions, in.													
				A	B	C		D	E	F	G	H	I	J	K	L
						8502	8536									
00 0 1	SAG SBG SCG	All All All	3 3 3	6	10	5.28	5.56	3	0.88	8.13	1	0.94	4.13	5	—	—
2	SDG	All	3	7.81	12.69	6.03	6.31	—	1.09	10.5	1.09	1.09	5.63	5.75	1.09	5.63
3	SEG	All	3	11.44	21.81	8	8.38	—	1.53	18.75	1.53	1.53	8.38	7.75	1.53	8.38
4	SFG	All	5	11.25	25.16	9	9	8.59	1.25	1.25	22.31	1.44	0.44	—	—	—
5	SGG	All	5	17.22	44.22	12.81	12.94	13	2.13	2.13	40	2.13	0.56	—	—	—
6	SHG	All	4	65.75	20.22	13.13	13.13	—	11	64.5	2.31	5.5	—	—	—	—
7	SJG	All	4	93	34.5	23.5	23.5	Floor Mounting								

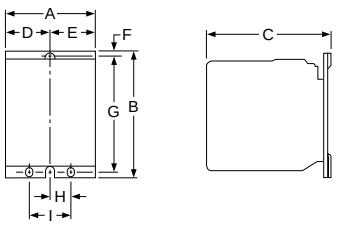

Figure 1
Class 8502

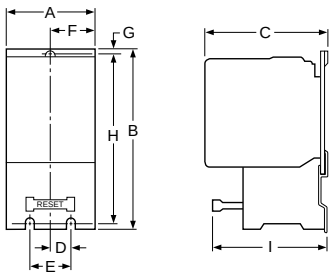

Figure 2
Class 8536

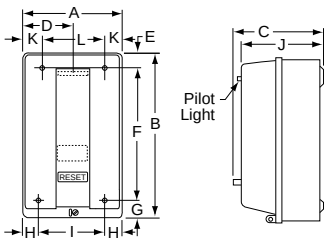

Figure 3

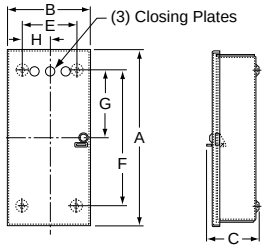

Figure 4

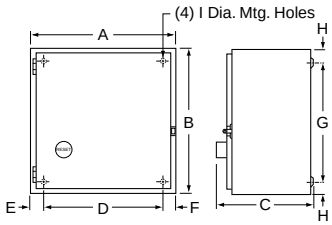

Figure 5

© 2019 Schneider Electric
All Rights Reserved

Courtesy of Steven Engineering, Inc - (800) 258-9200 - sales@steveneng.com - www.stevenengineering.com

Dimensions for NEMA 4 and 4X Enclosures

For the dimensions in Table 16.104 and Table 16.105, see **Figure 6**.

Table 16.104: NEMA 4 and 4X—Stainless Steel Watertight Enclosure

NEMA Size	Class	Type	No. of Poles	Dimensions, in.												Hub Dia.	
																Bot. Only	Top & Bot.
				A	B	C	D	E	F	G	H	I	J	K	L	W	X
0 and 1	8502	SBW	All	6.38	7.13	13.19	1.56	3.25	12	0.59	1.19	11.78	1.63	2.31	0.31	3/4"	1"
		SCW															
	8536	SBW	All	6.38	7.81	13.19	1.56	3.25	12	0.59	1.88	11.78	1.63	2.31	0.31		
		SCW															
2	8502	SDW	All	8.13	7.88	16.19	1.56	5	15	1.09	1.94	14.75	2	2.63	0.31	3/4"	1-1/2"
	8536	SDW	All	8.13	8.56	16.19	1.56	5	15	1.09	2.88	14.75	2	2.63	0.31		
3 and 4	8502	SEW	All	18.16	8.75	32.22	3.08	12	30.5	0.88	3.69	26.72	2.56	3.19	0.44	3/4"	2-1/2"
		SFW															
	8536	SEW	All	18.16	9.56	32.22	3.08	12	30.5	0.88	4.5	26.72	2.56	3.19	0.44	3/4"	2-1/2"
		SFW															
5	8502 & 8536	SGW	All	17.22	12.63	47.22	4.13	9	46	0.63	4.59	28.31	3.13	5.75	0.56	3/4"	3-1/2"
6 *[37]*	8502 & 8536	SHW	All	20.22	12.13	65.22	4.13	12	64	0.63	4.59	30.81	2.69	4.5	0.56	3/4"	(2) 3"
7 *[37]*	8502 & 8536	SJW	All	34.5	23.5	101	Floor Mounting										

Table 16.105: NEMA 4 and 4X—Stainless Steel Watertight Enclosure with Form FF4T

NEMA Size	Class	Type	No. of Poles	Dimensions, in.											
				A	B	C	D	E	F	G	H	I	J	K	L
0 and 1	8502	SBW	All	12.63	7.13	14.69	2.56	7.5	13.5	0.59	3.19	18.81	1.66	2.31	0.31
		SCW													
	8536	SBW	All	12.63	7.81	14.69	2.56	7.5	13.5	0.59	3.88	18.41	1.66	2.31	0.31
		SCW													
2	8502	SDW	All	14.88	7.56	16.31	2.56	9.75	15	0.66	3.19	20.88	2	2.63	0.31
	8536	SDW	All	14.88	8.25	16.31	2.56	9.75	15	0.66	3.88	20.88	2	2.63	0.31
3 and 4	8502	SEW	2–3	Same as Standard NEMA 4 dimensions, see above.											
		SFW	2–3												
	8536	SEW	2–3	Same as Standard NEMA 4 dimensions, see above.											
		SFW	2–3												
5	8502 & 8536	SGW	All	Same as Standard NEMA 4 dimensions, see above.											
6 *[37]*	8502 & 8536	SHW	All	Form FF4T is supplied as standard. Refer to Table 16.321.											
7 *[37]*	8502 & 8536	SJW	All												

For the dimensions in Table 16.106, see **Figure 7**.

Table 16.106: NEMA 4X—Watertight and Corrosion Resistant Glass Polyester Enclosures, Sizes 00–2, without Form FF4T

Size	Type	No. of Poles	Dimensions, in.												Hub		Weight (lb)
															Bot. Only	Top & Bot.	
			A	B	C	D	E	F	G	H	I	J	K	L	W	X	
0, 1	SBW	All	6.5	6.44	12.13	0.75	5	8.75	1.69	3.34	10.06	1.31	2.13	0.31	0.75	1	17
	SCW																
2	SDW	All	8.5	7.06	13.88	0.75	7	10.5	1.69	3.91	11.94	1.63	2.38	0.31	0.75	1.5	22

For the dimensions in Table 16.107, see **Figure 8**.

Table 16.107: NEMA 4X—Watertight and Corrosion Resistant Glass Polyester Enclosures

NEMA Size	Type	No. of Poles	Dimensions, in.				
			A	B	C	E	F
0–2 with Form FF4T	SBW	All	16.88	9.78	22.75	10.13	21.5
	SCW						
	SDW						
3–4	SEW	All	25.81	11.94	33.5	18.5	32.25
	SFW						

NOTE: Devices with Form FF4T may use a larger enclosure. Consult the Customer Care Center at 1-888-778-2733 for dimensions.

NOTE: These dimensions are for reference only. If you need precise measurements, contact the Customer Care Center at 1-888-778-2733.

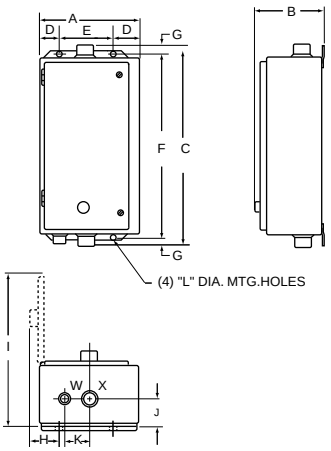

Figure 6: NEMA 4 and 4X—Stainless Steel Watertight Enclosure

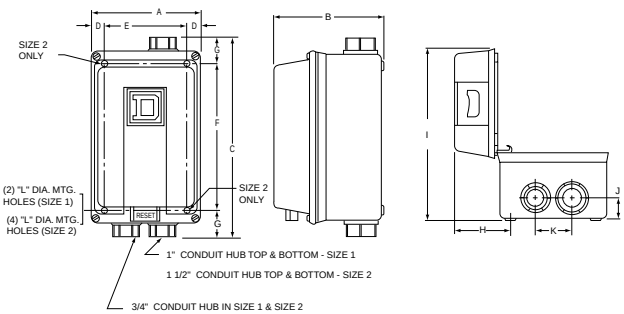

Figure 7: NEMA 4X—Watertight and Corrosion Resistant Glass Polyester Enclosures, Sizes 0–2, without Form FF4T

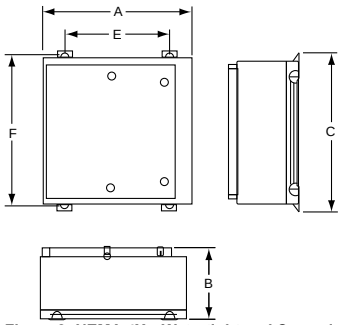

Figure 8: NEMA 4X—Watertight and Corrosion Resistant Glass Polyester Enclosures

[37] Size 6 and 7 are NEMA 4 painted sheet steel enclosures.

© 2019 Schneider Electric
All Rights Reserved
11/20/2019

Courtesy of Steven Engineering, Inc - (800) 258-9200 - sales@steveneng.com - www.stevenengineering.com

NEMA 7 and 9 Enclosures

NOTE: These dimensions are for reference only. If you need precise measurements, contact the Customer Care Center at 1-888-778-2733.

Table 16.108: NEMA 7 and 9 Enclosures

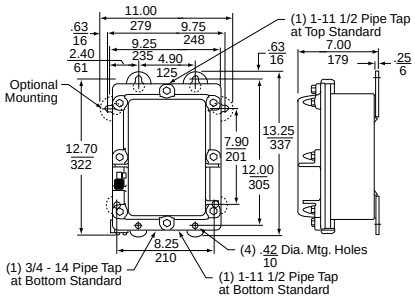

Bolted Cover, Cast Iron Enclosure, NEMA Size 0 and 1 (weight: 59 lb)

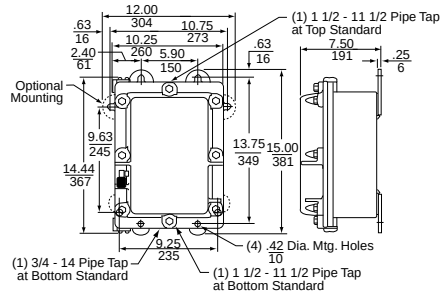

Bolted Cover, Cast Iron Enclosure, NEMA Size 2 (weight: 75 lb)

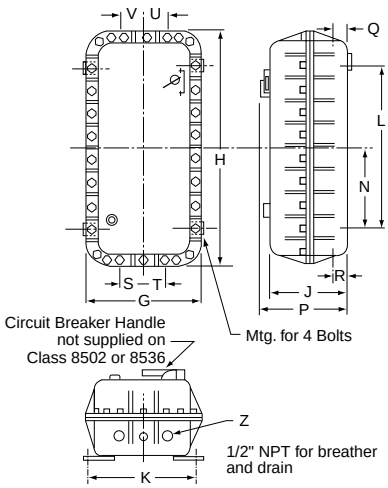

Bolted Cover, Cast Aluminum Enclosure

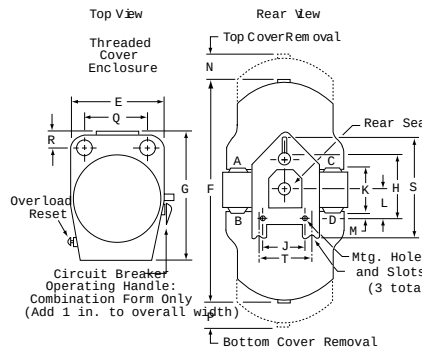

Spin Top™ Enclosure

Table 16.109: NEMA 7 and 9—Bolted Cover, Cast Aluminum Dimensions

NEMA Size	Type	Dimensions, in.									Z Dia.	Wt. (lb)
		G	H	J	K	L	N	P	Q, R	S, T, U, V		
0–1	SBT SCT	14.25	17.25	9.5	12.25	8.88	4.5	11	2.38	3.13	1.5	75
2	SDT	13.63	27.63	9.5	12.25	19.25	9.63	11	2.38	3.13	1.5	115
3–4	SET SFT	18.13	31.63	10	16.25	19.25	9.63	12.63	2.38	3.75	2.5	180

Table 16.110: NEMA 7 and 9—Spin Top™ Enclosure Dimensions

Conduit Sizes Loc. A, B, C & D			Dimensions, in.														Wt. (lb)
NEMA Size	Std.	Type	E	F	G	H	J	K	L	M	N	P	Q	R	S	T	
0–1	1.25	SBR SCR	10.63	26	15.25	8	4.75	5.38	3.75	1.06	7.5	11	7.31	2.06	—	—	70
2	1.5	SDR	13.88	30.5	19.25	8	4.75	5.25	3.75	1.06	7	18	9.38	2.75	—	—	100
3–4	2.5	SER															
SFR			13.38	39.5	20.25	8	4.75	7.5	3.75	—	7.75	23	8.63	3	—	—	165 195

© 2019 Schneider Electric
All Rights Reserved
11/20/2019

Courtesy of Steven Engineering, Inc - (800) 258-9200 - sales@steveneng.com - www.stevenengineering.com

Dimensions for NEMA 12/3R Enclosures

NOTE: These dimensions are for reference only. If you need precise measurements, contact the Customer Care Center at 1-888-778-2733.

Table 16.111: NEMA 12/3R—Dusttight Enclosure

NEMA Size	Type	No. of Poles	Dimensions, in.										Weight (lb)	
			A	B	C	D	E	F	G	H	I	J	Class 8502	Class 8536
0	SBA	All	6.38	8.53	12.75	1.56	3.25	12	0.38	3.56	12.25	0.31	15	16
1	SCA	All												
2	SDA	All	8.13	9.28	16	1.56	5	15	0.5	3.56	15.38	0.31	22	23
3	SEA	All	18.16	9.56	31.5	3.08	12	30.5	0.5	4.5	26.72	0.44	65	68
4	SFA	All											69	73
5	SGA	All	17.22	13.44	47	4.13	9	46	0.5	5.41	28.31	0.56	160	177
6	SHA	All	20.22	13	65	4.13	12	64	0.5	6.44	30.88	0.69	228	233
7	SJA	All	34.5	23.5	93	Floor Mounting							—	—

Table 16.112: NEMA 12/3R—Dusttight Enclosure With Form FF4T

NEMA Size	Type	No. of Poles	Dimensions, in.									
			A	B	C	D	E	F	G	H	I	J
0	SBA	All	11.88	8	13.5	2.81	6.75	12.75	0.38	3.91	18.38	0.31
1	SCA	All										
2	SDA	All	14.88	8.13	16	2.56	9.75	15	0.38	3.66	21.5	0.31
3	SEA	2–3	Same as Standard NEMA 12 dimensions, see above.									
4	SFA	2–3										
5	SGA	All	Same as Standard NEMA 12 dimensions, see above.									
6	SHA	All	Form FF4T comes standard. Refer to page 16-118.									
7	SJA	All										

Table 16.113: NEMA 3R—Rainproof and Sleet Resistant Enclosures

Size	Type	No. of Poles	Dimensions, in.																		
			A	B	C	D1	D2	E	F	G1	G2	H1	H2	J	K	L	M	N	P	K.O. X	K.O. Y
0, 1	SBH SCH	All	8.84	12.28	7.13	1.38	1.44	6	7.5	2.59	2.19	2.06	2.63	14.28	1.38	1.38	1.88	4.38	1.84	1/2 3/4 1	1/2 3/4 1
2	SDH	All	9.84	16.28	8.63	1.38	1.44	7	11.5	2.59	2.19	2.06	2.63	16.78	1.31	1.75	2.13	4.88	1.84	1 1-1/4 1-1/2	1/2 3/4
3	SEH	All	12.84	25.28	8.63	1.38	1.44	10	20.5	2.59	2.19	2.06	2.63	19.78	1.31	1.94	2.44	6.38	1.84	1 1-1/4 2 2-1/2	1/2 3/4
4	SFH	All	12.84	40.28	9.13	1.38	1.44	10	35.5	2.59	2.19	2.06	2.63	20.28	1.31	2.31	2.69	6.38	1.84	1 1-1/4 2 2-1/2	1/2 3/4

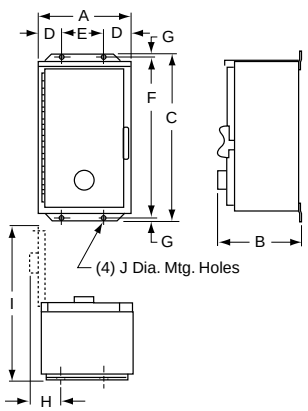

Figure 16.1: NEMA 12/3R

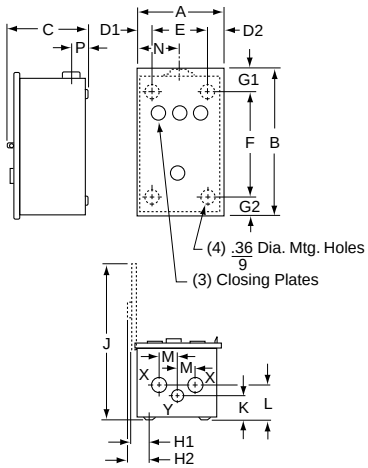

Figure 16.2: NEMA 3R

© 2019 Schneider Electric
All Rights Reserved
11/20/2019

Courtesy of Steven Engineering, Inc - (800) 258-9200 - sales@steveneng.com - www.stevenengineering.com

Class 8502 Type WH

General Information

Class 8502 Type W non-reversing vacuum contactors used to switch capacitors, transformers and electric motors where overload protection is separately provided. Type W vacuum contactors are designed for operation at 600 Volts, 50/60 Hz. (See page 16-66 for Class 8702 Reversing Vacuum Contactors.)

NOTE: In Table 16.114, replace the three bullets (●●●) in the catalog number with the coil voltage code. Refer to the standard coil voltage codes listed in Table 16.117.

Table 16.114: Class 8502—Full Voltage, 3–Pole Vacuum Contactors

NEMA Size	Enclosed Ampere Rating	Locked Rotor Current (A)	Motor Voltage	Max. Hp	Open Style Type
4	135	1080	200 230 460 575	40 50 100 100	WFO3●●●
5	270	2160	200 230 460 575	75 100 200 200	WGO3●●●
6	540	4320	200 230 460 575	150 200 400 400	WHO3●●●

Table 16.115: Class 9998—Replacement Coils for Class 8502 and 8702 Vacuum Contactors (Includes Rectifier)

Size	Type	Poles	Class and Type	Suffix Number (Complete Coil Number Consists of Class and Type Followed by Suffix Number)			
				120 V 110 V	240 V 220 V	480 V 440 V	600 V 550 V
4 5 6	WF WG WH	3 3 3	9998WF 9998WG 9998WH	120	240	480	600

Table 16.116: Class 9999—Vacuum Contactor Kits

Kit Description		For Use With Type	For Use With Size	Class 9999 Type
Auxiliary Contacts, Non-Convertible 1-N.O. & 1-N.C. Isolated Contacts		WF–WG WH	4–5 6	WX11
Coil Circuit Auxiliary Contacts	1-N.O. & 1-N.C. Isolated Contacts, Delayed Break 1-N.C. Isolated Contact	WF WG– WH	4 5–6	WCX11 WLX01
Lug Kits (include 6 lugs)		WG WH	5 6	LUW5 LUW6

Table 16.117: Coil Voltage Codes

Volts	110	120	220	240	440	480	550	600
50 Hz	V02	—	V03	—	V06	—	V07	—
60 Hz	—	V02	—	V03	—	V06	—	V07

Table 16.118: Dimensions, Class 8502

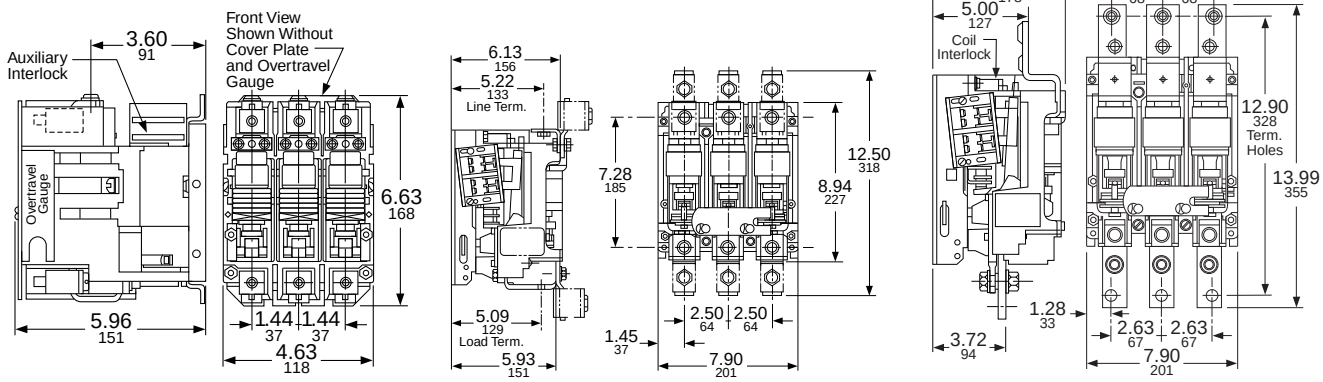

Type WF Size 4 Type WG Size 5 Type WH Size 6

For How to Order Information, see page 16-28.

© 2019 Schneider Electric
All Rights Reserved
11/20/2019

Courtesy of Steven Engineering, Inc - (800) 258-9200 - sales@steveneng.com - www.stevenengineering.com

Class 8502 Type VF

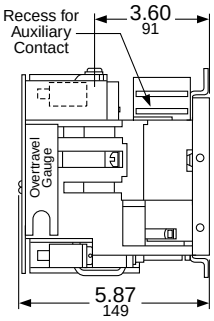

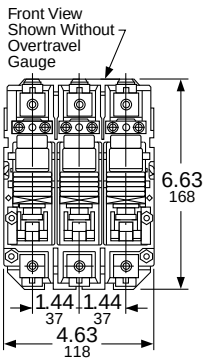

Dimensions for Class 8502 Type VF Size 4

For How to Order Information, see page 16-28.

General Information—Type V Vacuum Contactors

The Class 8502 Type V vacuum contactor is a three-pole device rated 1500 V that meets UL508 (1.5 kV) and CSA. Vacuum technology offers long life and low maintenance in a compact, lightweight design. The contactor is suitable for contaminated atmospheres because the main contacts are sealed in vacuum bottles. Also, since gravity is not used to assist contactor operation, the Class 8502 contactor can be mounted in any plane without special modifications. Type V vacuum contactors are designed for the control of inductive or non-inductive loads at voltages from 200–1500 Vac.

NOTE: In Table 16.119, replace the three bullets (●●●) in the catalog number with the coil voltage code. Refer to the standard coil voltage codes listed in Table 16.122.

Table 16.119: Class 8502—Full Voltage 3 Pole Vacuum Contactors

NEMA Size	Enclosed Ampere Rating	Locked Rotor Current (A)	Motor Voltage	Max. Hp	Open Style Type
4	160	1080	200	50	VFO3●●●
			230	60	
			460	125	
			575	150	
			800	200	
			1000	250	
			1500	400	
5	320	2160	200	100	VGO3●●●
			230	125	
			460	250	
			575	300	
			800	400	
			1000	—	
			1500	800	
6	540	4320	200	150	VHO3●●●
			230	200	
			460	400	
			575	400	
			800	—	
			1000	—	
			1500	1300	

Table 16.120: Class 9998—Replacement Coils for Class 8502/8702 (contains rectifier)

Size	Type	Poles	Class and Type	Suffix (the complete coil number consists of the Class, Type, and suffix)			
				110/120 V	220/240 V	440/480 V	550/600 V
4	VF	3	9998WF	120	240	480	600
5	VG	3	9998WG	120	240	480	600
6	VH	3	9998WH	120	240	480	600

Table 16.121: Class 9999—Vacuum Starter Kits

For Use With		Kit Description	Class 9999 Type
Type	Size		
VF–VG VH	4–5 6	Auxiliary Contacts, Non-Convertible 1 N.O. & 1 N.C. Isolated Contacts	WX11
VF VG–VH	4 5–6	Coil Circuit Auxiliary Contacts 1 N.O. & 1 N.C. Isolated Contacts, Delayed Break 1 N.C. Isolated Contact	WCX11 WLX01
VG VH	5 6	Lug Kits, 6 lugs included	LUW5 LUW6

Table 16.122: Coil Voltage Codes

Voltage	110	120	220	240	440	480	550	600
50 Hz	V02	—	V03	—	V06	—	V07	—
60 Hz	—	V02	—	V03	—	V06	—	V07

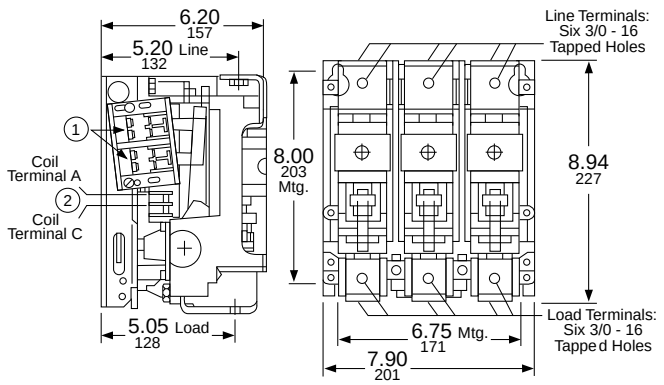

1. Two dual circuit auxiliary contacts can be located on both sides of contactor.
2. Coil Terminals B and D located on opposite side of contactor.

Dimensions for Class 8502 Type VG Size 5

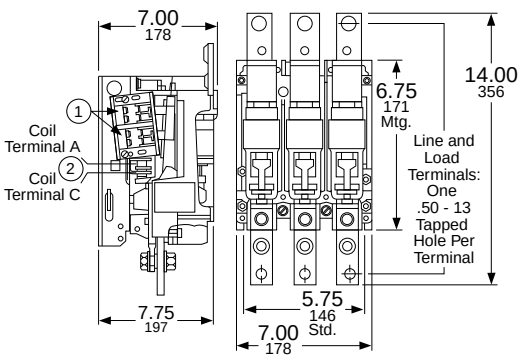

1. Two dual circuit auxiliary contacts can be located on both sides of contactor.
2. Coil terminals B and D located on opposite side of contactor.

Dimensions for Class 8502 Type VH Size 6

© 2019 Schneider Electric
All Rights Reserved
11/20/2019

Courtesy of Steven Engineering, Inc - (800) 258-9200 - sales@steveneng.com - www.stevenengineering.com

General Information—Type W Vacuum Starters

Class 8536 Type W non-reversing vacuum starters are used to switch electric motors where overload protection is not separately provided.

Type W vacuum starters are designed for operation at 600 V, 50/60 Hz. Starters are available exclusively with Motor Logic™ solid-state overload relay (SSOLR), Class 10/20 selectable.

NOTE: In Table 16.123, replace the three bullets (●●●) in the catalog number with the coil voltage code. Refer to the standard coil voltage codes listed in Table 16.126.

Table 16.123: Class 8536—Full Voltage Vacuum Starters

NEMA Size	Enclosed Ampere Rating	Locked Rotor Current (A)	Motor Voltage	Max. Hp	Open Style Type
4	135	1080	200 230 460 575	40 50 100 100	WFO3●●●
5	270	2160	200 230 460 575	75 100 200 200	WGO3●●●
6	540	4320	200 230 460 575	150 200 400 400	WHO3●●●

Table 16.124: Class 9998—Replacement Coils for Class 8536 Vacuum Starters

Size	Type	Poles	Class and Type	Suffix Number (Complete Coil Number Consists of Class and Type Followed by Suffix Number)			
				120 V 110 V	240 V 220 V	480 V 440 V	600 V 550 V
4	WF	All	9998WF	120	240	480	600
5	WG	All	9998WG	120	240	480	600
6	WH	All	9998WH	120	240	480	600

Table 16.125: Class 9999—Vacuum Starter Kits

For Use With Type	For Use With Size	Kit Description	Class 9999 Type
WF–WG WH	4–5 6	Auxiliary Contacts, Non-Convertible 1 N.O. & 1 N.C. Isolated Contacts	WX11
WF WG–WH	4 5–6	Coil Circuit Auxiliary Contacts 1 N.O. & 1 N.C. Isolated Contacts, Delayed Break 1 N.C. Isolated Contact	WCX11 WLX01
WG	5	Lug Kits (6) lugs included	LUW5

Table 16.126: Coil Voltage Codes

Voltage	110	120	220	240	440	480	550	600
50 Hz	V02	—	V03	—	V06	—	V07	—
60 Hz	—	V02	—	V03	—	V06	—	V07

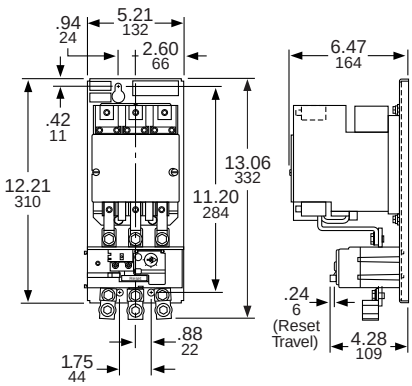

Dimensions for Class 8536 Type WF Size 4

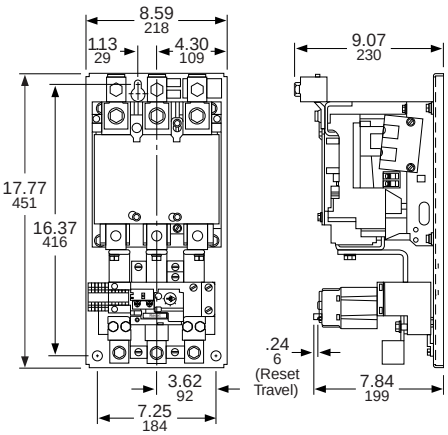

Dimensions for Class 8536 Type WG Size 5

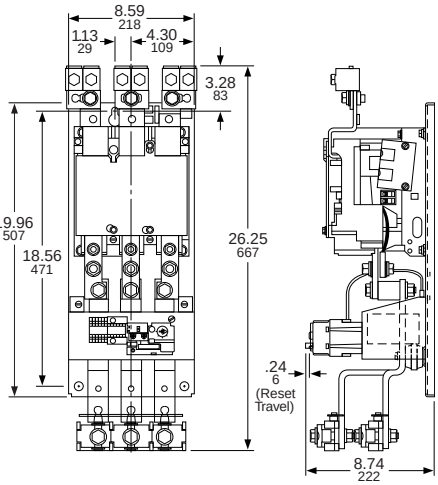

Dimensions for Class 8536 Type WH Size 6

For How to Order Information, see page 16-28

© 2019 Schneider Electric
All Rights Reserved
11/20/2019

Courtesy of Steven Engineering, Inc - (800) 258-9200 - sales@steveneng.com - www.stevenengineering.com

Pre-Configured NEMA Combination Motor Starters

Save time with these simple & easy pre-configured fusible or motor circuit protector combination starters. These combination starters have the most commonly used accessories, pre-installed for quick installation. With the NEMA 12/3R enclosure, these combination starters are ready for use in most common indoor and outdoor applications. The Motor Logic electronic overload provides a wide selection range of FLA without the need for additional melting alloys.

These combination starters contain the most common features, saving you time and money:

- Fusible Disconnect (class H/K) or Motor Circuit Protector
- Ideal for indoor or outdoor applications (3R/12 enclosure)
- Trusted Square D Type S Starter with Electronic Overload
- Hand-Off-Auto with Green ON, Red OFF LED lights
- Auxiliary contacts
- SPDT Aux on disconnect

Table 16.127: Fusible Disconnect Switch

Voltage (Vac)	Horsepower	NEMA Size	Fuse Clip Size (A)	Overload Range (FLA)	Catalog No.
208/240	0.75–2	0 or 1	30	3–9	8538SCASP4
208/240	3–7.5	1	60	9–27	8538SCASP5
480/600	5–10	0 or 1	30	6–18	8538SCASP6
208/240	5–10 (208) 5–15 (240)	1 or 2	60	15–45	8538SDASP4
480/600	15–25	2	60	15–45	8538SDASP6

Table 16.128: Motor Circuit Protector

Voltage (Vac)	Horsepower	NEMA Size	Fuse Clip Size (A)	Overload Range (FLA)	Catalog No.
240/480	0.75–2 (240) 1.5–5 (480)	1	30	3–9	8539SCASP6
240/480	3–7.5 (240) 7.5–15 (480)	2	30	9–27	8539SDASP5
240/480	5–10 (240) 15–25 (480)	2	50	15–45	8539SDASP6

NOTE: For melting alloy overload relay options for the above, please consult your local Schneider Electric representative.

If 120 V is not available, add a transformer:

- 480/240 V to 120 V: 9070TF100D1
- 208 V to 120 V: 9070TF100D3

If Class R fuses are used, add fuse clips:

- Class R 250 V, 30 A:: RFK03
- Class R 250 V, 60 A: RFK06
- Class R 600 V, 30 A: RFK06
- Class R 600 V, 60 A: RFK06H

© 2019 Schneider Electric
All Rights Reserved
11/20/2019

Courtesy of Steven Engineering, Inc - (800) 258-9200 - sales@steveneng.com - www.stevenengineering.com

Fusible Disconnect Switch Type
3-Pole Polyphase—600 Vac Maximum—50–60 Hz

Class 8538 and 8539 Type S combination starters combine the requirements of motor overload and short circuit protection into one package. These starters are manufactured according to NEMA standards and are UL Listed (some Form numbers may not be listed —contact the Customer Care Center). Class 8538 and 8539 combination starters operate at 600 Vac maximum, 50–60 Hz, and can be provided with one of four overloaded relay styles (refer to page 16-33).

For Form H30• (special lower-FLA factory-assembled starter combinations with Motor Logic SSOLR protection), see Solid-State Overload Relay Forms, page 16-119.

Table 16.129: Class 8538 Fusible Full Voltage Type (Class H Fuse Clips), with Motor Logic SSOLR (replace ●●● with the voltage code) *[1]*

Ratings			Fuse Clip Size (A)	NEMA 1 General Purpose Enclosure	NEMA 4 & 4X Watertight and Dusttight Enclosure Stainless Steel (304) (Sizes 0-5) *[2]*	NEMA 4X Watertight, Dusttight and Corrosion Resistant Polyester Enclosure	NEMA 12/3R *[3]* Dusttight and Driptight Industrial Use Enclosure	
Motor Voltage (Starter Voltage)	Max. Hp Polyphase	NEMA Size					With External Reset	Without External Reset
				Type *[4]*	Type *[4]*	Type *[4]*	Type *[4]*	Type *[4]*
200 (208)	3	0	30	SBG12●●●H30 *[5]*	SBW12●●●H30 *[5]*	SBW22●●●H30 *[5]*	SBA22●●●H30 *[5]*	SBA12●●●H30 *[5]*
	5	1	30	SCG12●●●H30 *[5]*	SCW12●●●H30 *[5]*	SCW22●●●H30 *[5]*	SCA22●●●H30 *[5]*	SCA12●●●H30 *[5]*
	7-1/2		60	SCG13●●●H30 *[5]*	SCW13●●●H30 *[5]*	SCW23●●●H30 *[5]*	SCA23●●●H30 *[5]*	SCA13●●●H30 *[5]*
	10	2	60	SDG12●●●H30 *[5]*	SDW12●●●H30 *[5]*	SDW22●●●H30 *[5]*	SDA22●●●H30 *[5]*	SDA12●●●H30 *[5]*
	20	3	100	SEG15●●●H30	SEW15●●●H30	SEW25●●●H30	SEA25●●●H30	SEA15●●●H30
	25		200	SEG12●●●H30	SEW12●●●H30	—	SEA22●●●H30	SEA12●●●H30
	40	4	200	SFG15●●●H30	SFW15●●●H30	—	SFA25●●●H30	SFA15●●●H30
	75	5	400	SGG15●●●H30	SGW15●●●H30	—	SGA25●●●H30	SGA15●●●H30
	150	6	600	SHG13●●●H30	SHW13●●●H30	—	SHA23●●●H30	SHA13●●●H30
230 (240)	3	0	30	SBG12●●●H30 *[5]*	SBW12●●●H30 *[5]*	SBW22●●●H30 *[5]*	SBA22●●●H30 *[5]*	SBA12●●●H30 *[5]*
	5	1	30	SCG12●●●H30 *[5]*	SCW12●●●H30 *[5]*	SCW22●●●H30 *[5]*	SCA22●●●H30 *[5]*	SCA12●●●H30 *[5]*
	7-1/2		60	SCG13●●●H30 *[5]*	SCW13●●●H30 *[5]*	SCW23●●●H30 *[5]*	SCA23●●●H30 *[5]*	SCA13●●●H30 *[5]*
	15	2	60	SDG12●●●H30	SDW12●●●H30 *[5]*	SDW22●●●H30 *[5]*	SDA22●●●H30 *[5]*	SDA12●●●H30 *[5]*
	25	3	100	SEG15●●●H30	SEW15●●●H30	SEW25●●●H30	SEA25●●●H30	SEA15●●●H30
	30		200	SEG12●●●H30	SEW12●●●H30	—	SEA22●●●H30	SEA12●●●H30
	50	4	200	SFG15●●●H30	SFW15●●●H30	—	SFA25●●●H30	SFA15●●●H30
	100	5	400	SGG15●●●H30	SGW15●●●H30	—	SGA25●●●H30	SGA15●●●H30
	200	6	600	SHG13●●●H30	SHW13●●●H30	—	SHA23●●●H30	SHA13●●●H30
460 (480)	5	0	30	SBG13●●●H30 *[5]*	SBW13●●●H30 *[5]*	SBW23●●●H30 *[5]*	SBA23●●●H30 *[5]*	SBA13●●●H30 *[5]*
	10	1	30	SCG14●●●H30 *[5]*	SCW14●●●H30 *[5]*	SCW24●●●H30 *[5]*	SCA24●●●H30 *[5]*	SCA14●●●H30 *[5]*
	15	2	30	SDG16●●●H301	SDW16●●●H301	SDW26●●●H301	SDA26●●●H301	SDA16●●●H301
	25		60	SDG14●●●H30 *[5]*	SDW14●●●H30 *[5]*	SDW24●●●H30 *[5]*	SDA24●●●H30 *[5]*	SDA14●●●H30 *[5]*
	50	3	100	SEG13●●●H30	SEW13●●●H30	SEW23●●●H30	SEA23●●●H30	SEA13●●●H30
	100	4	200	SFG13●●●H30	SFW13●●●H30	—	SFA23●●●H30	SFA13●●●H30
	200	5	400	SGG13●●●H30	SGW13●●●H30	—	SGA23●●●H30	SGA13●●●H30
	400	6	600	SHG12●●●H30	SHW12●●●H30	—	SHA22●●●H30	SHA12●●●H30
575 (600)	5	0	30	SBG13●●●H30	SBW13●●●H30	SBW23●●●H30	SBA23●●●H30	SBA13●●●H30
	10	1	30	SCG14●●●H30	SCW14●●●H30	SCW24●●●H30	SCA24●●●H30	SCA14●●●H30
	15	2	30	SDG16●●●H301	SDW16●●●H301	SDW26●●●H301	SDA26●●●H301	SDA16●●●H301
	25		60	SDG14●●●H30	SDW14●●●H30	SDW24●●●H30	SDA24●●●H30	SDA14●●●H30
	50	3	100	SEG13●●●H30	SEW13●●●H30	SEW23●●●H30	SEA23●●●H30	SEA13●●●H30
	100	4	200	SFG13●●●H30	SFW13●●●H30	—	SFA23●●●H30	SFA13●●●H30
	200	5	400	SGG13●●●H30	SGW13●●●H30	—	SGA23●●●H30	SGA13●●●H30
	400	6	600	SHG12●●●H30	SHW12●●●H30	—	SHA22●●●H30	SHA12●●●H30

NOTE: Some control transformers may require the use of oversized enclosures. Refer to .

3 or 5 Days *Laser Delivery*

Schneider Electric offers express shipping for factory modified NEMA Combo Starters. When you need them fast, our Laser™ Delivery program is the answer to getting your product when you need it most. Ask for Laser™ Delivery, then select the product and the modifications you need when you place your order. It's as easy as that!

Table 16.130: Class 8538 Fusible Disconnect Switch Type (Class H Fuse Clips), Single Phase, *[6][7]* **with Melting Alloy Overload Relays (see Thermal Unit Selection, page 16-132)**

Motor Voltage	Max. Hp	Coil Voltage	NEMA Size	Poles	Fuse Clip Size (A)	NEMA 1 General Purpose Enclosure	NEMA 4 & 4X Watertight and Dusttight Enclosure Stainless Steel (304)	NEMA 4X Watertight, Dusttight and Corrosion Resistant Polyester Enclosure	NEMA 12/3R *[3]* Dusttight and Driptight Industrial Use Enclosure	
									With External Reset	Without External Reset
						Type	Type	Type	Type	Type
120	1	120	0	2	30	SBG62V02	SBW62V02	SBW65V02	SBA65V02	SBA62V02
	2		1		30	SCG62V02	SCW62V02	SCW65V02	SCA65V02	SCA62V02
	3		2		60	SDG62V02	SDW62V02	SDW65V02	SDA65V02	SDA62V02
240	2	240	0	2	30	SBG62V03	SBW62V03	SBW65V03	SBA65V03	SBA62V03
	3		1		30	SCG62V03	SCW62V03	SCW65V03	SCA65V03	SCA62V03
	7-1/2		2		60	SDG62V03	SDW62V03	SDW65V03	SDA65V03	SDA62V03

For How to Order Information, see page 16-28.

[1] To order melting alloy overload relay, remove form "H30" from part number.
[2] Size 6 starters are NEMA 4 painted sheet steel enclosures.
[3] NEMA 12 enclosures can be field modified for outdoor non-corrosive and non–service entrance rated applications. See page 16-112 for more information.
[4] Replace the three bullets (●●●) in the catalog number with the coil voltage code. Refer to the standard coil voltage codes shown in
[5] **Form H30**, with the possibility of a fourth character to select a lower FLA range (for example, **H308**). See "Solid-State Overload Relay Forms" on page 16-119
[6] Single-phase units require one thermal unit. They are not available with **Form H••** (solid-state overload relays).
[7] Not included in the Laser™ Delivery program.

© 2019 Schneider Electric
All Rights Reserved
11/20/2019

Courtesy of Steven Engineering, Inc - (800) 258-9200 - sales@steveneng.com - www.stevenengineering.com

Non-Fusible Disconnect Switch Type
3-Pole Polyphase—600 Vac Maximum—50–60 Hz

For Form H30• (special lower-FLA factory-assembled starter combinations with Motor Logic SSOLR protection), see Solid-State Overload Relay Forms, page 16-119.

Table 16.131: Class 8538 Non-Fusible Full Voltage Type, Non-Reversing, with Motor Logic SSOLR (replace ●●● with the voltage code) *[8]*

Ratings			NEMA 1 General Purpose Enclosure	NEMA 4 & 4X Watertight and Dusttight Enclosure Stainless Steel (304) (Sizes 0–5) *[9]*	NEMA 4X Watertight, Dusttight and Corrosion Resistant Polyester Enclosure	NEMA 12/3R *[10]* Dusttight and Driptight Industrial Enclosure	
						With External Reset	Without External Reset
Motor Voltage (Starter Voltage)	Max. Hp Polyphase	NEMA Size	Type *[11]*	Type *[11]*	Type *[11]*	Type *[11]*	Type *[11]*
200 (208)	3	0	SBG11●●●H30 *[12]*	SBW11●●●H30 *[12]*	SBW21●●●H30 *[12]*	SBA21●●●H30 *[12]*	SBA11●●●H30 *[12]*
	7-1/2	1	SCG11●●●H30 *[12]*	SCW11●●●H30 *[12]*	SCW21●●●H30 *[12]*	SCA21●●●H30 *[12]*	SCA11●●●H30 *[12]*
	10	2	SDG11●●●H30 *[12]*	SDW11●●●H30 *[12]*	SDW21●●●H30 *[12]*	SDA21●●●H30 *[12]*	SDA11●●●H30 *[12]*
	25	3	SEG11●●●H30	SEW11●●●H30	SEW21●●●H30	SEA21●●●H30	SEA11●●●H30
	40	4	SFG11●●●H30	SFW11●●●H30	—	SFA21●●●H30	SFA11●●●H30
	75	5	SGG11●●●H30	SGW11●●●H30	—	SGA21●●●H30	SGA11●●●H30
	150	6	SHG11●●●H30	SHW11●●●H30	—	SHA21●●●H30	SHA11●●●H30
230 (240)	3	0	SBG11●●●H30 *[12]*	SBW11●●●H30 *[12]*	SBW21●●●H30 *[12]*	SBA21●●●H30 *[12]*	SBA11●●●H30 *[12]*
	7-1/2	1	SCG11●●●H30 *[12]*	SCW11●●●H30 *[12]*	SCW21●●●H30 *[12]*	SCA21●●●H30 *[12]*	SCA11●●●H30 *[12]*
	15	2	SDG11●●●H30 *[12]*	SDW11●●●H30 *[12]*	SDW21●●●H30 *[12]*	SDA21●●●H30 *[12]*	SDA11●●●H30 *[12]*
	30	3	SEG11●●●H30	SEW11●●●H30	SEW21●●●H30	SEA21●●●H30	SEA11●●●H30
	50	4	SFG11●●●H30	SFW11●●●H30	—	SFA21●●●H30	SFA11●●●H30
	100	5	SGG11●●●H30	SGW11●●●H30	—	SGA21●●●H30	SGA11●●●H30
	200	6	SHG11●●●H30	SHW11●●●H30	—	SHA21●●●H30	SHA11●●●H30
460 (480)	5	0	SBG11●●●H30 *[12]*	SBW11●●●H30 *[12]*	SBW21●●●H30 *[12]*	SBA21●●●H30 *[12]*	SBA11●●●H30 *[12]*
	10	1	SCG11●●●H30 *[12]*	SCW11●●●H30 *[12]*	SCW21●●●H30 *[12]*	SCA21●●●H30 *[12]*	SCA11●●●H30 *[12]*
	25	2	SDG11●●●H30 *[12]*	SDW11●●●H30 *[12]*	SDW21●●●H30 *[12]*	SDA21●●●H30 *[12]*	SDA11●●●H30 *[12]*
	50	3	SEG11●●●H30	SEW11●●●H30	SEW21●●●H30	SEA21●●●H30	SEA11●●●H30
	100	4	SFG11●●●H30	SFW11●●●H30	—	SFA21●●●H30	SFA11●●●H30
	200	5	SGG11●●●H30	SGW11●●●H30	—	SGA21●●●H30	SGA11●●●H30
	400	6	SHG11●●●H30	SHW11●●●H30	—	SHA21●●●H30	SHA11●●●H30
575 (600)	5	0	SBG11●●●H30	SBW11●●●H30	SBW21●●●H30	SBA21●●●H30	SBA11●●●H30
	10	1	SCG11●●●H30	SCW11●●●H30	SCW21●●●H30	SCA21●●●H30	SCA11●●●H30
	25	2	SDG11●●●H30	SDW11●●●H30	SDW21●●●H30	SDA21●●●H30	SDA11●●●H30
	50	3	SEG11●●●H30	SEW11●●●H30	SEW21●●●H30	SEA21●●●H30	SEA11●●●H30
	100	4	SFG11●●●H30	SFW11●●●H30	—	SFA21●●●H30	SFA11●●●H30
	200	5	SGG11●●●H30	SGW11●●●H30	—	SGA21●●●H30	SGA11●●●H30
	400	6	SHG11●●●H30	SHW11●●●H30	—	SHA21●●●H30	SHA11●●●H30

Table 16.132: Class 8538 Non-Fusible Disconnect Switch Type, Single Phase, with Melting Alloy Overload Relay *[13] [14]*
(see Thermal Unit Selection, page 16-132)

Motor Voltage	Max. Hp	Coil Voltage	NEMA Size	Poles	NEMA 1 General Purpose Enclosure	NEMA 4 & 4X Watertight and Dusttight Enclosure Stainless Steel (304)	NEMA 4X Watertight, Dusttight and Corrosion Resistant Polyester Enclosure	NEMA 12/3R *[10]* Dusttight and Driptight Industrial Enclosure	
								With External Reset	Without External Reset
					Type	Type	Type	Type	Type
120	1	120	0	2	SBG61V02	SBW61V02	SBW64V02	SBA64V02	SBA61V02
	2		1		SCG61V02	SCW61V02	SCW64V02	SCA64V02	SCA61V02
	3		2		SDG61V02	SDW61V02	SDW64V02	SDA64V02	SDA61V02
240	2	240	0	2	SBG61V03	SBW61V03	SBW64V03	SBA64V03	SBA61V03
	3		1		SCG61V03	SCW61V03	SCW64V03	SCA64V03	SCA61V03
	7-1/2		2		SDG61V03	SDW61V03	SDW64V03	SDA64V03	SDA61V03

NOTE: Some control transformers may require the use of oversized enclosures. Refer to .

Table 16.133: Coil Voltage Codes

Voltage		Code
60 Hz	50 Hz	
24 *[15]*	—	V01
120 *[16]*	110	V02
208	—	V08
240	220	V03
277	—	V04
480	440	V06
600	550	V07
Specify	Specify	V99

NOTE: For voltage codes used with control transformers, see page . Form S (separate control) is used when a separate source of power is available for the control (coil) voltage. Form S is available at no charge.

For How to Order Information, see page 16-28.

3or5 Days Laser Delivery

[8] To order melting alloy overload relay, remove form "H30" from part number.
[9] Size 6 starters are NEMA 4 painted sheet steel enclosures.
[10] NEMA 12 enclosures can be field modified for outdoor non-corrosive and non–service entrance rated applications. See page 16-112 for more information.
[11] Replace the three bullets (●●●) in the catalog number with the coil voltage code. Refer to the standard coil voltage codes shown in
[12] **Form H30**, with the possibility of a fourth character to select a lower FLA range (for example, **H308**). See "Solid-State Overload Relay Forms" on page 16-119
[13] Single-phase units require one thermal unit. They are not available with **Form H••** (solid-state overload relays).
[14] Not included in the Laser™ Delivery program.
[15] 24 V coils are not available on Sizes 4–7. On Sizes 00–3, where 24 V coils are available, **Form S** (separate control) must be specified (for example, order as 8538SBG11V01S).
[16] These voltage codes must include **Form S** (furnished at no charge).
When specifying **Form S**, please include the motor voltage when ordering (for example, order as 8538SCG11V02S).

© 2019 Schneider Electric
All Rights Reserved
11/20/2019

Courtesy of Steven Engineering, Inc - (800) 258-9200 - sales@steveneng.com - www.stevenengineering.com

Fusible Disconnect Switch Type with Class R Fuse Clips 3-Pole Polyphase—600 Vac Maximum—50–60 Hz

For Form H30• (special lower-FLA factory-assembled starter combinations with Motor Logic SSOLR protection), see Solid-State Overload Relay Forms, page 16-119.

Table 16.134: Class 8538 Fusible (with Class R Fuse Clips) Full Voltage Type, Non-Reversing, with Motor Logic SSOLR (100,000 AIC Rated) (replace ●●● with the voltage code) *[17]*

Ratings				NEMA 1 General Purpose Enclosure	NEMA 4 & 4X Watertight and Dusttight Enclosure Stainless Steel (304) (Sizes 0–5) *[18]*	NEMA 4 & 4X Watertight, Dusttight and Corrosion Resistant Polyester Enclosure	NEMA 12/3R *[19]* Dusttight and Driptight Industrial Enclosure	
Motor Voltage (Starter Voltage)	Max. Hp Polyphase	NEMA Size	Fuse Clip Size (A)				With External Reset	Without External Reset
				Type *[20]*	Type *[20]*	Type *[20]*	Type *[20]*	Type *[20]*
200 (208)	3	0	30	SBG32●●●H30 *[21]*	SBW32●●●H30 *[21]*	SBW42●●●H30 *[21]*	SBA42●●●H30 *[21]*	SBA32●●●H30 *[21]*
	5	1	30	SCG32●●●H30 *[21]*	SCW32●●●H30 *[21]*	SCW42●●●H30 *[21]*	SCA42●●●H30 *[21]*	SCA32●●●H30 *[21]*
	7-1/2	1	60	SCG33●●●H30 *[21]*	SCW33●●●H30 *[21]*	SCW43●●●H30 *[21]*	SCA43●●●H30 *[21]*	SCA33●●●H30 *[21]*
	10	2	60	SDG32●●●H30 *[21]*	SDW32●●●H30 *[21]*	SDW42●●●H30 *[21]*	SDA42●●●H30 *[21]*	SDA32●●●H30 *[21]*
	20	3	100	SEG35●●●H30	SEW35●●●H30	SEW45●●●H30	SEA45●●●H30	SEA35●●●H30
	25	3	200	SEG32●●●H30	SEW32●●●H30	—	SEA42●●●H30	SEA32●●●H30
	40	4	200	SFG35●●●H30	SFW35●●●H30	—	SFA45●●●H30	SFA35●●●H30
	75	5	400	SGG35●●●H30	SGW35●●●H30	—	SGA45●●●H30	SGA35●●●H30
	150	6	600	SHG33●●●H30	SHW33●●●H30	—	SHA43●●●H30	SHA33●●●H30
230 (240)	3	0	30	SBG32●●●H30 *[21]*	SBW32●●●H30 *[21]*	SBW42●●●H30 *[21]*	SBA42●●●H30 *[21]*	SBA32●●●H30 *[21]*
	5	1	30	SCG32●●●H30 *[21]*	SCW32●●●H30 *[21]*	SCW42●●●H30 *[21]*	SCA42●●●H30 *[21]*	SCA32●●●H30 *[21]*
	7-1/2	1	60	SCG33●●●H30 *[21]*	SCW33●●●H30 *[21]*	SCW43●●●H30 *[21]*	SCA43●●●H30 *[21]*	SCA33●●●H30 *[21]*
	15	2	60	SDG32●●●H30 *[21]*	SDW32●●●H30 *[21]*	SDW42●●●H30 *[21]*	SDA42●●●H30 *[21]*	SDA32●●●H30 *[21]*
	25	3	100	SEG35●●●H30	SEW35●●●H30	SEW45●●●H30	SEA45●●●H30	SEA35●●●H30
	30	3	200	SEG32●●●H30	SEW32●●●H30	—	SEA42●●●H30	SEA32●●●H30
	50	4	200	SFG35●●●H30	SFW35●●●H30	—	SFA45●●●H30	SFA35●●●H30
	100	5	400	SGG35●●●H30	SGW35●●●H30	—	SGA45●●●H30	SGA35●●●H30
	200	6	600	SHG33●●●H30	SHW33●●●H30	—	SHA43●●●H30	SHA33●●●H30
460 (480)	5	0	30	SBG33●●●H30 *[21]*	SBW33●●●H30 *[21]*	SBW43●●●H30 *[21]*	SBA43●●●H30 *[21]*	SBA33●●●H30 *[21]*
	10	1	30	SCG34●●●H30 *[21]*	SCW34●●●H30 *[21]*	SCW44●●●H30 *[21]*	SCA44●●●H30 *[21]*	SCA34●●●H30 *[21]*
	15	2	30	SDG36●●●H301	SDW36●●●H301	SDW46●●●H301	SDA46●●●H301	SDA36●●●H301
	25	2	60	SDG34●●●H30 *[21]*	SDW34●●●H30 *[21]*	SDW44●●●H30 *[21]*	SDA44●●●H30 *[21]*	SDA34●●●H30 *[21]*
	50	3	100	SEG33●●●H30	SEW33●●●H30	SEW43●●●H30	SEA43●●●H30	SEA33●●●H30
	100	4	200	SFG33●●●H30	SFW33●●●H30	—	SFA43●●●H30	SFA33●●●H30
	200	5	400	SGG33●●●H30	SGW33●●●H30	—	SGA43●●●H30	SGA33●●●H30
	400	6	600	SHG32●●●H30	SHW32●●●H30	—	SHA42●●●H30	SHA32●●●H30
575 (600)	5	0	30	SBG33●●●H30 *[21]*	SBW33●●●H30 *[21]*	SBW43●●●H30 *[21]*	SBA43●●●H30 *[21]*	SBA33●●●H30 *[21]*
	10	1	30	SCG34●●●H30 *[21]*	SCW34●●●H30 *[21]*	SCW44●●●H30 *[21]*	SCA44●●●H30 *[21]*	SCA34●●●H30 *[21]*
	15	2	30	SDG36●●●H301	SDW36●●●H301	SDW46●●●H301	SDA46●●●H301	SDA36●●●H301
	25	2	60	SDG34●●●H30 *[21]*	SDW34●●●H30 *[21]*	SDW44●●●H30 *[21]*	SDA44●●●H30 *[21]*	SDA34●●●H30 *[21]*
	50	3	100	SEG33●●●H30	SEW33●●●H30	SEW43●●●H30	SEA43●●●H30	SEA33●●●H30
	100	4	200	SFG33●●●H30	SFW33●●●H30	—	SFA43●●●H30	SFA33●●●H30
	200	5	400	SGG33●●●H30	SGW33●●●H30	—	SGA43●●●H30	SGA33●●●H30
	400	6	600	SHG32●●●H30	SHW32●●●H30	—	SHA42●●●H30	SHA32●●●H30

NOTE: Some control transformers may require the use of oversized enclosures. Refer to .

Table 16.135: Class 8538 Fusible Disconnect Switch Type (Class R Fuses), Single Phase with Melting Alloy Overload Relay *[22][23]* **(see Thermal Unit Selection, page 16-132)**

Motor Voltage	Max. Hp	Coil Voltage	NEMA Size	Poles	Fuse Clip Size (A)	NEMA 1 General Purpose Enclosure	NEMA 4 & 4X Watertight and Dusttight Enclosure Stainless Steel	NEMA 4X Watertight, Dusttight and Corrosion Resistant Polyester Enclosure	NEMA 12/3R Dusttight and Driptight Industrial Use Enclosure	
									With External Reset	Without External Reset
						Type	Type	Type	Type	Type
120	1	120	0	2	30	SBG63V02	SBW63V02	SBW66V02	SBA66V02	SBA63V02
	2		1		30	SCG63V02	SCW63V02	SCW66V02	SCA66V02	SCA63V02
	3		2		60	SDG63V02	SDW63V02	SDW66V02	SDA66V02	SDA63V02
240	2	240	0	2	30	SBG63V03	SBW63V03	SBW66V03	SBA66V03	SBA63V03
	3		1		30	SCG63V03	SCW63V03	SCW66V03	SCA66V03	SCA63V03
	7-1/2		2		60	SDG63V03	SDW63V03	SDW66V03	SDA66V03	SDA63V03

Table 16.136: Coil Voltage Codes

Voltage		Code
60 Hz	50 Hz	
24 *[24]*	—	V01
120 *[25]*	110	V02
208	—	V08
240	220	V03
277	—	V04
480	440	V06
600	550	V07
Specify	Specify	V99

NOTE: For voltage codes used with control transformers, see .
Form S (separate control) is used when a separate source of power is available for the control (coil) voltage. Form S is available at no charge.

For How to Order Information, see page 16-28.

3 or 5 Days Laser Delivery

[17] To order melting alloy overload relay, remove form "H30" from part number.
[18] Size 6 starters are NEMA 4 painted sheet steel enclosures.
[19] NEMA 12 enclosures can be field modified for outdoor non-corrosive and non–service entrance rated applications. See page 16-112 for more information.
[20] Replace the three bullets (●●●) in the catalog number with the coil voltage code. Refer to the standard coil voltage codes shown in Table 16.136.
[21] **Form H30**, with the possibility of a fourth character to select a lower FLA range (for example, **H308**). See "Solid-State Overload Relay Forms" on page 16-119
[22] Single-phase units require one thermal unit. They are not available with **Form H••** (solid-state overload relays).
[23] Not included in the Laser™ Delivery program.
[24] 24 V coils are not available on Sizes 4–7. On Sizes 00-3, where 24 V coils are available, **Form S** (separate control) must be specified (i.e., order as 8538SBG32V01S).
[25] These voltage codes must include **Form S** (provided at no charge). When specifying **Form S**, please include the motor voltage when ordering (for example, order as 8538SCG32V02S).

© 2019 Schneider Electric
All Rights Reserved

Courtesy of Steven Engineering, Inc - (800) 258-9200 - sales@steveneng.com - www.stevenengineering.com

Full Voltage Type with Motor Logic Solid-State Overload Relays 3-Pole Polyphase—600 Vac Maximum—50–60 Hz

For Form H30• (special lower-FLA factory-assembled starter combinations with Motor Logic SSOLR protection), see Solid-State Overload Relay Forms, page 16-119.

Table 16.137: Class 8538 with Oversized Enclosures (replace ●●● with the voltage code)[26]

Ratings				NEMA 1 General Purpose Enclosure	NEMA 4 & 4X Watertight and Dustight Enclosure Stainless Steel (304)	NEMA 12/3R[27] Dusttight and Driptight Industrial Use Enclosure	
						With External Reset	Without External Reset
Motor Voltage (Starter Voltage)	Max. Hp Polyphase	NEMA Size	Fuse Clip Size (A)	Type [28]	Type [28]	Type [28]	Type [28]
Class 8538 Non-Fusible Disconnect Switch Type—NEMA Size 0–2[29][30]							
200 (208)	3	0	N/A	SBG11S8●●●H30 [31]	SBW11S8●●●H30 [31]	SBA21S8●●●H30 [31]	SBA11S8●●●H30 [31]
	7-1/2	1	N/A	SCG11S8●●●H30 [31]	SCW11S8●●●H30 [31]	SCA21S8●●●H30 [31]	SCA11S8●●●H30 [31]
	10	2	N/A	SDG11S8●●●H30 [31]	SDW11S8●●●H30 [31]	SDA21S8●●●H30 [31]	SDA11S8●●●H30 [31]
230 (240)	3	0	N/A	SBG11S8●●●H30 [31]	SBW11S8●●●H30 [31]	SBA21S8●●●H30 [31]	SBA11S8●●●H30 [31]
	7-1/2	1	N/A	SCG11S8●●●H30 [31]	SCW11S8●●●H30 [31]	SCA21S8●●●H30 [31]	SCA11S8●●●H30 [31]
	15	2	N/A	SDG11S8●●●H30 [31]	SDW11S8●●●H30 [31]	SDA21S8●●●H30 [31]	SDA11S8●●●H30 [31]
460 (480)	5	0	N/A	SBG11S8●●●H30 [31]	SBW11S8●●●H30 [31]	SBA21S8●●●H30 [31]	SBA11S8●●●H30 [31]
	10	1	N/A	SCG11S8●●●H30 [31]	SCW11S8●●●H30 [31]	SCA21S8●●●H30 [31]	SCA11S8●●●H30 [31]
	25	2	N/A	SDG11S8●●●H30 [31]	SDW11S8●●●H30 [31]	SDA21S8●●●H30 [31]	SDA11S8●●●H30 [31]
575 (600)	5	0	N/A	SBG11S8●●●H30 [31]	SBW11S8●●●H30 [31]	SBA21S8●●●H30 [31]	SBA11S8●●●H30 [31]
	10	1	N/A	SCG11S8●●●H30 [31]	SCW11S8●●●H30 [31]	SCA21S8●●●H30 [31]	SCA11S8●●●H30 [31]
	25	2	N/A	SDG11S8●●●H30 [31]	SDW11S8●●●H30 [31]	SDA21S8●●●H30 [31]	SDA11S8●●●H30 [31]
Class 8538 Fusible Disconnect Switch Type—NEMA Size 0–2[29][30]							
200 (208)	3	0	30	SBG12S8●●●H30 [31]	SBW12S8●●●H30 [31]	SBA22S8●●●H30 [31]	SBA12S8●●●H30 [31]
	5	1	30	SCG12S8●●●H30 [31]	SCW12S8●●●H30 [31]	SCA22S8●●●H30 [31]	SCA12S8●●●H30 [31]
	7-1/2	1	60	SCG13S8●●●H30 [31]	SCW13S8●●●H30 [31]	SCA23S8●●●H30 [31]	SCA13S8●●●H30 [31]
	10	2	60	SDG12S8●●●H30 [31]	SDW12S8●●●H30 [31]	SDA22S8●●●H30 [31]	SDA12S8●●●H30 [31]
230 (240)	3	0	30	SBG12S8●●●H30 [31]	SBW12S8●●●H30 [31]	SBA22S8●●●H30 [31]	SBA12S8●●●H30 [31]
	5	1	30	SCG12S8●●●H30 [31]	SCW12S8●●●H30 [31]	SCA22S8●●●H30 [31]	SCA12S8●●●H30 [31]
	7-1/2	1	60	SCG13S8●●●H30 [31]	SCW13S8●●●H30 [31]	SCA23S8●●●H30 [31]	SCA13S8●●●H30 [31]
	15	2	60	SDG12S8●●●H30 [31]	SDW12S8●●●H30 [31]	SDA22S8●●●H30 [31]	SDA12S8●●●H30 [31]
460 (480)	5	0	30	SBG13S8●●●H30 [31]	SBW13S8●●●H30 [31]	SBA23S8●●●H30 [31]	SBA13S8●●●H30 [31]
	10	1	30	SCG14S8●●●H30 [31]	SCW14S8●●●H30 [31]	SCA24S8●●●H30 [31]	SCA14S8●●●H30 [31]
	15	2	30	SDG16S8●●●H301	SDW16S8●●●H301	SDA26S8●●●H301	SDA16S8●●●H301
	25	2	60	SDG14S8●●●H30 [31]	SDW14S8●●●H30 [31]	SDA24S8●●●H30 [31]	SDA14S8●●●H30 [31]
575 (600)	5	0	30	SBG13S8●●●H30 [31]	SBW13S8●●●H30 [31]	SBA23S8●●●H30 [31]	SBA13S8●●●H30 [31]
	10	1	30	SCG14S8●●●H30 [31]	SCW14S8●●●H30 [31]	SCA24S8●●●H30 [31]	SCA14S8●●●H30 [31]
	15	2	30	SDG16S8●●●H301	SDW16S8●●●H301	SDA26S8●●●H301	SDA16S8●●●H301
	25	2	60	SDG14S8●●●H30 [31]	SDW14S8●●●H30 [31]	SDA24S8●●●H30 [31]	SDA14S8●●●H30 [31]
Class 8538 Fusible Disconnect Switch Type with Class R Fuse Clips—NEMA Size 0–2[29][30]							
200 (208)	3	0	30	SBG32S8●●●H30 [31]	SBW32S8●●●H30 [31]	SBA42S8●●●H30 [31]	SBA32S8●●●H30 [31]
	5	1	30	SCG32S8●●●H30 [31]	SCW32S8●●●H30 [31]	SCA42S8●●●H30 [31]	SCA32S8●●●H30 [31]
	7-1/2	1	60	SCG33S8●●●H30 [31]	SCW33S8●●●H30 [31]	SCA43S8●●●H30 [31]	SCA33S8●●●H30 [31]
	10	2	60	SDG32S8●●●H30 [31]	SDW32S8●●●H30 [31]	SDA42S8●●●H30 [31]	SDA32S8●●●H30 [31]
230 (240)	3	0	30	SBG32S8●●●H30 [31]	SBW32S8●●●H30 [31]	SBA42S8●●●H30 [31]	SBA32S8●●●H30 [31]
	5	1	30	SCG32S8●●●H30 [31]	SCW32S8●●●H30	SCA42S8●●●H30	SCA32S8●●●H30
	7-1/2	1	60	SCG33S8●●●H30	SCW33S8●●●H30 [31]	SCA43S8●●●H30 [31]	SCA33S8●●●H30 [31]
	15	2	60	SDG32S8●●●H30 [31]	SDW32S8●●●H30 [31]	SDA42S8●●●H30 [31]	SDA32S8●●●H30 [31]
460 (480)	5	0	30	SBG33S8●●●H30 [31]	SBW33S8●●●H30 [31]	SBA43S8●●●H30 [31]	SBA33S8●●●H30 [31]
	10	1	30	SCG34S8●●●H30 [31]	SCW34S8●●●H30 [31]	SCA44S8●●●H30 [31]	SCA34S8●●●H30 [31]
	15	2	30	SDG36S8●●●H301	SDW36S8●●●H301	SDA46S8●●●H301	SDA36S8●●●H301
	25	2	60	SDG34S8●●●H30 [31]	SDW34S8●●●H30 [31]	SDA44S8●●●H30 [31]	SDA34S8●●●H30 [31]
575 (600)	5	0	30	SBG33S8●●●H30 [31]	SBW33S8●●●H30 [31]	SBA43S8●●●H30 [31]	SBA33S8●●●H30 [31]
	10	1	30	SCG34S8●●●H30 [31]	SCW34S8●●●H30 [31]	SCA44S8●●●H30 [31]	SCA34S8●●●H30 [31]
	15	2	30	SDG36S8●●●H301	SDW36S8●●●H301	SDA46S8●●●H301	SDA36S8●●●H301
	25	2	60	SDG34S8●●●H30 [31]	SDW34S8●●●H30 [31]	SDA44S8●●●H30 [31]	SDA34S8●●●H30 [31]

NOTE: Some control transformers may require the use of oversized enclosures. Refer to

Table 16.138: Coil Voltage Codes

Voltage		Code
60 Hz	50 Hz	
24[32]	—	V01
120[33]	110	V02
208	—	V08
240	220	V03
277	—	V04
480	440	V06
600	550	V07
Specify	Specify	V99

NOTE: For voltage codes used with control transformers, see .

Table 16.139: Class 8538 Fusible Disconnect Switch Type for Horizontal Mounting [30] (replace ●●● with the voltage code)[26]

Ratings				NEMA 12/3R [27] Dusttight and Driptight Industrial Use Enclosure	
				With External Reset	Without External Reset
Motor Voltage (Starter Voltage)	Max. Hp Polyphase	NEMA Size	Fuse Clip Size (A)	Type [28]	Type [28]
200 (208)	2	1	30	SCA22S1●●●H30	SCA12S1●●●H30
	7-1/2	1	60	SCA23S1●●●H30	SCA13S1●●●H30
230 (240)	2	1	30	SCA22S1●●●H30	SCA12S1●●●H30
	7-1/2	1	60	SCA23S1●●●H30	SCA13S1●●●H30
460 (480)	10	1	30	SCA24S1●●●H30	SCA14S1●●●H30
575 (600)	10	1	30	SCA24S1●●●H30	SCA14S1●●●H30

[26] To order melting alloy overload relay, remove form "H30" from part number.
[27] NEMA 12 enclosures can be field modified for outdoor non-corrosive and non–service entrance rated applications. See page 16-112 for more information.
[28] Replace the three bullets (●●●) in the catalog number with the coil voltage code. Refer to the standard coil voltage codes shown in Table 16.138.
[29] For Size 3–5 starters in oversized NEMA 1, 4 or 12 enclosures, contact the factory for pricing and TAG number.
[30] Not included in the Laser™ Delivery program.
[31] **Form H30**, with the possibility of a fourth character to select a lower FLA range (for example, **H308**). See "Solid-State Overload Relay Forms" on page 16-119
[32] 24 V coils are not available on Sizes 4–7. On Sizes 00–3, where 24 V coils are available, **Form S** (separate control) must be specified (for example, order as 8538SBG1158V01S).
[33] These voltage codes must include **Form S** (provided at no charge). When specifying **Form S,** supply motor voltage when ordering (for example, order as 8538SCG1158V02S).

© 2019 Schneider Electric
All Rights Reserved
11/20/2019

Courtesy of Steven Engineering, Inc - (800) 258-9200 - sales@steveneng.com - www.stevenengineering.com

For How to Order Information, see page 16-28.

Electronic Motor Circuit Protector (MCP)
3-Pole Polyphase—600 Vac Maximum—50–60 Hz

For Form H30• (special lower-FLA factory-assembled starter combinations with Motor Logic SSOLR protection), see Solid-State Overload Relay Forms, page 16-119.

Table 16.140: Class 8539 Full Voltage Type, Non-Reversing, 200–240 V, with Motor Logic SSOLR (replace ●●● with the voltage code) *[34]*

Ratings				NEMA 1 General Purpose Enclosure	NEMA 4 & 4X Watertight and Dusttight Stainless Steel (304) Enclosure (Sizes 0–5) *[35]*	NEMA 4 & 4X Watertight, Dusttight, and Corrosion Resistant Polyester Enclosure	NEMA 12/3R *[36]* Dusttight and Driptight Industrial Use Enclosure	
Motor Voltage (Starter Voltage)	Hp Range Polyphase	NEMA Size	Circuit Breaker (See Page 7-32 for Breaker Adjustment Range)	Type *[37]*	Type *[37]*	Type *[37]*	With External Reset Type *[37]*	Without External Reset Type *[37]*
200 (208)	0.25–3	0	HLL36030M71	SBG43●●●H30 *[38]*	SBW43●●●H30 *[38]*	SBW53●●●H30 *[38]*	SBA53●●●H30 *[38]*	SBA43●●●H30 *[38]*
	0.25–5 7.5	1	HLL36030M71 HLL36050M72	SCG44●●●H30 *[38]* SCG45●●●H30 *[38]*	SCW44●●●H30 *[38]* SCW45●●●H30 *[38]*	SCW54●●●H30 *[38]* SCW55●●●H30 *[38]*	SCA54●●●H30 *[38]* SCA55●●●H30 *[38]*	SCA44●●●H30 *[38]* SCA45●●●H30 *[38]*
	1.5–5 7.5–10	2	HLL36030M71 HLL36050M72	SDG42●●●H301 SDG43●●●H30 *[38]*	SDW42●●●H301 SDW43●●●H30 *[38]*	SDW52●●●H301 SDW53●●●H30 *[38]*	SDA52●●●H301 SDA53●●●H30 *[38]*	SDA42●●●H301 SDA43●●●H30 *[38]*
	15–25	3	HLL36100M73	SEG42●●●H30	SEW42●●●H30	SEW52●●●H30	SEA52●●●H30	SEA42●●●H30
	30–40	4	JLL36250M75	SFG44●●●H30	SFW44●●●H30	SFW54●●●H30	SFA54●●●H30	SFA44●●●H30
	50–60 75	5	JLL36250M75 LJL36400M36	SGG44●●●H30 SGG45●●●H30	SGW44●●●H30 SGW45●●●H30	— —	SGA54●●●H30 SGA55●●●H30	SGA44●●●H30 SGA45●●●H30
	100 125–150	6	LJL36400M36 LJL36600M42	SHG43●●●H30 SHG45●●●H30	SHW43●●●H30 SHW45●●●H30	— —	SHA53●●●H30 SHA55●●●H30	SHA43●●●H30 SHA45●●●H30
230 (240)	0.25–3	0	HLL36030M71	SBG43●●●H30 *[38]*	SBW43●●●H30 *[38]*	SBW53●●●H30 *[38]*	SBA53●●●H30 *[38]*	SBA43●●●H30 *[38]*
	0.25–7.5	1	HLL36030M71	SCG44●●●H30 *[38]*	SCW44●●●H30 *[38]*	SCW54●●●H30 *[38]*	SCA54●●●H30 *[38]*	SCA44●●●H30 *[38]*
	1.5–7.5 10 15	2	HLL36030M71 HLL36050M72 HLL36100M73	SDG42●●●H301 SDG43●●●H30 *[38]* SDG44●●●H30 *[38]*	SDW42●●●H301 SDW43●●●H30 *[38]* SDW44●●●H30 *[38]*	SDW52●●●H301 SDW53●●●H30 *[38]* SDW54●●●H30 *[38]*	SDA52●●●H301 SDA53●●●H30 *[38]* SDA54●●●H30 *[38]*	SDA42●●●H301 SDA43●●●H30 *[38]* SDA44●●●H30 *[38]*
	15–30	3	HLL36100M73	SEG42●●●H30	SEW42●●●H30	SEW52●●●H30	SEA52●●●H30	SEA42●●●H30
	40–50	4	JLL36250M75	SFG44●●●H30	SFW44●●●H30	SFW54●●●H30	SFA54●●●H30	SFA44●●●H30
	60 75–100	5	JLL36250M75 LJL36400M36	SGG44●●●H30 SGG46●●●H30	SGW44●●●H30 SGW45●●●H30	— —	SGA54●●●H30 SGA55●●●H30	SGA44●●●H30 SGA45●●●H30
	125–150 200	6	LJL36600M42 PLL34080M68	SHG45●●●H30 SHG46●●●H30	SHW45●●●H30 SHW46●●●H30	— —	SHA55●●●H30 SHA56●●●H30	SHA45●●●H30 SHA46●●●H30
	250–300	7	PLL36100M69	SJG43●●●H30	SJW43●●●H30	—	SJA53●●●H30	—

NEMA Type 1 Enclosure with 30 mm Operators

3 or 5 Days Laser Delivery

Refer to page 16-31 for details.

NOTE: Some control transformers may require the use of oversized enclosures. Refer to Control Transformer Selection, page 16-57.

Table 16.141: Coil Voltage Codes

Voltage		Code
60 Hz	50 Hz	
24 *[39]*	—	V01
120 *[40]*	110	V02
208	—	V08
240	220	V03
277	—	V04
480	440	V06
600	550	V07
Specify	Specify	V99

NOTE: For voltage codes used with control transformers, see page 16-118.
Form S (separate control) is used when a separate source of power is available for the control (coil) voltage. Form S is available at no charge.

Dimensions: page 16-58
Factory Modifications (Forms): page 16-117
Replacement Parts (Class 9998): page 16-122
Type S Accessories (Class 9999): page 16-125

For How to Order Information, see page 16-28.

[34] To order melting alloy overload relay, remove form "H30" from part number.
[35] Size 6 and 7 are NEMA 4 sheet steel enclosures.
[36] NEMA 12 enclosures can be field modified for outdoor non-corrosive and non–service entrance rated applications. See page 16-112 for more information.
[37] Replace the three bullets (●●●) in the catalog number with the coil voltage code. Refer to the standard coil voltage codes shown in Table 16.141.
[38] **Form H30**, with the possibility of a fourth character to select a lower FLA range (for example, **H308**). See "Solid-State Overload Relay Forms" on page 16-119
[39] 24 V coils are not available on Sizes 4–7. On Sizes 00–3, where 24 V coils are available, **Form S** (separate control) must be specified (for example, order as 8539SBG41V01S).
[40] These voltage codes must include **Form S** (supplied at no charge). When specifying **Form S,** please supply motor voltage when ordering (for example, order as 8539SCG41V02S).

© 2019 Schneider Electric
All Rights Reserved
11/20/2019

Courtesy of Steven Engineering, Inc - (800) 258-9200 - sales@steveneng.com - www.stevenengineering.com

For Form H30• (special lower-FLA factory-assembled starter combinations with Motor Logic SSOLR protection), see Solid-State Overload Relay Forms, page 16-119.

Table 16.142: Class 8539 Full Voltage Type, Non-Reversing, 460–600 V, with Motor Logic SSOLR and Electronic Motor Circuit Protector (MCP) (replace ●●● with the voltage code)*[41]*

Ratings				NEMA 1 General Purpose Enclosure	NEMA 4 & 4X Watertight and Dusttight Enclosure, Stainless Steel (304) (Sizes 0–5) *[42]*	NEMA 4 & 4X Watertight, Dusttight, and Corrosion Resistant Polyester Enclosure	NEMA 12/3R*[43]* Dusttight and Driptight Industrial Use Enclosure	
Motor Voltage (Starter Voltage)	Hp Range Polyphase	NEMA Size	Circuit Breaker (See Page 7-32 for Breaker Adjustment Range)	Type *[44]*	Type *[44]*	Type *[44]*	With External Reset Type *[44]*	Without External Reset Type *[44]*
460 (480)	0.25–5	0	HLL36030M71	SBG43●●●H30 *[45]*	SBW43●●●H30 *[45]*	SBW53●●●H30 *[45]*	SBA53●●●H30 *[45]*	SBA43●●●H30 *[45]*
	0.25–10	1	HLL36030M71	SCG44●●●H30 *[45]*	SCW44●●●H30 *[45]*	SCW54●●●H30 *[45]*	SCA54●●●H30 *[45]*	SCA44●●●H30 *[45]*
	5–15 20–25	2	HLL36030M71 HLL36050M72	SDG42●●●H301 SDG43●●●H30	SDW42●●●H301 SDW43●●●H30 *[45]*	SDW52●●●H301 SDW53●●●H30 *[45]*	SDA52●●●H301 SDA53●●●H30 *[45]*	SDA42●●●H301 SDA43●●●H30 *[45]*
	20–25 30–50	3	HLL36050M72 HLL36100M73	SEG41●●●H30 SEG42●●●H30	SEW41●●●H30 SEW42●●●H30	SEW51●●●H30 SEW52●●●H30	SEA51●●●H30 SEA52●●●H30	SEA41●●●H30 SEA42●●●H30
	60–100	4	JLL36250M75	SFG44●●●H30	SFW44●●●H30	SFW54●●●H30	SFA54●●●H30	SFA44●●●H30
	125 150–200	5	JLL36250M75 LJL36400M36	SGG44●●●H30 SGG45●●●H30	SGW44●●●H30 SGW45●●●H30	— —	SGA54●●●H30 SGA55●●●H30	SGA44●●●H30 SGA45●●●H30
	250–350 400	6	LJL36600M42 PLL34080M68	SHG45●●●H30 SHG46●●●H30	SHW45●●●H30 SHW46●●●H30	— —	SHA55●●●H30 SHA56●●●H30	SHA45●●●H30 SHA46●●●H30
	500 600	7	PLL36080M68 PLL36100M69	SJG42●●●H30 SJG43●●●H30	SJW42●●●H30 SJW43●●●H30	— —	SJA52●●●H30 SJA53●●●H30	— —
575 (600)	0.25–5	0	HLL36030M71	SBG43●●●H30 *[45]*	SBW43●●●H30 *[45]*	SBW53●●●H30 *[45]*	SBA53●●●H30 *[45]*	SBA43●●●H30 *[45]*
	0.25–10	1	HLL36030M71	SCG44●●●H30 *[45]*	SCW44●●●H30 *[45]*	SCW54●●●H30 *[45]*	SCA54●●●H30 *[45]*	SCA44●●●H30 *[45]*
	5–20 25	2	HLL36030M71 HLL36050M72	SDG42●●●H301 SDG43●●●H30 *[45]*	SDW42●●●H301 SDW43●●●H30 *[45]*	SDW52●●●H301 SDW53●●●H30 *[45]*	SDA52●●●H301 SDA53●●●H30 *[45]*	SDA42●●●H301 SDA43●●●H30 *[45]*
	25–30 40–50	3	HLL36050M72 HLL36100M73	SEG41●●●H30 SEG42●●●H30	SEW41●●●H30 SEW42●●●H30	SEW51●●●H30 SEW52●●●H30	SEA51●●●H30 SEA52●●●H30	SEA41●●●H30 SEA42●●●H30
	60–100	4	JLL36250M75	SFG44●●●H30	SFW44●●●H30	SFW54●●●H30	SFA54●●●H30	SFA44●●●H30
	125–150 200	5	JLL36250M75 LJL36400M36	SGG44●●●H30 SGG45●●●H30	SGW44●●●H30 SGW45●●●H30	— —	SGA54●●●H30 SGA55●●●H30	SGA44●●●H30 SGA45●●●H30
	250 300–400	6	LJL36400M36 LJL36600M42	SHG43●●●H30 SHG45●●●H30	SHW43●●●H30 SHW45●●●H30	— —	SHA53●●●H30 SHA55●●●H30	SHA43●●●H30 SHA45●●●H30
	500–600	7	PLL34100M69	SJG41●●●H30	SJW41●●●H30	—	SJA51●●●H30	—

NOTE: Some control transformers may require the use of oversized enclosures. Refer to .

Table 16.143: Coil Voltage Codes

Voltage		Code
60 Hz	50 Hz	
24*[46]*	—	V01
120*[47]*	110	V02
208	—	V08
240	220	V03
277	—	V04
480	440	V06
600	550	V07
Specify	Specify	V99

NOTE: For voltage codes used with control transformers, see .
Form S (separate control) is used when a separate source of power is available for the control (coil) voltage. Form S is available at no charge.

Dimensions: page 16-58
Factory Modifications (Forms): page 16-117
Replacement Parts (Class 9998): page 16-92
Type S Accessories (Class 9999): page 16-125

For How to Order Information, see page 16-28.

NEMA Size 0–2 in Oversized Enclosure
3-Pole Polyphase—600 Vac Maximum—50–60 Hz

For Form H30• (special lower-FLA factory-assembled starter combinations with Motor Logic SSOLR protection), see Solid-State Overload Relay Forms, page 16-119.

Table 16.144: Class 8539 Electronic Motor Circuit Protectors (MCP) in Oversized Enclosure, NEMA Size 0–2*[41][48][49]*
Full Voltage Type, Non-Reversing with Motor Logic SSOLR (replace ●●● with the voltage code)

Ratings				NEMA 1 General Purpose Enclosure	NEMA 4 & 4X Watertight and Dusttight Stainless Steel (304) Enclosure	NEMA 12/3R*[43]* Dusttight and Driptight Industrial Use Enclosure	
Motor Voltage (Starter Voltage)	Hp Range Polyphase	NEMA Size	Circuit Breaker (See Page 7-32 for Breaker Adjustment Range)	Type *[44]*	Type *[44]*	With External Reset Type *[44]*	Without External Reset Type *[44]*
200 (208)	0.25–3	0	HLL36030M71	SBG43S8●●●H30*[45]*	SBW43S8●●●H30*[45]*	SBA53S8●●●H30*[45]*	SBA43S8●●●H30*[45]*
	0.25–5	1	HLL36030M71	SCG44S8●●●H30*[45]*	SCW44S8●●●H30*[45]*	SCA54S8●●●H30*[45]*	SCA44S8●●●H30*[45]*

[41] To order melting alloy overload relay, remove form "H30" from part number.
[42] Size 6 and 7 are NEMA 4 only, painted sheet steel enclosures.
[43] NEMA 12 enclosures can be field modified for outdoor non-corrosive and non–service entrance rated applications. See page 16-112 for more information.
[44] Replace the three bullets (●●●) in the catalog number with the coil voltage code. Refer to the standard coil voltage codes shown in Table 16.143.
[45] **Form H30**, with the possibility of a fourth character to select a lower FLA range (for example, **H308**). See "Solid-State Overload Relay Forms" on page 16-119
[46] 24 V coils are not available on Sizes 4–7. On Sizes 00–3, where 24 V coils are available, **Form S** (separate control) must be specified (i.e., order as 8539SBG41V01S).
[47] These voltage codes must include **Form S** (furnished at no charge). When specifying **Form S,** please include the motor voltage when ordering (for example, order as 8539SCG41V02S).
[48] Not included in the Laser™ Delivery program.
[49] For NEMA Size 3–5 starters in oversized NEMA 1, 4 or 12 enclosures, contact factory for pricing and TAG number.

© 2019 Schneider Electric
All Rights Reserved
11/20/2019

Courtesy of Steven Engineering, Inc - (800) 258-9200 - sales@steveneng.com - www.stevenengineering.com

Table 16.144 Class 8539 Electronic Motor Circuit Protectors (MCP) in Oversized Enclosure, NEMA Size 0–2*[16.144][16.144]NEMASize0-2inOversizedEnclosure3-PolePolyphase-600VacMax_1602_18[16.144]***Full Voltage Type, Non-Reversing with Motor Logic SSOLR (replace ●●● with the voltage code) (cont'd.)**

Ratings				NEMA 1 General Purpose Enclosure	NEMA 4 & 4X Watertight and Dusttight Stainless Steel (304) Enclosure	NEMA 12/3R[58] Dusttight and Driptight Industrial Use Enclosure	
Motor Voltage (Starter Voltage)	Hp Range Polyphase	NEMA Size	Circuit Breaker (See Page 7-32 for Breaker Adjustment Range)			With External Reset	Without External Reset
				Type [59]	Type [59]	Type [59]	Type [59]
	7.5		HLL36050M72	SCG45S8●●●H30[50]	SCW45S8●●●H30[50]	SCA55S8●●●H30[50]	SCA45S8●●●H30[50]
	1.5–5 7.5–10	2	HLL36030M71 HLL36050M72	SDG42S8●●●H301 SDG43S8●●●H30[50]	SDW42S8●●●H301 SDW43S8●●●H30[50]	SDA52S8●●●H301 SDA53S8●●●H30[50]	SDA42S8●●●H301 SDA43S8●●●H30[50]
230 (240)	0.25–3	0	HLL36030M71	SBG43S8●●●H30[50]	SBW43S8●●●H30[50]	SBA53S8●●●H30[50]	SBA43S8●●●H30[50]
	0.25–7.5	1	HLL36030M71	SCG44S8●●●H30[50]	SCW44S8●●●H30[50]	SCA54S8●●●H30[50]	SCA44S8●●●H30[50]
	1.5–7.5 10 15	2	HLL36030M71 HLL36050M72 HLL36100M73	SDG42S8●●●H301 SDG43S8●●●H30[50] SDG44S8●●●H30[50]	SDW42S8●●●H301 SDW43S8●●●H30[50] SDW44S8●●●H30[50]	SDA52S8●●●H301 SDA53S8●●●H30[50] SDA54S8●●●H30[50]	SDA42S8●●●H301 SDA43S8●●●H30[50] SDA44S8●●●H30[50]
460 (480)	0.25–5	0	HLL36030M71	SBG43S8●●●H30[50]	SBW43S8●●●H30[50]	SBA53S8●●●H30[50]	SBA43S8●●●H30[50]
	0.25–10	1	HLL36030M71	SCG44S8●●●H30[50]	SCW44S8●●●H30[50]	SCA54S8●●●H30[50]	SCA44S8●●●H30[50]
	5–15 20–25	2	HLL36030M71 HLL36050M72	SDG42S8●●●H301 SDG43S8●●●H30[50]	SDW42S8●●●H301 SDW43S8●●●H30[50]	SDA52S8●●●H301 SDA53S8●●●H30[50]	SDA42S8●●●H301 SDA43S8●●●H30[50]
575 (600)	0.25–5	0	HLL36060M71	SBG43S8●●●H30[50]	SBW43S8●●●H30[50]	SBA53S8●●●H30[50]	SBA43S8●●●H30[50]
	0.25–10	1	HLL36030M71	SCG44S8●●●H30[50]	SCW44S8●●●H30[50]	SCA54S8●●●H30[50]	SCA44S8●●●H30[50]
	5–20 25	2	HLL36030M71 HLL36050M72	SDG42S8●●●H301 SDG43S8●●●H30[50]	SDW42S8●●●H301 SDW43S8●●●H30[50]	SDA52S8●●●H301 SDA53S8●●●H30[50]	SDA42S8●●●H301 SDA43S8●●●H30[50]

NOTE: Some control transformers may require the use of oversized enclosures. Refer to .

Table 16.145: Coil Voltage Codes

Voltage		Code
60 Hz	50 Hz	
24[56]	—	V01
120[57]	110	V02
208	—	V08
240	220	V03
277	—	V04
480	440	V06
600	550	V07
Specify	Specify	V99

NOTE: For voltage codes used with control transformers, see page 16-118.
Form S (separate control) is used when a separate source of power is available for the control (coil) voltage. Form S is available at no charge.

Dimensions: page 16-58
Factory Modifications (Forms): page 16-117
Replacement Parts (Class 9998): page 16-122
Type S Accessories (Class 9999): page 16-125

For How to Order Information, see page 16-28.

[58] NEMA 12 enclosures can be field modified for outdoor non-corrosive and non–service entrance rated applications. See page 16-112 for more information.
[59] Replace the three bullets (●●●) in the catalog number with the coil voltage code. Refer to the standard coil voltage codes shown in Table 16.145.
[50] **Form H30**, with the possibility of a fourth character to select a lower FLA range (for example, **H308**). See "Solid-State Overload Relay Forms" on page 16-119
[56] 24 V coils are not available on Sizes 4–7. On Sizes 00–3, where 24 V coils are available, **Form S** (separate control) must be specified (for example, order as 8539SBG41S8V01S).
[57] These voltage codes must include **Form S** (provided at no charge). When specifying **Form S,** please include the motor voltage when ordering (for example, order as 8539SCG41S8V02S).

© 2019 Schneider Electric
All Rights Reserved
11/20/2019

Courtesy of Steven Engineering, Inc - (800) 258-9200 - sales@steveneng.com - www.stevenengineering.com

Thermal Magnetic Circuit Breaker

Full Voltage Type
3-Pole Polyphase—600 Vac Maximum—50–60 Hz

For Form H30• (special lower-FLA factory-assembled starter combinations with Motor Logic SSOLR protection), see Solid-State Overload Relay Forms, page 16-119.

Table 16.146: Class 8539 Full Voltage, Thermal-Magnetic Circuit Breaker Type, Non-Reversing, with Motor Logic SSOLR (replace ●●● with the voltage code)*[58]*

Ratings					NEMA 1 General Purpose Enclosure	NEMA 4 & 4X Watertight and Dusttight Enclosure Stainless Steel (304) (Sizes 0–5)*[59]*	NEMA 4 & 4X Watertight, Dusttight and Corrosion Resistant Polyester Enclosure	NEMA 12/3R*[60]* Dusttight and Driptight Industrial Use Enclosure	
Motor Voltage (Starter Voltage)	Max. Hp Polyphase	NEMA Size	Circuit Breaker Type	Circuit Breaker Ampere Rating	Type *[61]*	Type *[61]*	Type *[61]*	With External Reset Type *[61]*	Without External Reset Type *[61]*
200 (208)	2 3	0	HLL36015 HLL36020	15 20	SBG1●●●H30 *[62]* SBG3●●●H30 *[62]*	SBW1●●●H30 *[62]* SBW3●●●H30 *[62]*	SBW11●●●H30 *[62]* SBW13●●●H30 *[62]*	SBA11●●●H30 *[62]* SBA13●●●H30 *[62]*	SBA1●●●H30 *[62]* SBA3●●●H30 *[62]*
	5 7-1/2	1	HLL36035 HLL36050	35 50	SCG5●●●H30 *[62]* SCG2●●●H30 *[62]*	SCW5●●●H30 *[62]* SCW2●●●H30 *[62]*	SCW15●●●H30 *[62]* SCW12●●●H30 *[62]*	SCA15●●●H30 *[62]* SCA12●●●H30 *[62]*	SCA5●●●H30 *[62]* SCA2●●●H30 *[62]*
	10	2	HLL36060	60	SDG1●●●H30 *[62]*	SDW1●●●H30 *[62]*	SDW11●●●H30 *[62]*	SDA11●●●H30 *[62]*	SDA1●●●H30 *[62]*
	15 20 25	3	HLL36100 HLL36125 HLL36150	100 125 150	SEG3●●●H30 SEG1●●●H30 SEG5●●●H30	SEW3●●●H30 SEW1●●●H30 SEW5●●●H30	SEW13●●●H30 SEW11●●●H30 SEW15●●●H30	SEA13●●●H30 SEA11●●●H30 SEA15●●●H30	SEA3●●●H30 SEA1●●●H30 SEA5●●●H30
	30 40	4	JLL36200 JLL36250	200 250	SFG3●●●H30 SFG4●●●H30	SFW3●●●H30 SFW4●●●H30	SFW13●●●H30 SFW14●●●H30	SFA13●●●H30 SFA14●●●H30	SFA3●●●H30 SFA4●●●H30
	50 60–75	5	JLL36250 LLL36400U33X	250 400	SGG6●●●H30 SGG4●●●H30	SGW6●●●H30 SGW4●●●H30	— —	SGA16●●●H30 SGA14●●●H30	SGA6●●●H30 SGA4●●●H30
	100–125 150	6	LLL36600U33X MJL36800	600 800	SHG4●●●H30 SHG5●●●H30	SHW4●●●H30 SHW5●●●H30	— —	SHA14●●●H30 SHA15●●●H30	SHA4●●●H30 SHA5●●●H30
230 (240)	2 3	0	HLL36015 HLL36020	15 20	SBG1●●●H30 *[62]* SBG3●●●H30 *[62]*	SBW1●●●H30 *[62]* SBW3●●●H30 *[62]*	SBW11●●●H30 *[62]* SBW13●●●H30 *[62]*	SBA11●●●H30 *[62]* SBA13●●●H30 *[62]*	SBA1●●●H30 *[62]* SBA3●●●H30 *[62]*
	5 7-1/2	1	HLL36035 HLL36045	35 45	SCG5●●●H30 *[62]* SCG6●●●H30 *[62]*	SCW5●●●H30 *[62]* SCW6●●●H30 *[62]*	SCW15●●●H30 *[62]* SCW16●●●H30 *[62]*	SCA15●●●H30 *[62]* SCA16●●●H30 *[62]*	SCA1●●●H30 *[62]* SCA6●●●H30 *[62]*
	10 15	2	HLL36060 HLL36090	60 90	SDG1●●●H30 *[62]* SDG7●●●H30 *[62]*	SDW1●●●H30 *[62]* SDW7●●●H30 *[62]*	SDW11●●●H30 *[62]* SDW17●●●H30 *[62]*	SDA11●●●H30 *[62]* SDA17●●●H30 *[62]*	SDA1●●●H30 *[62]* SDA7●●●H30 *[62]*
	20 25–30	3	HLL36100 HLL36150	100 150	SEG3●●●H30 SEG5●●●H30	SEW3●●●H30 SEW5●●●H30	SEW13●●●H30 SEW15●●●H30	SEA13●●●H30 SEA15●●●H30	SEA3●●●H30 SEA5●●●H30
	40 50	4	JLL36225 JLL36250	225 250	SFG1●●●H30 SFG4●●●H30	SFW1●●●H30 SFW4●●●H30	SFW11●●●H30 SFW14●●●H30	SFA11●●●H30 SFA14●●●H30	SFA1●●●H30 SFA4●●●H30
	60 75 100	5	JLL36250 LLL36400U33X LLL36600U33X	250 400 600	SGG6●●●H30 SGG4●●●H30 SGG2●●●H30	SGW6●●●H30 SGW4●●●H30 SGW2●●●H30	— — —	SGA16●●●H30 SGA14●●●H30 SGA12●●●H30	SGA6●●●H30 SGA4●●●H30 SGA2●●●H30
	125 150–200	6	LLL36600U33X MJL36800	600 800	SHG4●●●H30 SHG5●●●H30	SHW4●●●H30 SHW5●●●H30	— —	SHA14●●●H30 SHA15●●●H30	SHA4●●●H30 SHA5●●●H30
	250–300	7	PKL36100	1200	SJG3●●●H30	SJW3●●●H30	—	SJA13●●●H30	—

NOTE: Some control transformers may require the use of oversized enclosures. Refer to .

Table 16.147: Coil Voltage Codes

Voltage		Code
60 Hz	50 Hz	
24*[63]*	—	V01
120*[64]*	110	V02
208	—	V08
240	220	V03
277	—	V04
480	440	V06
600	550	V07
Specify	Specify	V99

NOTE: For voltage codes used with control transformers, see page 16-118. Form S (separate control) is used when a separate source of power is available for the control (coil) voltage. Form S is provided at no charge.

Dimensions: page 16-58
Factory Modifications (Forms): page 16-117
Replacement Parts (Class 9998): page 16-122
Type S Accessories (Class 9999): page 16-125

For How to Order Information, see page 16-28.

[58] To order melting alloy overload relay, remove form "H30" from part number.
[59] Size 6 and 7 are NEMA 4 only, painted sheet steel enclosures.
[60] NEMA 12 enclosures can be field modified for outdoor non-corrosive and non–service entrance rated applications. See page 16-112 for more information.
[61] Replace the three bullets (●●●) in the catalog number with the coil voltage code. Refer to the standard coil voltage codes listed in Table 16.147.
[62] **Form H30**, with the possibility of a fourth character to select a lower FLA range (for example, **H308**). See "Solid-State Overload Relay Forms" on page 16-119
[63] 24 V coils are not available on Sizes 4–7. On Sizes 00–3, where 24 V coils are available, **Form S** (separate control) must be specified (for example, order as 8539SBG1V01S).
[64] These voltage codes must include **Form S** (provided at no charge). When specifying **Form S,** please include the motor voltage when ordering (for example, order as 8539SCG5V02S).

© 2019 Schneider Electric
All Rights Reserved
11/20/2019

Courtesy of Steven Engineering, Inc - (800) 258-9200 - sales@steveneng.com - www.stevenengineering.com

Line Voltage Type
3-Pole Polyphase—600 Vac Maximum—50–60 Hz

For Form H30• (special lower-FLA factory-assembled starter combinations with Motor Logic SSOLR protection), see Solid-State Overload Relay Forms, page 16-119.

Table 16.148: Class 8539 Line Voltage, Thermal-Magnetic Circuit Breaker Type, Non-Reversing, with Motor Logic SSOLR (replace ●●● with the voltage code)*[65]*

Ratings					NEMA 1 General Purpose Enclosure	NEMA 4 & 4X Watertight and Dusttight Stainless Steel (304) Enclosure (Sizes 0–5)*[66]*	NEMA 4 & 4X Watertight, Dusttight and Corrosion Resistant Polyester Enclosure	NEMA 12/3R*[67]* Dusttight and Driptight Industrial Use Enclosure	
Motor Voltage (Starter Voltage)	Max. Hp Polyphase	NEMA Size	Circuit Breaker Type	Circuit Breaker Ampere Rating	Type *[68]*	Type *[68]*	Type *[68]*	With External Reset Type *[68]*	Without External Reset Type *[68]*
460 (480)	5	0	HLL36015	15	SBG1●●●H30 *[69]*	SBW1●●●H30 *[69]*	SBW11●●●H30 *[69]*	SBA11●●●H30 *[69]*	SBA1●●●H30 *[69]*
	7.5 10	1	HLL36025 HLL36030	25 30	SCG3●●●H30 *[69]* SCG7●●●H30 *[69]*	SCW3●●●H30 *[69]* SCW7●●●H30 *[69]*	SCW13●●●H30 *[69]* SCW17●●●H30 *[69]*	SCA13●●●H30 *[69]* SCA17●●●H30 *[69]*	SCA3●●●H30 *[69]* SCA7●●●H30 *[69]*
	15 20 25	2	HLL36045 HLL36060 HLL36070	45 60 70	SDG3●●●H30 *[69]* SDG1●●●H30 *[69]* SDG5●●●H30 *[69]*	SDW3●●●H30 *[69]* SDW1●●●H30 *[69]* SDW5●●●H30 *[69]*	SDW13●●●H30 *[69]* SDW11●●●H30 *[69]* SDW15●●●H30 *[69]*	SDA13●●●H30 *[69]* SDA11●●●H30 *[69]* SDA15●●●H30 *[69]*	SDA3●●●H30 *[69]* SDA1●●●H30 *[69]* SDA5●●●H30 *[69]*
	30 40 50	3	HLL36080 HLL36100 HLL36150	80 100 150	SEG7●●●H30 SEG3●●●H30 SEG5●●●H30	SEW7●●●H30 SEW3●●●H30 SEW5●●●H30	SEW17●●●H30 SEW13●●●H30 SEW15●●●H30	SEA17●●●H30 SEA13●●●H30 SEA15●●●H30	SEA7●●●H30 SEA3●●●H30 SEA5●●●H30
	60 75 100	4	JLL36150 JLL36200 JLL36250	150 200 250	SFG5●●●H30 SFG3●●●H30 SFG4●●●H30	SFW5●●●H30 SFW3●●●H30 SFW4●●●H30	SFW15●●●H30 SFW13●●●H30 SFW14●●●H30	SFA15●●●H30 SFA13●●●H30 SFA14●●●H30	SFA5●●●H30 SFA3●●●H30 SFA4●●●H30
	125–150 200	5	LLL36400U33X LLL36600U33X	400 600	SGG4●●●H30 SGG2●●●H30	SGW4●●●H30 SGW2●●●H30	— —	SGA14●●●H30 SGA12●●●H30	SGA4●●●H30 SGA2●●●H30
	250 300–400	6	LLL36600U33X MJL36800	600 800	SHG4●●●H30 SHG5●●●H30	SHW4●●●H30 SHW5●●●H30	— —	SHA14●●●H30 SHA15●●●H30	SHA4●●●H30 SHA5●●●H30
	500–600	7	PLL36120	1200	SJG3●●●H30	SJW3●●●H30	—	SJA13●●●H30	—
575 (600)	5	0	HLL36015	15	SBG1●●●H30 *[69]*	SBW1●●●H30 *[69]*	SBW11●●●H30 *[69]*	SBA11●●●H30 *[69]*	SBA1●●●H30 *[69]*
	7.5 10	1	HLL36020 HLL36025	20 25	SCG8●●●H30 *[69]* SCG3●●●H30 *[69]*	SCW8●●●H30 *[69]* SCW3●●●H30 *[69]*	SCW18●●●H30 *[69]* SCW13●●●H30 *[69]*	SCA18●●●H30 *[69]* SCA13●●●H30 *[69]*	SCA8●●●H30 *[69]* SCA3●●●H30 *[69]*
	15 20 25	2	HLL36035 HLL36045 HLL36060	35 45 60	SDG8●●●H301 SDG3●●●H30 *[69]* SDG1●●●H30 *[69]*	SDW8●●●H301 SDW3●●●H30 *[69]* SDW1●●●H30 *[69]*	SDW18●●●H301 SDW13●●●H30 *[69]* SDW11●●●H30 *[69]*	SDA18●●●H301 SDA13●●●H30 *[69]* SDA11●●●H30 *[69]*	SDA8●●●H301 SDA3●●●H30 *[69]* SDA1●●●H30 *[69]*
	30 40 50	3	HLL36070 HLL36090 HLL36100	70 90 100	SEG4●●●H30 SEG6●●●H30 SEG3●●●H30	SEW4●●●H30 SEW6●●●H30 SEW3●●●H30	SEW14●●●H30 SEW16●●●H30 SEW13●●●H30	SEA14●●●H30 SEA16●●●H30 SEA13●●●H30	SEA4●●●H30 SEA6●●●H30 SEA3●●●H30
	60–75 100	4	JLL36150 JLL36250	150 250	SFG5●●●H30 SFG4●●●H30	SFW5●●●H30 SFW4●●●H30	SFW15●●●H30 SFW14●●●H30	SFA15●●●H30 SFA14●●●H30	SFA5●●●H30 SFA4●●●H30
	125–150 200	5	JLL36250 LLL36400U33X	250 400	SGG6●●●H30 SGG4●●●H30	SGW6●●●H30 SGW4●●●H30	— —	SGA16●●●H30 SGA14●●●H30	SGA6●●●H30 SGA4●●●H30
	250–350 400	6	LLL36600U33X MJL36800	600 800	SHG4●●●H30 SHG5●●●H30	SHW4●●●H30 SHW5●●●H30	— —	SHA14●●●H30 SHA15●●●H30	SHA4●●●H30 SHA5●●●H30
	500–600	7	PKL36100	1200	SJG2●●●H30	SJW2●●●H30	—	SJA12●●●H30	—

Table 16.149: Class 8539 Thermal Magnetic Circuit Breaker Type, Single Phase*[70][71]* **with Melting Alloy Overload Relays**

Motor Voltage	Max. Hp	Coil Voltage	NEMA Size	Poles	Circuit Breaker (Type)	Ampere Rating	NEMA 1 General Purpose Enclosure Type	NEMA 4 & 4X Watertight and Dusttight Stainless Steel (304) Enclosure (Sizes 0–2) Type	NEMA 4 & 4X Watertight, Dusttight and Corrosion Resistant Polyester Enclosure Type	NEMA 12/3R*[67]* Dusttight and Driptight Industrial Use Enclosure With External Reset Type	NEMA 12/3R*[67]* Dusttight and Driptight Industrial Use Enclosure Without External Reset Type
120	1 2 3	120	0 1 2	2	HLL26030 HLL26050 HLL26080	30 50 80	SBG72V02 SCG72V02 SDG71V02	SBW72V02 SCW72V02 SDW71V02	SBW75V02 SCW75V02 SDW74V02	SBA75V02 SCA75V02 SDA74V02	SBA72V02 SCA72V02 SDA71V02
240	2 3 7.5	240	0 1 2	2	HLL26025 HLL26035 HLL26080	25 35 80	SBG71V03 SCG71V03 SDG71V03	SBW71V03 SCW71V03 SDW71V03	SBW74V03 SCW74V03 SDW74V03	SBA74V03 SCA74V03 SDA74V03	SBA71V03 SCA71V03 SDA71V03

3or5 Days Laser Delivery

NOTE: Some control transformers may require the use of oversized enclosures.
Refer to page 16-57.
For How to Order Information, see page 16-28.

[65] To order melting alloy overload relay, remove form "H30" from part number.
[66] Size 6 and 7 are NEMA 4 only, painted sheet steel enclosures.
[67] NEMA 12 enclosures can be field modified for outdoor non-corrosive and non–service entrance rated applications. See page 16-112 for more information.
[68] Replace the three bullets (●●●) in the catalog number with the coil voltage code. Refer to the standard coil voltage codes listed in Table 16.147.
[69] **Form H30**, with the possibility of a fourth character to select a lower FLA range (for example, **H308**). See "Solid-State Overload Relay Forms" on page 16-119
[70] Not included in the Laser™ Delivery program.
[71] Single-phase units require one thermal unit and are not available with Form H●● (solid-state overload relay).

© 2019 Schneider Electric
All Rights Reserved
11/20/2019

Courtesy of Steven Engineering, Inc - (800) 258-9200 - sales@steveneng.com - www.stevenengineering.com

Application Data

Table 16.150: Class 8539—UL Listed Short Circuit Ratings

Motor Circuit Protector Type			
NEMA Size	Enclosure	AIC at 480 Vac (RMS)	AIC at 600 Vac (RMS)
0, 1	Standard[72]	100,000	35,000
2 thru 5	Standard[72]	100,000	50,000
6	Standard[72]	65,000	18,000
7	Standard[72]	65,000	30,000

Table 16.151: Electronic Motor Circuit Protector (MCP) Selection by HP Ratings of Induction-type Squirrel-Cage Motors

3Ø, 60 Hz Voltages				Full-Load (A)	Suffix
200 Vac	230 Vac	460 Vac	575 Vac		
.5–5	.5–7.5	.75–15	1–20	1.5–25	M71
5–10	5–15	10–30	15–40	14–42	M72
10–25	15–30	25–60	30–75	30–80	M73
20–40	25–50	50–100	60–125	58–130	M74
40–60	50–75	100–150	125–200	114–217	M75

NOTE: The MCP adjustable trip range is determined by the suffix of the circuit breaker catalog number. This table indicates the trip range which corresponds to a given suffix number. The MCP motor circuit protector should be adjusted to a level just above locked-rotor current of the motor. This setting will provide optimum overcurrent protection for the motor. For more information on MCP instantaneous-trip circuit breakers, refer to the MCP circuit breaker section of this catalog.

Table 16.152: Class 8539, UL Listed Short Circuit Ratings

Thermal Magnetic Circuit Breaker Type			
NEMA Size	Enclosure	AIC at 480 Vac (RMS)	AIC at 600 Vac (RMS)
0, 1	Standard [72]	100,000	35,000
2 thru 5	Standard [72]	100,000	50,000
6	Standard [72]	65,000	18,000
7	Standard [72]	65,000	30,000

Table 16.153: Class 8538—UL Listed Short Circuit Ratings

NEMA Size	NEMA Fuse Class	Enclosure	Available Amperes RMS Symmetrical
0–3	Class H or K	Standard [73]	5,000
0–3	Class R/J	Standard[73]	100,000
0–2	Class H or K	Oversize	5,000
0–2	Class R/J	Standard	100,000
4–5	Class H or K	Standard [73]	10,000
4–5	Class R/J	Standard [73]	100,000
6	Class H or K	Standard [73]	18,000
6	Class R/J	Standard[73]	100,000

Table 16.154: 2: Motor Code Letter Table

Horsepower	Motor Code Letters
1/2 or less	A-L
3/4–1-1/2	A-K
2–3	A-J
5–25	A-H
30–125	A-G
150 or more	A-F

NOTE: The combination starter selection tables on page 16-51 to page 16-52 are suitable for motors with locked-rotor current letters according to NEC Table 430-7(b) as listed in Table 16.154. For other motors, a special thermal-magnetic circuit breaker with adjustable magnetic trip settings for the specific motor is required. When ordering for these special applications, specify the motor horsepower, voltage, frequency, full-load current, and code letter (or locked rotor current) to help ensure proper protection.

Table 16.155: Terminals

NEMA Size	Type	Line Terminals on Disconnect			Power Terminals On Magnetic Starter			Control Terminals On Magnetic Starter		
		Type of Lug	Wire Range		Type of Lug	Wire Range	Wires Per Terminal	Type of Lug	Wire Range	Wires Per Terminal
			Switch	Circuit Breaker						
0 & 1	SB & SC	Box Lug	14–1/0 Cu/Al	(1) 14-3/0 Al or Cu	Pressure Wire	14–8 Cu	1 or 2	Pressure Wire	16–12 Cu	2
2	SD	Box Lug	14–1/0 Cu/Al	(1) 14-3/0 Al or Cu	Box Lug	14–4 Cu	1	Pressure Wire	16–12 Cu	2
3	SE	Box Lug	14–1/0 Cu/Al	(1) 14-3/0 Al or Cu	Box Lug	14–0 Cu	1	Pressure Wire	16–12 Cu	2
4	SF	Box Lug	6–300 MCM Cu/Al	(1) 4-4/0 Al or Cu (JLL Breaker 150 A - 175 A) (1) 3/0 - 350 MCM Al or Cu (JLL Breaker 200 A - 250 A)	Box Lug	8–250 MCM Cu	1	Pressure Wire	16–12 Cu	2
5	SG	Box Lug	One 4–500 MCM Cu	(1) 2 - 500 MCM Al or (1) 2 - 350 MCM Cu (DJL36400 Breaker) (2) 2/0 - 500 MCM Al or (2) 2/0 - 350 MCM Cu (DLL36600 Breaker) (1) 3/0 - 350 MCM Al or (1) 3/0 - 350 MCM Cu (JLL36250 Breaker)	Box Lug	4–500 MCM Cu	1	Pressure Wire	16–12 Cu	2
6	SH	Box Lug	—	(2) 2/0 - 500 MCM Al or (2) 2/0 - 350 MCM Cu (DJL36600 Breaker, DLL Breaker) (1) 2 - 600 MCM Al or (1) 2 - 350 MCM Cu (DJL36400 Breaker) (3) 3/0 - 500 MCM Al or (3) 3/0 - 350 MCM Cu (MJL36800 Breaker) (3) 3/0 - 500 MCM Al or (3) 3/0 - 350 MCM Cu (PLL34080M68 Breaker)	Parallel Groove	250–500 MCM Cu [74]	1 or 2	Pressure Wire	16–12 Cu [75]	2
7	SJ	Box Lug	—	(4) 3/0 - 300 MCM Al or CU (PJL, PKL, PLL Breaker)	Parallel Groove	250–500 MCM Cu	1–4	Pressure Wire	16–12 Cu	2

[72] Standard enclosure includes: NEMA 1, 4 and 4X stainless, and 12/3R.
[73] Standard enclosure includes non-oversize NEMA 1, 4 and 4X stainless, and 12.
[74] Order Class 9999 Type SCU6 parts kit to convert power terminals to accept sizes 2/0–300 MCM wire.
[75] Terminal block range limited to 16–14.

© 2019 Schneider Electric
All Rights Reserved
11/20/2019

Courtesy of Steven Engineering, Inc - (800) 258-9200 - sales@steveneng.com - www.stevenengineering.com

Accessories—Interlocks and Control Transformers

A one or twopole electrical interlock can be added to the disconnect switch or circuit breaker. So if a separate control circuit is used, the magnetic starter can be de-energized when the disconnect is switched to the Off position. See Table 16.156 for proper interlock selection.
For electrical ratings of disconnect and circuit breaker interlocks, see Table 16.157.

An electrical interlock may also be factory installed in either a disconnect switch or circuit breaker combination starter. Specify **Form Y74** for single-pole or **Form Y75** for two-pole interlocks.

Table 16.156: Disconnect Switch and Breaker Interlocks

Class	Type	SPDT (Y74) Class 9999 Type	DPDT (Y75) Class 9999 Type
8538 *[76]*	SB, SC, SD (Series B)	R6	R7
8538, 8738	SD (Series C)	R43	R44
	SB, SC (Series C)	R45	R46
	SE, SF (Series A)	R8	R9
	SE (Series B & C)	R41	R42
	SF (Series B & C)	R39	R40
	SG	R35	R36
8539, 8739	SB, SC, SD, SE, SF, SG (Series K)	R26	R27
8538	SBA, SCA, SBG, SCG (Series D and above)	TC11	TC21
8538	SBAS8, SCAS8, SBGS8, SCGS8 (Series D and above)	TC10	TC20
8738	SBAS8, SCAS8, SBGS8, SCGS8 (Series E and above)	TC10	TC20
8738	SBA, SCA, SBG, SCG (Series E and above)	TC11	TC21
8538	SDA, SDA*[76]*, SDG, SDG*[76]* (Series D and above)	TC10	TC20
8738	SDA, SDG (Series E and above)	TC10	TC20
8538, 8738	SEA, SEG (Series D and above)	TC10	TC20

Table 16.157: Disconnect Switch and Breaker Interlock Electrical Ratings

Class 9999 Type R6, 8, 26, 35, 39, 41, 43, 45, TC10, & TC11 — AC—50 or 60 Hz				Class 9999 Type R7, 9, 27, 36, 40, 42, 44, 46 & TC 20, 21 — AC—50 or 60 Hz					
Volts	Maximum Current Make (A)	Maximum Current Break (A)	Continuous Carrying Current (A)	Volts	Maximum Current Make (A)	Maximum Current Make VA	Maximum Current Break (A)	Maximum Current Break VA	Continuous Carrying Current (A)
120	40	15	15	120	30	3450	3	345	10
240	20	10	15	240	15	3450	1.5	345	10
480	10	6	15	480	7.5	3450	0.75	345	10
600	8	5	15	600	6	3450	0.6	345	10

Table 16.158: Control Transformer Selection

NEMA Size	Starter Type	Standard Capacity (Form FF4T)	Additional Capacity 50 VA (Form FF4T10)	Additional Capacity 100 VA (Form FF4T11)	Additional Capacity 200 VA (Form FF4T12)
		Class 9070 Type *[77]*			
0 & 1	SB & SC	TF100	TF150	TF200	TF300 *[78][79]*
2	SD	TF100	TF150	TF200	TF300
3	SE	TF150	TF200	TF300	TF500
4	SF	TF300	TF300	TF500	T500
5	SG	TF100 and 8501XO20	TF100 and 8501XO20	TF150 and 8501XO20	TF300 and 8501XO20
6	SH	EO3S2 is standard	N/A	EO3FS2 and T100	EO3S2 and TF200
7	SJ	EO19S2 is standard	N/A	EO19S2 and TF100	EO3S2 and TF200

NOTE: 9070TF transformers are now standard in Series K combination starters.

Internal Auxiliary Switch—Circuit breakers can be supplied with a factory installed auxiliary switch for remote indication of an open and/or tripped or a closed breaker. One (specify **Form Y741**) or two (specify **Form Y751**) auxiliary switches can be supplied. The switches are supplied with normally open and normally closed circuits with a common connection. Contacts must be used on the same polarity and are rated 15 A at 240 Vac. The auxiliary switches are located internally and are furnished with 19-20 inch long leads.

Alarm Switch—The alarm switch only operates when the breaker is tripped. It is used to actuate bell alarms and warning lights. The alarm switch is factory installed only (specify **Form Y742**) and consists of a single pole single throw switch which is normally open except when the breaker is tripped. The contacts are rated 4 A at 240 Vac. This switch is located in the breaker and is supplied with 19-20 inch long leads.

Transformer Selection—Space and drilling are provided in all disconnect switch and circuit breaker combination starters in NEMA 1, 4 & 4X stainless and polyester, 12 and 7 & 9 bolted enclosures for the field addition (or factory installation) of a Class 9070 control circuit transformer and Class 9999 Type SFR4 fuse holder. This kit can be either panel mounted or side mounted on the Type S starter. For standard control transformer selection in combination starters, see . Consult the field office for transformer additions to NEMA 7 and 9 Spin Top™ enclosures. For secondary fuse holder, order 9080PF1.

Fuse Block Mounting Brackets—The standard capacity transformer, Class 9070 Type T100, for the Size 0 and 1 starters mounts to the right of the magnetic starter.

Standards—Most combination starters and forms are UL Listed in file E152395, Category NKJH, and CSA File CR 584.

[76] Class 8538 type numbers ending in suffix **S8**.
[77] Complete the contactor or starter Class and Type with the voltage code. See Full Voltage Contactors and Starters Forms, page 16-118.
[78] Requires oversized enclosure. (Size 2 reversing enclosure.)
[79] Available in standard enclosure with Mag-Gard™ circuit breaker and non-fusible disconnect switch. Requires oversized enclosure with thermal-magnetic circuit breakers and fusible disconnect switches. (Size 2 reversing enclosure.)

© 2019 Schneider Electric
All Rights Reserved
11/20/2019

Courtesy of Steven Engineering, Inc - (800) 258-9200 - sales@steveneng.com - www.stevenengineering.com

Approximate Dimensions

Table 16.159: See Figure: NEMA 1 Enclosure, Sizes 0–2

NEMA Size	Class	Type	Dimensions, in. *[80]*																Top & Bottom		Sides	Wt. (lb)
			A	B	C	D	E	F	G	H	I	J	K	L	M	N	O	P	W	X	Y	
0–1	8538	SBG , SCG	9.5	22.5	8.34	6.38	20.5	14.66	1.81	1.69	3	2.31	1.06	3.25	2.19	1.25	0.88	—	0.5–0.75	0.5–0.75	0.5	38
	8539	SBG, SCG	9.5	22.5	9.84	6.38	20.5	14.66	1.81	1.69	3	2.31	1.06	3.25	2.19	1.25	0.88	—	0.5–0.75	0.5–0.75	0.5	38
2	8538, 8539	SDG	10.5	26	9.59	7.38	24	16.91	2.13	2	4	2.31	1.06	3.25	2.19	1.25	0.88	—	1–1.25	0.5–0.75	0.5	54

Table 16.160: See Figure: NEMA 1 Enclosure, Sizes 3–6

NEMA Size	Class	Type	Dimensions, in. *[80]*																Top & Bottom		Sides	Wt. (lb)
			A	B	C	D	E	F	G	H	I	J	K	L	M	N	O	P	W	X	Y	
3 *[81]*	8538, 8539	SEG	15.25	42	10.59	9.25	3	22.72	41	0.5	—	2.83	3.53	5	2.69	5.38	1.28	0.91	1–1.25 2–2.5	0.5–0.75	0.5	102
4	8538	SFG	16	52.5	10.53	10	3	23.66	51.5	0.5	—	2.83	3.53	5	2.69	5.38	1.28	0.91	2.5	0.5–0.75	0.5	163
	8539	SFG	16	52.5	10.53	10	3	23.66	51.5	0.5	—	2.83	3.53	5	2.69	5.38	1.28	0.91	2.5	0.5–0.75	0.5	163
5	8538	SGG	20	78	15.5	12	4	29.41	77	0.5	—	3.52	4.61	9.25	3.19	—	—	—	0.5–0.75 *[82]*	3	—	450
	8539	SGG	20	66	13.72	12	4	29.41	65	0.5	—	3.52	4.61	5	3.19	—	—	—	0.5–0.75	3	—	420
6 *[83]*	8538, 8539	SHG	36	90	21.03	—	—	41.38	—	—	—	—	—	5	—	—	—	—	—	—	—	—

Table 16.161: See Figure: NEMA 12/3R Enclosure

NEMA Size	Class	Type	Dimensions, in. *[84]*										Wt. (lb)
			A	B	C	D	E	F	G	H	I	J	
0–1	8538	SBA SCA	9.5	8.34	24	3.25	2.5	4.5	23.5	0.59	4.44	14.31	40
	8539	SBA SCA	9.5	9.84	24	3.25	2.5	4.5	23.5	0.59	4.44	14.31	40
2	8538, 8539	SDA	10.5	9.59	27.75	3.25	2.5	5.5	27	0.38	4.13	16.56	55
3 *[81]*	8538, 8539	SEA	15.25	10.59	42	5	3	9.25	41	0.5	5.06	22.31	111
4	8538	SFA	16	10.53	52.5	5	3	10	51.5	0.5	4.19	22.97	170
	8539	SFA	16	10.53	52.5	5	3	10	51.5	0.5	5.19	22.97	170
5	8538	SGA	20	13.72	78	9.25	4	12	77	0.5	7.78	29.41	—
	8539	SGA	20	13.72	66	5	4	12	65	0.5	7.78	27.41	440
6 *[83]*	8538, 8539	SHA	36	17	90	5	—	—	—	—	—	47.38	—

Table 16.162: See Figure: NEMA 4 and 4X Stainless Steel Enclosure

NEMA Size	Class	Type	Dimensions, in. *[80]*												Bottom	Top & Bot.	Wt. (lb)
			A	B	C	D	E	F	G	H	I	J	K	L	W	X	
0–1	8538	SBW SCW	9.5	8.34	24.06	3.25	2.5	4.5	23.5	0.59	3.03	1.31	2.31	14.28	0.75 Hub	1 Hub	40
	8539	SBW SCW	9.5	9.84	24.06	3.25	2.5	4.5	23.5	0.59	3.03	1.31	2.31	14.28	0.75 Hub	1 Hub	40
2	8538, 8539	SDW	10.5	9.59	27.75	3.25	2.5	5.5	27	0.59	3	2	2.63	16.53	0.75 Hub	1.5 Hub	55
3 *[81]*	8538, 8539	SEW	15.25	10.59	42	5	3.19	10.25	40.5	0.59	3	2.56	3.19	22.19	0.75 Hub	2.5 Hub	111
4	8538	SFW	16	10.53	52.5	5	3.56	11	51	0.59	3	2.56	3.19	22.47	0.75 Hub	2.5 Hub	158
	8539	SFW	16	10.53	52.5	3.25	2.5	11	51	0.59	3	2.56	3.19	22.47	0.75 Hub	2.5 Hub	120
5	8538	SGW	20	13.72	78	9.25	4	12	77	0.56	4.5	3	3.5	29.41	0.75 Hub	3.5 Hub	—
	8539	SGW	20	13.72	66	5	4	12	65	0.56	4.5	3	3.5	29.41	0.75 Hub	3.5 Hub	440
6 *[83]*	8538, 8539	SHW	36	17	90	—	—	—	—	—	—	—	—	47.88	—	—	—

NOTE: These dimensions are for reference only. If you need precise measurements, contact the Customer Care Center at 1-888-778-2733.

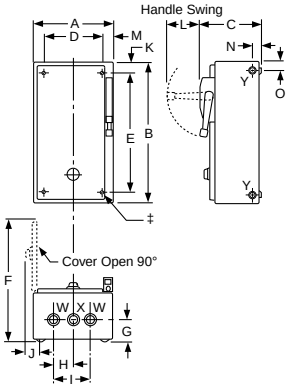

Figure 16.3: NEMA 1 Enclosure, Size 0–2

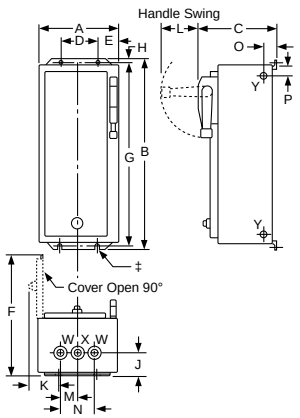

Figure 16.4: NEMA 1 Enclosure, Size 3–6

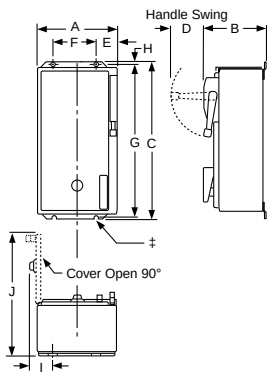

Figure 16.5: NEMA 12 Enclosure

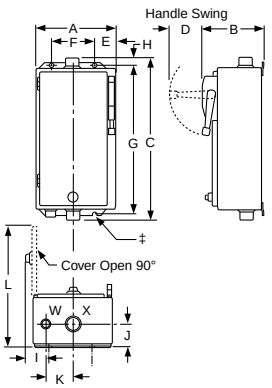

Figure 16.6: NEMA 4 and 4X Stainless Steel Enclosure

‡ = 4 mounting holes: 0.31 in. (8 mm) dia. for Sizes 0, 1, and 2; 0.44 in. (11 mm) dia. for Sizes 3 and 4; 0.56 in. (14 mm) dia., located on external flanges, for Size 5.

NOTE: Illustrations may not represent the actual enclosure. They are intended for dimensional information only.

[80] Dimensions also for **Form FF4T** (standard control transformer). **Form FF4T11** (100 VA extra capacity) and **Form FF4T12** (200 VA extra capacity) could require the use of an oversized enclosure. Refer to .
[81] Class 8538 Size 3 devices with 200 A fuse clips use dimensions for Class 8538 Size 4.
[82] Left side only.
[83] Size 6 enclosures are floor mounting.
[84] Dimensions include space for control circuit transformers.

© 2019 Schneider Electric
All Rights Reserved
11/20/2019

Courtesy of Steven Engineering, Inc - (800) 258-9200 - sales@steveneng.com - www.stevenengineering.com

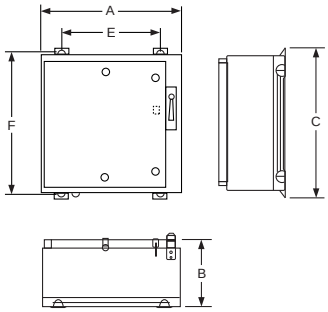

Figure 16.7: NEMA 4X Polyester Enclosure

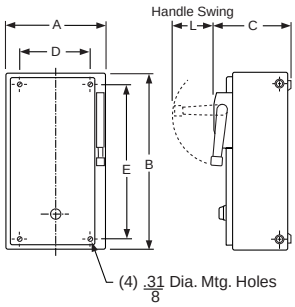

Figure 16.8: Class 8538 and 8539 in Oversize Enclosures—NEMA 1, 4 & 4X Stainless, and 12/3R

Enclosures

NOTE: These dimensions are for reference only. If you need precise measurements, contact the Customer Care Center at 1-888-778-2733.

Table 16.163: See Figure: NEMA 4X Polyester Enclosure, page 16-59 *[85]*

NEMA Size	Class	Dimensions, in.					
		Type	A	B	C	E	F
0, 1	8538	SBW	13.72	11.4	26.94	6.25	25.75
0, 1	8539	SCW SDW					
0, 1, & 2	8738, 8739	SBW SCW SDW	25.25	11.4	27.00	17.88	25.75
2	8538, 8539						
3–4	8538, 8738 8539, 8739	SEW SFW *[86]*	26.31	11.4	33.50	18.50	32.25

Table 16.164: See Figure: Class 8538 and 8539 in Oversize Enclosures—NEMA 1, 4 & 4X Stainless, and 12/3R, page 16-59

NEMA Size	NEMA Type Encl.	Dimensions, in.					
		Wide A	High B	Deep C	Handle L	Mounting	
						D	E
0–2	1	15	28.33	9.59	3.25	11.625	26.25
	4	15	30.03	9.59	3.25	10	29.75
	12	15	31	10.97	3.25	9	30.25

Information on Hubs

Hubs are supplied with each NEMA Type 4X combination starter as shown in Table 16.165.

Note that hubs are only installed in stainless steel enclosures; they are not installed in polyester enclosures.

Table 16.165: Hub Sizes

NEMA Size	Quantity	Hub Size (in.)
0 and 1	1 2	0.75 1.00
2	1 2	0.75 1.50
3 and 4	1 2	0.75 2.50

NOTE: Illustrations may not represent the actual enclosure—they are intended for dimensional information only.

Table 16.166: Conduit Sizes LOC A, B, C and D

NEMA Size	Standard
0–1	1.25
2	1.5
3–4	2.5
5	4

[85] Dimensions also for **Form F4T** (standard control transformer) and **Form F4T10** (50 VA additional capacity). Other control transformers may require the use of oversized enclosures. Refer to .

[86] 8539 Size 4 only.

© 2019 Schneider Electric
All Rights Reserved
11/20/2019

Courtesy of Steven Engineering, Inc - (800) 258-9200 - sales@steveneng.com - www.stevenengineering.com

NEMA 00, 0, and 1
Reversing Contactor

General Information

Class 8702 Type S reversing magnetic contactors are used for starting, stopping, and reversing AC motors where overload protection is separately provided. Class 8702 reversing contactors consist of two Class 8502 contactors mechanically and electrically interlocked. Open type devices, Sizes 0–5, are available in either horizontal or vertical arrangements. Sizes 00, 6, and 7 are available as horizontal only. Enclosed devices, Size 00–7, use horizontally arranged components. Type S reversing contactors are designed for operation at up to 600 Vac, 50/60 Hz.

NOTE: In Table 16.167, replace the three bullets (●●●) in the catalog number with the coil voltage code. Refer to the standard coil voltage codes listed in Table 16.168.

For information on field modification of NEMA 12 enclosures, see page 16-112 .

Table 16.167: 600 Vac Maximum—50–60 Hz

NEMA Size	Continuous Current Ratings	Motor Voltage	Max. Hp	Open Type		NEMA 1 General Purpose Enclosure	NEMA 4 & 4X Watertight, Dusttight Brushed Stainless Steel Enclosure (Sizes 0–5)[1]	NEMA 7 & 9 [2] Hazardous Locations, Div. 1 & 2 Class I, Groups C & D Class II, Groups E, F & G		NEMA 12/3R[3] Dusttight & Driptight Industrial Use Enclosure
				Vertical Type	Horizontal Type	Type	Type	Bolted Aluminum Type	SPIN TOP™ Type	Type
00	9	200 230 460 575	1.5 1.5 2 2	—	SAO4●●●	SAG4●●●	Use Size 0	Use Size 0	Use Size 0	Use Size 0
0	18	200 230 460 575	3 3 5 5	SBO12●●●	SBO4●●●	SBG4●●●	SBW14●●●	SBT49●●●	SBR9●●●	SBA4●●●
1	27	200 230 460 575	7.5 7.5 10 10	SCO7●●●	SCO8●●●	SCG8●●●	SCW14●●●	SCT49●●●	SCR9●●●	SCA4●●●
2	45	200 230 460 575	10 15 25 25	SDO1●●●	SDO2●●●	SDG2●●●	SDW11●●●	SDT43●●●	SDR3●●●	SDA1●●●
3	90	200 230 460 575	25 30 50 50	SEO1●●●	SEO2●●●	SEG2●●●	SEW11●●●	—	—	SEA1●●●
4	135	200 230 460 575	40 50 100 100	SFO1●●●	SFO3●●●	SFG3●●●	SFW11●●●	—	—	SFA1●●●
5	270	200 230 460 575	75 100 200 200	SGO1●●●	SGO3●●●	SGG3●●●	SGW11●●●	—	—	SGA1●●●
6	540	200 230 460 575	150 200 400 400	—	SHO1●●●	SHG1●●●	SHW1●●●	—	—	SHA1●●●
7	810	200 230 460 575	— 300 600 600	—	SJO1●●●	SJG1●●●	SJW1●●●	—	—	SJA1●●●

Table 16.168: Coil Voltage Codes

Voltage		Code
60 Hz	50 Hz	
24[4]	—	V01
120 [5]	110	V02
208	—	V08
240	220	V03
277	—	V04
480	440	V06
600	550	V07
Specify	Specify	V99

NOTE: For voltage codes used with control transformers, see page page 16-118. Form S (separate control) is used when a separate source of power is available for the control (coil) voltage. Form S is available at no charge.

Dimensions: page 16-64
Factory Modifications (Forms) page 16-117
Separate Enclosures (Class 9991): page 16-110
Replacement Parts (Class 9998): page 16-122
Type S Accessories (Class 9999): page 16-125

For How to Order Information, see page 16-28.

[1] NEMA 4 and 4X stainless steel enclosures (sizes 0–5) have a brushed finish. Sizes 6 and 7 are painted sheet steel and are rated NEMA 4 only.
[2] NEMA 7 and 9 bolted are not UL listed.
[3] NEMA 12 enclosures can be field modified for outdoor non-corrosive and non–service entrance rated applications.
[4] 24 V coils are not available on Sizes 4-7. On Sizes 00-3, where 24 V coils are available, **Form S** (separate control) can be specified (i.e., order as 8702SAO4V01S).
[5] This voltage code can include **Form S** for separate control (provided at no charge) (for example, order as 8702SAO4V02S).

© 2019 Schneider Electric
All Rights Reserved
11/20/2019

Courtesy of Steven Engineering, Inc - (800) 258-9200 - sales@steveneng.com - www.stevenengineering.com

Single-Phase and 4–Pole Polyphase

NOTE: In Table 16.169, replace the three bullets (●●●) in the catalog number with the coil voltage code. Refer to the standard coil voltage codes listed in Table 16.168.

For information on field modification of NEMA 12 enclosures, see page 16-112 .

Table 16.169: 600 Vac Maximum—50–60 Hz

NEMA Size	Continuous Current Ratings	Motor Voltage	Max. Hp	Type of Motor	Open Type		NEMA 1 General Purpose Enclosure	NEMA 4 & 4X Watertight, Dusttight Brushed Stainless Steel Enclosure	NEMA 7 & 9 [6] Hazardous Locations, Div. 1 & 2 Class I, Groups C & D Class II, Groups E, F & G		NEMA 12/3R[7] Dusttight & Driptight Industrial Use Enclosure
					Vertical Type	Horizontal Type	Type	Type	Bolted Type	Spin Top™ Type	Type
2-Pole Single Phase											
00	9	115 230	1/3 1	Single Phase 3-Wire	—	SAO1●●●	SAG1●●●	Use Size 0	Use Size 0	Use Size 0	Use Size 0
0	18	115 230	1 2		SBO9●●●	SBO1●●●	SBG1●●●	SBW11●●●	SBT46●●●	SBR6●●●	SBA1●●●
1	27	115 230	2 3		SCO1●●●	SCO2●●●	SCG2●●●	SCW11●●●	SCT46●●●	SCR6●●●	SCA1●●●
3-Pole Single Phase											
00	9	115 230	1/3 1	4-Wire Rep.-Ind.	—	SAO2●●●	SAG2●●●	Use Size 0	Use Size 0	Use Size 0	Use Size 0
		115 230	1/3 1	4-Wire Split Ph.	—	SAO3●●●	SAG3●●●	Use Size 0	Use Size 0	Use Size 0	Use Size 0
0	18	115 230	1 2	4-Wire Rep.-Ind.	SBO10●●●	SBO2●●●	SBG2●●●	SBW12●●●	SBT47●●●	SBR7●●●	SBA2●●●
		115 230	1 2	4-Wire Split Ph.	SBO11●●●	SBO3●●●	SBG3●●●	SBW13●●●	SBT48●●●	SBR8●●●	SBA3●●●
1	27	115 230	2 3	4-Wire Rep.Ind.	SCO3●●●	SCO4●●●	SCG4●●●	SCW12●●●	SCT47●●●	SCR7●●●	SCA2●●●
		115 230	2 3	4-Wire Split Ph.	SCO5●●●	SCO6●●●	SCG6●●●	SCW13●●●	SCT48●●●	SCR8●●●	SCA3●●●
4-Pole Polyphase											
0	18	200 230 460 575	3 3 5 5	2 Phase 4-Wire	SBO13●●●	SBO5●●●	SBG5●●●	SBW15●●●	Consult the Customer Care Center at 1-888-778-2733	SBR10●●●	SBA5●●●
1	27	200 230 460 575	7.5 7.5 10 10		SCO9●●●	SCO10●●●	SCG10●●●	SCW15●●●		SCR10●●●	SCA5●●●
2	45	200 230 460 575	10 15 25 25		—	SDO4●●●	SDG4●●●	SDW12●●●		SDR4●●●	SDA2●●●
3	90	200 230 460 575	25 30 50 50		—	SEO4●●●	SEG4●●●	SEW12●●●	—	—	SEA2●●●
4	135	200 230 460 575	40 50 100 100		—	SFO4●●●	SFG4●●●	SFW12●●●	—	—	SFA2●●●

Dimensions: page 16-64
Factory Modifications (Forms): page 16-117
Separate Enclosures (Class 9991): page 16-110
Replacement Parts (Class 9998): page 16-122
Type S Accessories (Class 9999): page 16-125
For How to Order Information, see page 16-28.

Auxiliary Units

Table 16.170 shows the maximum number of auxiliary units **(in addition to the holding circuit and interlocking contacts)** that can be added to either the forward or reverse contactor or starter.

Table 16.170: Auxiliary Units—Class 8702, 8736, and 8810

NEMA Size (Type)	No. of Poles—Basic Contactor	Maximum number of auxiliary units on each contactor, forward or reverse (in addition to internal holding circuit and interlocking contacts)
00 (SA)	2–3	2 single circuit auxiliary contacts (N.O. or N.C.)
0–2 (SB–SD)	2–3	4 single circuit auxiliary contacts (N.O. or N.C.) [8]
	4	2 single circuit auxiliary contacts (N.O. or N.C.)
3–7 (SE–SJ)	Any	2 single circuit auxiliary contacts (N.O. or N.C.)

[6] NEMA 7 and 9 bolted are not UL listed.
[7] NEMA 12 enclosures can be field modified for outdoor non-corrosive and non–service entrance rated applications.
[8] When adding 4 external auxiliary contacts to one Size 0 or 1 contactor, remove one of the return springs.

© 2019 Schneider Electric
All Rights Reserved
11/20/2019

Courtesy of Steven Engineering, Inc - (800) 258-9200 - sales@steveneng.com - www.stevenengineering.com

Introduction and Overload Relays

NEMA Sizes 00, 0, 1 Reversing Starter

Horizontal Type

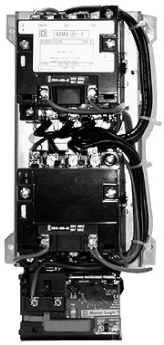

Vertical Type

Class 8736 Type S reversing magnetic starters are used for full-voltage starting, stopping, and reversing AC squirrel cage motors. Class 8736 starters consist of one Class 8502 contactor and one Class 8536 starter mechanically and electrically interlocked. Open type devices, Sizes 0–5, are available in either horizontal or vertical arrangements. Sizes 00, 6, and 7 are available as horizontal only. Enclosed devices use horizontally arranged components. Type S starters are designed for operation at up to 600 Vac, 50/60 Hz.
For How to Order Information, see page 16-28

Motor Logic™ Solid-State Overload Relay (SSOLR) Protection
These ambient insensitive overload relays are available on three phase sizes 00 through 6 and standard on size 7. They provide phase loss, phase unbalance protection. To order, add Form **H30** (for selectable trip class 10 or 20 protection). For more information about Motor Logic solid-state overload relays (SSOLRs), see pages page 16-101 and page 16-119. (Catalog no. example: 8736SCO8V06H30)

New! **Adapted Bimetallic or Solid-State Overload Relay (NEMA Sizes 00–1)**
The Adapted Bimetallic or Solid-State starter includes a specially designed adapter that attaches with bus bars to the Type S NEMA contactor. This adapter allows direct mounting of the IEC Style bimetallic (LRD or LR3D) or solid-state (LR9D) overload relay (OLR). To order this starter configuration, add **Form E** (adapter only) to the standard catalog number. The LRD, LR3D, or LR9D OLR must be purchased separately, based on the FLA of the motor, and installed in the field to properly operate the starter. For the Adapted Bimetallic device only, if the FLA is known at the time of purchase, you can order the starter with the OLR installed. For more information and a list of options, see Adapted Bimetallic Overload Relay Forms, page 16-119. (Catalog no. example: 8736SCO8V06E—without OLR)

New! **TeSys T Motor Management System (NEMA Sizes 1–6)**
TeSys T is a flexible system that integrates seamlessly into your automation system through five major communication protocols. TeSys T can predict what will happen in the process, as it accurately monitors current, voltage, and power over a wide range. For additional information about the TeSys T Motor Management System, see page 16-103 (for example, 8736SCO8V06**H616**).

Melting Alloy Overload Relays
Melting alloy type thermal overload blocks are installed as part of the starter, and thermal elements must be selected and installed separately in order to operate the starter. For a three-phase motor, three thermal units must be ordered using the tables beginning under page 16-133. The catalog number includes no Form number (for example, 8736SCO8V06).

Type S Reversing Starters, 3–Pole Polyphase

NOTE: In Table 16.171, replace the three bullets (●●●) in the catalog number with the coil voltage code. Refer to the standard coil voltage codes shown in . For information on field modification of NEMA 12 enclosures, see page 16-112. For Form H30• (special lower-FLA factory-assembled starter combinations with Motor Logic SSOLR protection), see Solid-State Overload Relay Forms, page 16-119.

Table 16.171: 3–Pole Polyphase, 600 Vac Maximum, 50–60 Hz, with Motor Logic SSOLR *[9]*

NEMA Size	Continuous Current Ratings	Motor Voltage	Max. Hp	Open Style		NEMA 1 General Purpose Enclosure	NEMA 4 & 4X Watertight, Dusttight Brushed Stainless Steel Enclosure (Sizes 0–5) *[10]*	NEMA 7 & 9 *[11]* Hazardous Locations Class I, Groups C & D Class II, Groups E, F & G		NEMA 12/3R *[12]* Dusttight, Driptight Industrial Use Enclosure
				Vertical	Horizontal					
				Type	Type	Type	Type	Bolted, Type	SPIN-TOP™ , Type	Type
00	9	200 230 460 575	1.5 1.5 2 2	—	SAO16●●●H30 *[13]*	SAG16●●●H30 *[13]*	Use Size 0	Use Size 0	Use Size 0	Use Size 0
0	18	200 230 460 575	3 3 5 5	SBO10●●●H30 *[13]*	SBO4●●●H30 *[13]*	SBG4●●●H30 *[13]*	SBW14●●●H30 *[13]*	SBT49●●●H30 *[13]*	SBR9●●●H30 *[13]*	SBA4●●●H30 *[13]*
1	27	200 230 460 575	7.5 7.5 10 10	SCO7●●●H30 *[13]*	SCO8●●●H30 *[13]*	SCG8●●●H30 *[13]*	SCW14●●●H30 *[13]*	SCT49●●●H30 *[13]*	SCR9●●●H30 *[13]*	SCA4●●●H30 *[13]*
2	45	200 230 460 575	10 15 25 25	SDO1●●●H30 *[13]*	SDO2●●●H30 *[13]*	SDG2●●●H30 *[13]*	SDW11●●●H30 *[13]*	SDT43●●●H30 *[13]*	SDR3●●●H30 *[13]*	SDA1●●●H30 *[13]*
3	90	200 230 460 575	25 30 50 50	SEO1●●●H30	SEO2●●●H30	SEG2●●●H30	SEW11●●●H30	—	—	SEA1●●●H30
4	135	200 230 460 575	40 50 100 100	SFO1●●●H30	SFO3●●●H30	SFG3●●●H30	SFW11●●●H30	—	—	SFA1●●●H30
5	270	200 230 460 575	75 100 200 200	SGO1●●●H30	SGO3●●●H30	SGG3●●●H30	SGW11●●●H30	—	—	SGA1●●●H30

[9] To order melting alloy overload relay, remove form "H30" from part number.
[10] NEMA 4 and 4X stainless steel enclosures (sizes 0–5) have a brushed finish. Sizes 6 and 7 are painted sheet steel and are rated NEMA 4 only.
[11] NEMA 7 and 9 bolted are not UL listed.
[12] NEMA 12 enclosures can be field modified for outdoor non-corrosive and non–service entrance rated applications.
[13] **Form H30**, with the possibility of a fourth character to select a lower FLA range (for example, **H308**). See "Solid-State Overload Relay Forms" on page 16-119

© 2019 Schneider Electric
All Rights Reserved
11/20/2019

Courtesy of Steven Engineering, Inc - (800) 258-9200 - sales@steveneng.com - www.stevenengineering.com

Table 16.171 3–Pole Polyphase, 600 Vac Maximum, 50–60 Hz, with Motor Logic SSOLR *[16.171]* **(cont'd.)**

NEMA Size	Continuous Current Ratings	Motor Voltage	Max. Hp	Open Style		NEMA 1 General Purpose Enclosure	NEMA 4 & 4X Watertight, Dusttight Brushed Stainless Steel Enclosure (Sizes 0–5) *[14]*	NEMA 7 & 9 *[15]* Hazardous Locations Class I, Groups C & D Class II, Groups E, F & G		NEMA 12/3R *[16]* Dusttight, Driptight Industrial Use Enclosure
				Vertical	Horizontal					
				Type	Type	Type	Type	Bolted, Type	SPIN-TOP™ , Type	Type
6	540	200 230 460 575	150 200 400 400	—	SHO1•••H30	SHG1•••H30	SHW1•••H30	—	—	SHA1•••H30
7	810	200 230 460 575	– 300 600 600	—	SJO1•••H30	SJG1•••H30	SJW1•••H30	—	—	SJA1•••H30

Type S, 2- and 3-Pole Single Phase, 4-Pole Polyphase

Devices require melting alloy thermal units, page 16-132.

NOTE: In Table 16.172, replace the three bullets (•••) in the catalog number with the coil voltage code. Refer to the standard coil voltage codes shown in .

For information on field modification of NEMA 12 enclosures, see page 16-112 .

Table 16.172: 2- and 3-Pole Single Phase, 4-Pole Polyphase, 600 Vac Maximum—50–60 Hz

NEMA Size	Continuous Current Ratings	Motor Voltage	Max. Hp	Type of Motor	Open Type		NEMA 1 General Purpose Enclosure	NEMA 4 & 4X Watertight, Dusttight Brushed Stainless Steel Enclosure	NEMA 7 & 9 *[15]* Hazardous Locations Class I, Groups C & D Class II, Groups E, F & G		NEMA 12/3R*[16]* Dusttight, Driptight Industrial Use Enclosure
					Vertical Type	Horizontal Type	Type	Type	Bolted Type	Spin Top™ Type	Type
2-Pole Single Phase—1 Thermal Unit Required											
00	9	115 230	1/3 1	Single Phase 3-Wire	—	SAO13•••	SAG13•••	Use Size 0	Use Size 0	Use Size 0	Use Size 0
0	18	115 230	1 2		SBO7•••	SBO1•••	SBG1•••	SBW11•••	SBT46•••	SBR6•••	SBA1•••
1	27	115 230	2 3		SCO1•••	SCO2•••	SCG2•••	SCW11•••	SCT46•••	SCR6•••	SCA1•••
3-Pole Single Phase—1 Thermal Unit Required											
00	9	115 230	1/3 1	4-Wire Rep.-Ind.	—	SAO14•••	SAG14•••	Use Size 0	Use Size 0	Use Size 0	Use Size 0
		115 230	1/3 1	4-Wire Split Ph.	—	SAO15•••	SAG15•••	Use Size 0	Use Size 0	Use Size 0	Use Size 0
0	18	115 230	1 2	4-Wire Rep.-Ind.	SBO8•••	SBO2•••	SBG2•••	SBW12•••	SBT47•••	SBR7•••	SBA2•••
		115 230	1 2	4-Wire Split Ph.	SBO9•••	SBO3•••	SBG3•••	SBW13•••	SBT48•••	SBR8•••	SBA3•••
1	27	115 230	2 3	4-Wire Rep.-Ind.	SCO3•••	SCO4•••	SCG4•••	SCW12•••	SCT47•••	SCR7•••	SCA2•••
		115 230	2 3	4-Wire Split Ph.	SCO5•••	SCO6•••	SCG6•••	SCW13•••	SCT48•••	SCR8•••	SCA3•••
4-Pole Polyphase—2 Thermal Units Required											
0	18	200 230 460 575	3 3 5 5	2 Phase 4-Wire	SBO11•••	SBO5•••	SBG5•••	SBW15•••	Consult the Customer Care Center at 1-888-778-2733	SBR10•••	SBA5•••
1	27	200 230 460 575	7.5 7.5 10 10		SCO9•••	SCO10•••	SCG10•••	SCW15•••		SCR10•••	SCA5•••
2	45	200 230 460 575	10 15 25 25		—	SDO4•••	SDG4•••	SDW12•••		SDR4•••	SDA2•••
3	90	200 230 460 575	25 30 50 50		—	SEO4•••	SEG4•••	SEW12•••	—	—	SEA2•••
4	135	200 230 460 575	40 50 100 100		—	SFO4•••	SFG4•••	SFW12•••	—	—	SFA2•••

Table 16.173: Coil Voltage Codes

Voltage		Code
60 Hz	50 Hz	
24*[17]*	—	V01
120*[18]*	110	V02
208	—	V08
240	220	V03
277	—	V04
480	440	V06
600	550	V07
Specify	Specify	V99

NOTE: For voltage codes used with control transformers, see page page 16-118. Form S (separate control) is used when a separate source of power is available for the control (coil) voltage. Form S is supplied at no charge.

Dimensions: page 16-64
Factory Modifications (Forms) page 16-117
Separate Enclosures (Class 9991): page 16-110
Replacement Parts (Class 9998): page 16-122
Type S Accessories (Class 9999): page 16-125

For How to Order Information, see page 16-28.

[14] NEMA 4 and 4X stainless steel enclosures (sizes 0–5) have a brushed finish. Sizes 6 and 7 are painted sheet steel and are rated NEMA 4 only.
[15] NEMA 7 and 9 bolted are not UL listed.
[16] NEMA 12 enclosures can be field modified for outdoor non-corrosive and non–service entrance rated applications.
[17] 24 V coils are not available on Sizes 4–7. On Sizes 00–3, where 24 V coils are available, **Form S** (separate control) must be specified (for example, order as 8736SCO1V01S).
[18] This voltage code can include **Form S** for separate control (provided at no charge) (for example, order as 8736SBO7V02S).

© 2019 Schneider Electric
All Rights Reserved
11/20/2019

Courtesy of Steven Engineering, Inc - (800) 258-9200 - sales@steveneng.com - www.stevenengineering.com

Open and NEMA 1 Enclosures

NOTE: These dimensions are for reference only. If you need precise measurements, contact the Customer Care Center at 1-888-778-2733.

Table 16.174: Open Style, 2 or 3-Pole Only (Mounting: H = Horizontal; V = Vertical)
See Figures: Class 8702 Contactor, Open Type **and** Class 8736 Starter, Open Type

NEMA Size	Type	Mtg.	Fig. No.	Dimensions, in.													Wt. (lb)
				A	B	C	D	E	F	G	H	I	J	K	L	M	
Class 8702 Contactors																	
00	SAO	H	1	7.13	5	5.31	—	—	3.41	0.47	4.34	0.19	5.5	0.91	—	—	12
0, 1	SBO, SCO	H V	1 1[19]	7.13 5.47	5 9.22	5.31 5.31	— 5.5	— 0.22	3.41 —	0.47 0.61	4.34 8	0.19 0.61	5.5 5.03	0.91 0.22	—	—	12 12
2	SDO	H V	1 1[19]	9 6.75	6.88 11.38	6.03 6.03	— 6.25	— 0.25	4.5 —	0.38 0.5	5.63 10.38	0.25 0.5	6 0.25	1.5 0.25	—	—	16 16
3	SEO	H V	1 1[19]	12.72 7.20	7.97 19	7 7	11.75 6.25	0.48 0.48	—	0.48 1.02	7 17	0.48 0.98	11.75 6.25	0.48 0.48	—	—	35 35
4	SFO	H V	1 1[19]	14.25 7.97	11.69 23.91	7 7	13.25 7	0.5 0.48	—	0.5 1.81	8 20.25	1.84 1.19	13.25 7	0.5 0.48	—	—	45 45
5	SGO	H V	1 1[19]	19.31 10.75	16.19 34.41	9.38 9.38	18 9.5	0.66 0.63	—	1.03 1.25	14 32	1.16 1.16	18 9.5	0.66 0.63	—	—	98 98
6	SHO	H	1	22.38	28.05	9.52	18	0.63	—	3.83	21.19	3.03	18	0.77	—	—	195
7	SJO	H	1	24.25	37.25	13.81	19.75	1.52	—	—	30	—	—	—	—	—	310
Class 8736 Starters																	
00	SAO		2	7.13	6.91	5.31	—	—	3.41	0.47	4.34	6.22	4.53	5.06	0.66	—	13
0, 1	SBO, SCO	H V	2 2[19]	7.13 5.47	6.91 11.52	5.31 5.31	— 5.03	— 0.22	3.41 —	0.47 0.61	4.34 8	6.22 10.70	4.53 2.52	5.06 5.06	0.66 0.22	— 5.03	13 13
2	SDO	H V	2 2[19]	9 6.75	8.5 13.48	6.03 6.03	— 6.25	— 0.25	4.5 —	0.38 0.78	5.63 10.38	7.5 12.97	5 3.13	5.16 5.16	1.5 0.25	— 6	18 18
3	SEO	H V	2 2[19]	12.72 7.31	11.72 22.25	7 7	11.75 6.25	0.48 0.48	—	0.48 1.02	10.75 20.75	10.75 —	11.75 6.25	6.25 6.25	0.48 0.48	11.75 6.25	38 38
4	SFO	H V	2 2[19]	14.25 7.97	14.59 26.81	7 7	13.25 7	0.5 0.48	—	1.84 1.84	12.25 24.5	12.25 —	13.25 4.05	6.25 6.25	0.5 0.48	13.25 7	48 48
5	SGO	H V	2 2[19]	19.31 10.75	20.91 39.16	9.38 9.38	18 9.5	0.66 0.66	—	1.28 1.28	19 37.25	19 37.25	18 9.5	6.63 6.63	0.63 0.63	18 9.5	115 115
6	SHO	H	2	22.38	28.05	9.52	18	0.69	—	3.83	21.19	3.03	18	0.77	—	—	200
7	SJO	H	1	24.25	37.25	13.81	19.75	1.52	—	—	30	—	—	—	—	—	315

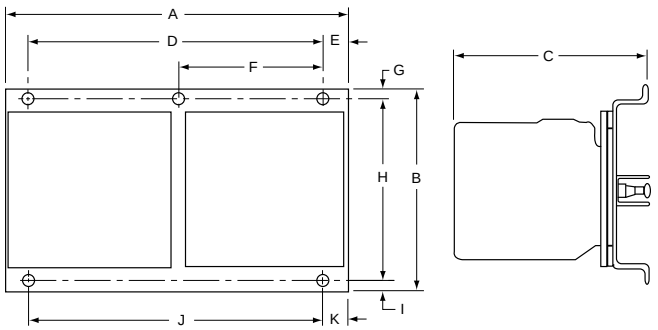

Figure 16.9: Class 8702 Contactor, Open Type

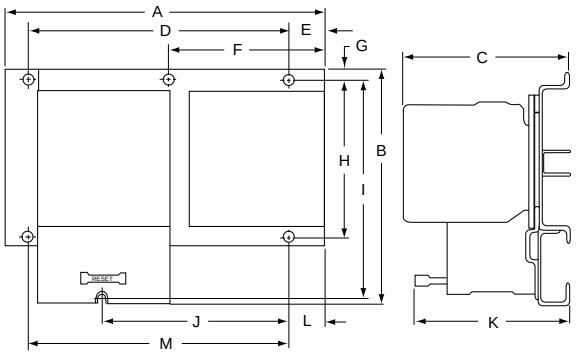

Figure 16.10: Class 8736 Starter, Open Type

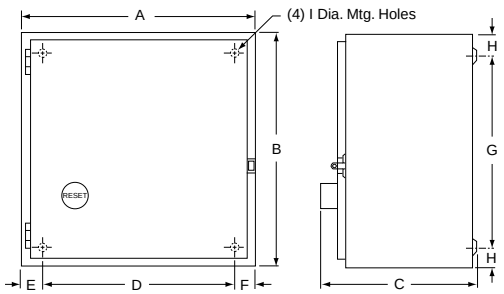

Figure 16.11: NEMA 1

Table 16.175: NEMA 1, Class 8702 and 8736 (see Figure: NEMA 1)

NEMA Size	Dimensions—in.										Weight (lb)	
	A	B	C		D	E	F	G	H	I	8702	8736
			8702	8736								
00, 0 [20] 1 [21]	11.88	11.88	7.41	7.53	9.75	1.06	1.06	9.75	1.06	0.31	16	17
2 [21]	14.88	14.13	7.56	7.66	12.75	1.06	1.06	12	1.06	0.31	24	25
3 [20] 4 [20]	18.16	29.16	9.25	9.25	15.5	1.33	1.33	26.5	1.33	0.44	95	98
5	35.22	46.22	12.81	12.94	31	2.11	2.11	42	2.11	0.56	298	315
6	36.22	62.22	19.47		Floor Mounting.						400	405
7	34.5	93	23.5								—	—

[19] The vertical design differs from the horizontal design figure shown for the corresponding NEMA size, but the dimensions listed apply.
[20] 3-Pole only.
[21] The standard enclosure has space for a fused control transformer, **Form FF4T**, on Sizes 0-2 (except 4-pole devices, Size 0 and 1).

© 2019 Schneider Electric
All Rights Reserved
11/20/2019

Courtesy of Steven Engineering, Inc - (800) 258-9200 - sales@steveneng.com - www.stevenengineering.com

NEMA 4, 4X, 7, 9, and 12/3R Enclosures

Table 16.176: See Figure: NEMA 4 and 4X—Stainless Steel *[22]*

NEMA Size	Class Number	Dimensions, in.												Hub Dia.		Weight (lb)	
		A	B	C	D	E	F	G	H	I	J	K	L	W Bot. Only	X Top & Bot.	8702	8736
0*[23]* 1*[23]*	8702, 8736	12.63	7.81	14.69	2.56	7.5	13.5	0.59	3.88	18.41	1.66	2.31	0.31	0.75	1	25	26
2*[23]*	8702, 8736	14.88	8.25	15.75	2.56	9.75	15	0.38	3.88	20.88	1.72	2.63	0.31	0.75	1.5	33	35
3*[24]*	8702	18.16	8.75	32.22	3.08	12	30.5	0.88	3.69	26.72	2.56	3.19	0.44	0.75	2.5	96	—
4*[24]*	8736	18.16	9.56	32.22	3.08	12	30.5	0.88	4.5	26.72	2.56	3.19	0.44	0.75	2.5	—	99
5	8702	35.22	12.13	49.22	4.11	27	48	0.63	4.59	45.81	2.97	3.5	0.56	0.75	3.5	300	—
	8736	35.22	12.94	49.22	4.11	27	48	0.63	5.41	45.81	2.97	3.5	0.56	0.75	3.5	—	317
6	8702, 8736	36.22	19.47	70.13	Floor Mounting											500	505
7	8702, 8736	34.5	23.5	101												—	—

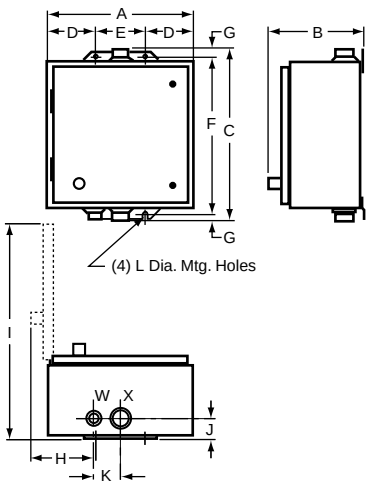

Figure 16.12: NEMA 4 and 4X—Stainless Steel

Table 16.177: Bolted Cover, Cast Aluminum Enclosure—see figure in Table 16.108 NEMA 7 and 9 Enclosures, page 16-41

NEMA Size	Type	Dimensions, in. *[25]*									Wt. (lb)
		G	H	J	K	L	N	P	Q, R	S, T, U, V	
0–2	SBT SCT SDT	14.25	27.63	9.5	12.25	19.25	9.63	11.5	2.38	3.13	115
3–4	SET SFT	24.5	45.63	13.75	22.5	27.5	13.75	15.38	3.44	4	180

NOTE: These dimensions are for reference only. If you need precise measurements, contact the Customer Care Center at 1-888-778-2733.

Table 16.178: Spin Top™ Enclosure—see figure in Table 16.108 NEMA 7 and 9 Enclosures, page 16-41

NEMA Size	Type	Dimensions, in.																					Wt. (lb)
		A	B*[26]*	B*[27]*	C*[26]*	C*[27]*	D	E*[26]*	E*[27]*	F	G*[26]*	G*[27]*	H*[26]*	H*[27]*	J*[26]*	J*[27]*	K	L	M	N	P	R	
0-1	SBR SCR	12	41.06	46.13	68.06	79.13	16.75	7.25	12.25	7.69	26.13	26.13	3	9	24	24	8.5	2.06	9.38	5.25	1.5	0.38	70
2	SDR	16.13	48.5	50.5	81.5	85	20.25	12.13	9.13	8.63	27.75	32.75	8	4.5	25	30	12	2.63	11	5.5	2.5	0.38	100
3	SER	Consult the Customer Care Center at 1-888-778-2733.																					

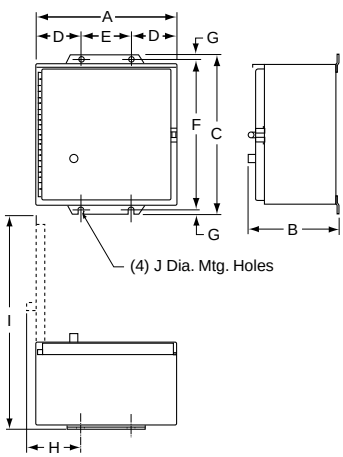

Figure 16.13: NEMA 12/3R

Table 16.179: See Figure: NEMA 12/3R

NEMA Size	Class	Dimensions, in.										Weight (lb)	
		A	B	C	D	E	F	G	H	I	J	8702	8736
0*[23]* 1*[23]*	8702 8736	11.88	7.75	13.75	2.56	6.75	12.75	0.5	3.66	18.13	0.31	23	24
2*[23]*	8702 8736	14.88	7.88	16	2.56	9.75	15	0.5	3.66	21.25	0.31	31	32
3*[24]*	8702	18.16	9.25	31.5	3.08	12	30.5	0.5	3.69	26.72	0.44	96	—
4*[24]*	8736	18.16	9.56	31.5	3.08	12	30.5	0.5	4.5	26.72	0.44	—	99
5	8702	35.22	13.13	49	4.13	27	48	0.5	5.31	45.88	0.56	302	—
	8736	35.22	13.94	49	4.13	27	48	0.5	6.13	45.88	0.56	—	319
6	8702 8736	36.22	19.47	62.22	Floor Mounting							490	495
7	8702 8736	34.5	23.5	93								—	—

NOTE: These dimensions are for reference only. If you need precise measurements, contact the Customer Care Center at 1-888-778-2733.

[22] Size 6 and 7 are NEMA 4 sheet steel enclosures.
[23] The standard enclosure has space for a fused control transformer, **Form FF4T**, on Sizes 0-2 (except 4-pole devices, Size 0 and 1).
[24] 3-Pole only.
[25] Dimensions shown for 2 or 3-Pole devices only.
[26] Without control transformer.
[27] With control transformer (**Form FF4T**).

© 2019 Schneider Electric
All Rights Reserved
11/20/2019

Courtesy of Steven Engineering, Inc - (800) 258-9200 - sales@steveneng.com - www.stevenengineering.com

Class 8702 Type W
Reversing Vacuum Contactor

Class 8702 Type W

Class 8702 Type W Reversing Vacuum Contactors are used to switch capacitors, transformers and electric motors where overload protection is separately provided. Type W reversing vacuum contactors are designed for operation at 600 V, 50/60 Hz.

Auxiliary Contacts—An auxiliary contact block, Class 9999 Type WX11, with one normally open contact and one normally closed contact, is used with Size 4, 5 and 6 vacuum contactors. Additional auxiliary contact units may be added to the Size 4 and 5 reversing contactors in the field. A maximum of 2 units may be added to the Size 4; a maximum of 1 unit may be added to the Size 5.

Termination Means—The Size 4 reversing vacuum contactor is supplied with line and load side lugs. The Size 5 and 6 reversing vacuum contactors are supplied without line and load side lugs.

NOTE: In Table 16.180, replace the three bullets (●●●) in the catalog number with the coil voltage code. Refer to the standard coil voltage codes listed in Table 16.182. Replacement coils are listed in Table 16.181.

Table 16.180: Class 8702 Full Voltage Reversing Vacuum Contactors (Horizontal Only) 3-Pole Polyphase—600 Vac Maximum—50–60 Hz

NEMA Size	Enclosed Ampere Rating	Motor Voltage	Maximum Horsepower	Open Style Type
4	135	200 230 380 460 575	40 50 75 100 100	WFO3●●●
5	270	200 230 380 460 575	75 100 150 200 200	WGO3●●●
6	540	200 230 380 460 575	150 200 300 400 400	WHO3V●●●

Table 16.181: Class 9998—Replacement Coils for Class 8702 Reversing Contactors

Size	Type	Poles	Class and Type	Suffix Number (Complete Coil Number Consists of Class and Type Followed by Suffix Number)			
				120 V 110 V	240 V 220 V	480 V 440 V	600 V 550 V
4	WF	All	9998WF	120	240	480	600
5	WG	All	9998WG	120	240	480	600
6	WH	All	9998WH	120	240	480	600

Table 16.182: Coil Voltage Codes

Voltage	110	120	220	240	440	480	550	600
50 Hz	V02		V03		V06		V07	
60 Hz		V02		V03		V06		V07

Table 16.183: Approximate Dimensions

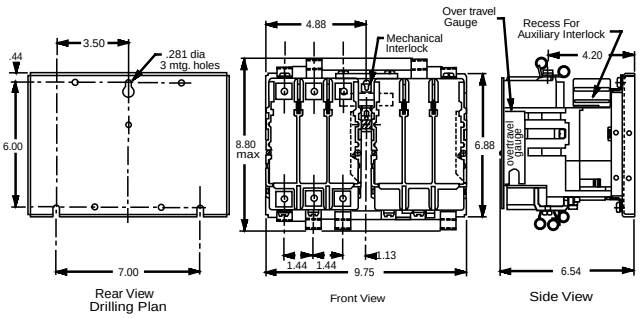

Size 4 Reversing Contactor Outline with Lugs, Class 8702 WF

Table 16.184: Class 9999—Vacuum Starter Kits

For Use With Type	Size	Kit Description	Class 9999 Type
WF–WG WH	4–5 6	Auxiliary Contacts, Non-Convertible 1 N.O. & 1 N.C. Isolated Contacts	WX11
WF WG–WH	4 5–6	Coil Circuit Auxiliary Contacts 1 N.O. & 1 N.C. Isolated Contacts, Delayed Break 1 N.C. Isolated Contact	WCX11 WLX01
WG	5	Lug Kits 6 lugs included	LUW5

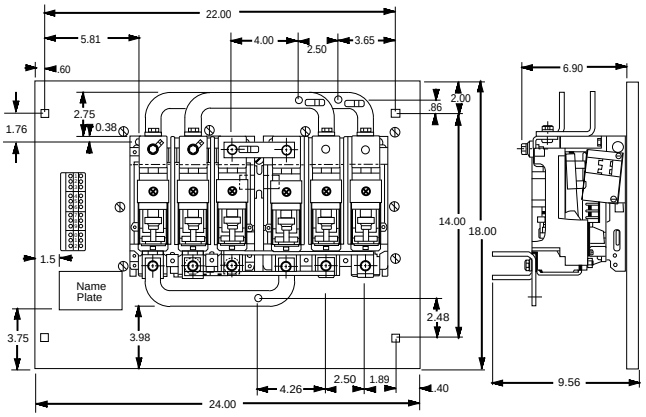

Size 5 Reversing Contactor Outline without Lugs, Class 8702 WG

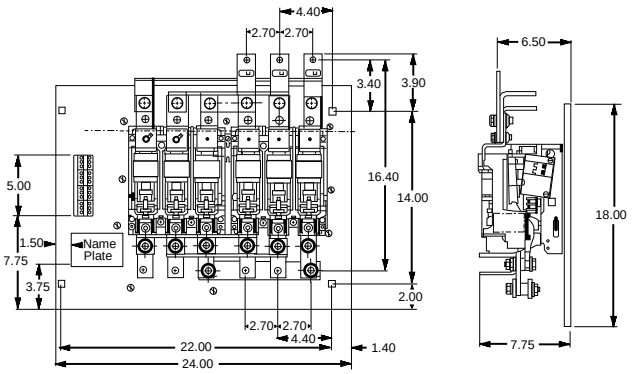

Size 6 Reversing Contactor Outline without Lugs, Class 8702 WH

For How to Order Information, see page 16-28.

© 2019 Schneider Electric
All Rights Reserved
11/20/2019

Courtesy of Steven Engineering, Inc - (800) 258-9200 - sales@steveneng.com - www.stevenengineering.com

Class 8738 Fusible Disconnect Switch Type 3-Pole Polyphase—600 Vac Maximum—50–60 Hz

Class 8738 and 8739 Type S reversing combination starters combine the requirements of motor overload and short circuit protection into one convenient package. Type S reversing combination starters are manufactured in accordance with NEMA standards, and are UL Listed (although some Form numbers may not be listed—contact your nearest Square D/Schneider Electric sales office for further information). Class 8738 and 8739 reversing combination starters are designed to operate at 600 Vac, 50–60 Hz, and are available with one of four types of overload relays. See page 16-62 for more information. For Class J fuses, use Form Y1072 (no charge).

For Form H30• (special lower-FLA factory-assembled starter combinations with Motor Logic SSOLR protection), see Solid-State Overload Relay Forms, page 16-119

Table 16.185: Class 8738 Full-Voltage Type, Fusible (With Class H Fuse Clips) Reversing with Motor Logic SSOLR (replace ••• with the voltage code) *[1]*

Ratings				NEMA 1 General Purpose Enclosure	NEMA 4 & 4X Watertight, Dusttight Stainless Steel (304) Enclosure	NEMA 4X Watertight, Dusttight, Corrosion Resistant Polyester Enclosure	NEMA 12/3R *[2]* Dusttight and Driptight Industrial Use Enclosure	
Motor Voltage (Starter Voltage)	Max. Hp Polyphase	NEMA Size	Fuse Clip Size (A)				With External Reset	Without External Reset
				Type *[3]*	Type *[3]*	Type *[3]*	Type *[3]*	Type *[3]*
200 (208)	3	0	30	SBG12•••H30 *[4]*	SBW12•••H30 *[4]*	SBW22•••H30 *[4]*	SBA22•••H30 *[4]*	SBA12•••H30 *[4]*
	5	1	30	SCG12•••H30 *[4]*	SCW12•••H30 *[4]*	SCW22•••H30 *[4]*	SCA22•••H30 *[4]*	SCA12•••H30 *[4]*
	7.5		60	SCG13•••H30 *[4]*	SCW13•••H30 *[4]*	SCW23•••H30 *[4]*	SCA23•••H30 *[4]*	SCA13•••H30 *[4]*
	10	2	60	SDG12•••H30 *[4]*	SDW12•••H30 *[4]*	SDW22•••H30 *[4]*	SDA22•••H30 *[4]*	SDA12•••H30 *[4]*
	20	3	100	SEG15•••H30	SEW15•••H30	—	SEA25•••H30	SEA15•••H30
	40	4	200	SFG15•••H30	SFW15•••H30	—	SFA25•••H30	SFA15•••H30
	75	5	400	SGG15•••H30	SGW15•••H30	—	SGA25•••H30	SGA15•••H30
230 (240)	3	0	30	SBG12•••H30 *[4]*	SBW12•••H30 *[4]*	SBW22•••H30 *[4]*	SBA22•••H30 *[4]*	SBA12•••H30 *[4]*
	5	1	30	SCG12•••H30 *[4]*	SCW12•••H30 *[4]*	SCW22•••H30 *[4]*	SCA22•••H30 *[4]*	SCA12•••H30 *[4]*
	7.5		60	SCG13•••H30 *[4]*	SCW13•••H30 *[4]*	SCW23•••H30 *[4]*	SCA23•••H30 *[4]*	SCA13•••H30 *[4]*
	15	2	60	SDG12•••H30 *[4]*	SDW12•••H30 *[4]*	SDW22•••H30 *[4]*	SDA22•••H30 *[4]*	SDA12•••H30 *[4]*
	25	3	100	SEG15•••H30	SEW15•••H30	—	SEA25•••H30	SEA15•••H30
	50	4	200	SFG15•••H30	SFW15•••H30	—	SFA25•••H30	SFA15•••H30
	100	5	400	SGG15•••H30	SGW15•••H30	—	SGA25•••H30	SGA1•••H30
460 (480)	5	0	30	SBG13•••H30 *[4]*	SBW13•••H30 *[4]*	SBW23•••H30 *[4]*	SBA23•••H30 *[4]*	SBA13•••H30 *[4]*
	10	1	30	SCG14•••H30 *[4]*	SCW14•••H30 *[4]*	SCW24•••H30 *[4]*	SCA24•••H30 *[4]*	SCA14•••H30 *[4]*
	15	2	30	SDG16•••H301	SDW16•••H301	SDW26•••H301	SDA26•••H301	SDA16•••H301
	25		60	SDG14•••H30 *[4]*	SDW14•••H30 *[4]*	SDW24•••H30 *[4]*	SDA24•••H30 *[4]*	SDA14•••H30 *[4]*
	50	3	100	SEG13•••H30	SEW13•••H30	—	SEA23•••H30	SEA13•••H30
	100	4	200	SFG13•••H30	SFW13•••H30	—	SFA23•••H30	SFA13•••H30
	200	5	400	SGG13•••H30	SGW13•••H30	—	SGA23•••H30	SGA13•••H30
575 (600)	5	0	30	SBG13•••H30	SBW13•••H30	SBW23•••H30	SBA23•••H30	SBA13•••H30
	10	1	30	SCG14•••H301	SCW14•••H301	SCW24•••H301	SCA24•••H301	SCA14•••H301
	15	2	30	SDG16•••H30	SDW16•••H30	SDW26•••H30	SDA26•••H30	SDA16•••H30
	25		60	SDG14•••H30	SDW14•••H30	SDW24•••H30	SDA24•••H30	SDA14•••H30
	50	3	100	SEG13•••H30	SEW13•••H30	—	SEA23•••H30	SEA13•••H30
	100	4	200	SFG13•••H30	SFW13•••H30	—	SFA23•••H30	SFA13•••H30
	200	5	400	SGG13•••H30	SGW13•••H30	—	SGA23•••H30	SGA13•••H30

Table 16.186: Coil Voltage Codes

Voltage		Code
60 Hz	50 Hz	
24*[5]*	—	V01
120*[6]*	110	V02
208	—	V08
240	220	V03
277	—	V04
480	440	V06
600	550	V07
Specify	Specify	V99

NOTE: For voltage codes used with control transformers, see page 16-118. Form S (separate control) is used when a separate source of power is available for the control (coil) voltage. Form S is available at no charge.

Dimensions: page 16-72
Factory Modifications (Forms): page 16-117
Replacement Parts (Class 9998): page 16-122
Type S Accessories (Class 9999): page 16-125

For How to Order Information, see page 16-28.

[1] To order melting alloy overload relay, remove form "H30" from part number.
[2] NEMA 12 enclosures can be field modified for outdoor non-corrosive and non–service entrance rated applications. See page 16-112 for more information.
[3] Replace the three bullets (•••) in the catalog number with the coil voltage code. Refer to the standard coil voltage codes shown in Table 16.186.
[4] **Form H30**, with the possibility of a fourth character to select a lower FLA range (for example, **H308**). See "Solid-State Overload Relay Forms" on page 16-119
[5] 24 V coils are not available on Sizes 4–7. On Sizes 00–3, where 24 V coils are available, **Form S** (separate control) must be specified (for example, order as 8738SBG12V01S).
[6] These voltage codes must include **Form S** (supplied at no charge) (for example, order as 8738SC13V02S).

© 2019 Schneider Electric
All Rights Reserved
11/20/2019

Courtesy of Steven Engineering, Inc - (800) 258-9200 - sales@steveneng.com - www.stevenengineering.com

Non-Fusible and Fusible Disconnect Switch Type 3-Pole Polyphase—600 Vac Maximum—50–60 Hz

For Form H30• (special lower-FLA factory-assembled starter combinations with Motor Logic SSOLR protection), see Solid-State Overload Relay Forms, page 16-119

Table 16.187: Class 8738 Non-Fusible Disconnect Switch Type—Full-Voltage, Reversing, with Motor Logic SSOLR (replace ●●● with the voltage code) *[7]*

Ratings				NEMA 1 General Purpose Enclosure	NEMA 4 & 4X Watertight, Dusttight, Stainless Steel (304) Enclosure	NEMA 4X Watertight, Dusttight, Corrosion Resistant Polyester Enclosure	NEMA 12/3R *[8]* Dusttight and Driptight Industrial Use Enclosure	
Motor Voltage (Starter Voltage)	Max. Hp Polyphase	NEMA Size	Fuse Clip Size (A)				With External Reset	Without External Reset
				Type *[9]*	Type *[9]*	Type *[9]*	Type *[9]*	Type *[9]*
200 (208)	3	0	None	SBG11●●●H30 *[10]*	SBW11●●●H30 *[10]*	SBW21●●●H30 *[10]*	SBA21●●●H30 *[10]*	SBA11●●●H30 *[10]*
	7-1/2	1	None	SCG11●●●H30 *[10]*	SCW11●●●H30 *[10]*	SCW21●●●H30 *[10]*	SCA21●●●H30 *[10]*	SCA11●●●H30 *[10]*
	10	2	None	SDG11●●●H30 *[10]*	SDW11●●●H30 *[10]*	SDW21●●●H30 *[10]*	SDA21●●●H30 *[10]*	SDA11●●●H30 *[10]*
	25	3	None	SEG11●●●H30	SEW11●●●H30	—	SEA21●●●H30	SEA11●●●H30
	40	4	None	SFG11●●●H30	SFW11●●●H30	—	SFA21●●●H30	SFA11●●●H30
	75	5	None	SGG11●●●H30	SGW11●●●H30	—	SGA21●●●H30	SGA11●●●H30
230 (240)	3	0	None	SBG11●●●H30 *[10]*	SBW11●●●H30 *[10]*	SBW21●●●H30 *[10]*	SBA21●●●H30 *[10]*	SBA11●●●H30 *[10]*
	7-1/2	1	None	SCG11●●●H30 *[10]*	SCW11●●●H30 *[10]*	SCW21●●●H30 *[10]*	SCA21●●●H30 *[10]*	SCA11●●●H30 *[10]*
	15	2	None	SDG11●●●H30 *[10]*	SDW11●●●H30 *[10]*	SDW21●●●H30 *[10]*	SDA21●●●H30 *[10]*	SDA11●●●H30 *[10]*
	30	3	None	SEG11●●●H30	SEW11●●●H30	—	SEA21●●●H30	SEA11●●●H30
	50	4	None	SFG11●●●H30	SFW11●●●H30	—	SFA21●●●H30	SFA11●●●H30
	100	5	None	SGG11●●●H30	SGW11●●●H30	—	SGA21●●●H30	SGA11●●●H30
460 (480)	5	0	None	SBG11●●●H30 *[10]*	SBW11●●●H30 *[10]*	SBW21●●●H30 *[10]*	SBA21●●●H30 *[10]*	SBA11●●●H30 *[10]*
	10	1	None	SCG11●●●H30 *[10]*	SCW11●●●H30 *[10]*	SCW21●●●H30 *[10]*	SCA21●●●H30 *[10]*	SCA11●●●H30 *[10]*
	25	2	None	SDG11●●●H30 *[10]*	SDW11●●●H30 *[10]*	SDW21●●●H30 *[10]*	SDA21●●●H30 *[10]*	SDA11●●●H30 *[10]*
	50	3	None	SEG11●●●H30	SEW11●●●H30	—	SEA21●●●H30	SEA11●●●H30
	100	4	None	SFG11●●●H30	SFW11●●●H30	—	SFA21●●●H30	SFA11●●●H30
	200	5	None	SGG11●●●H30	SGW11●●●H30	—	SGA21●●●H30	SGA11●●●H30
575 (600)	5	0	None	SBG11●●●H30 *[10]*	SBW11●●●H30 *[10]*	SBW21●●●H30 *[10]*	SBA21●●●H30 *[10]*	SBA11●●●H30 *[10]*
	10	1	None	SCG11●●●H30 *[10]*	SCW11●●●H30 *[10]*	SCW21●●●H30 *[10]*	SCA21●●●H30 *[10]*	SCA11●●●H30 *[10]*
	25	2	None	SDG11●●●H30 *[10]*	SDW11●●●H30 *[10]*	SDW21●●●H30 *[10]*	SDA21●●●H30 *[10]*	SDA11●●●H30 *[10]*
	50	3	None	SEG11●●●H30	SEW11●●●H30	—	SEA21●●●H30	SEA11●●●H30
	100	4	None	SFG11●●●H30	SFW11●●●H30	—	SFA21●●●H30	SFA11●●●H30
	200	5	None	SGG11●●●H30	SGW11●●●H30	—	SGA21●●●H30	SGA11●●●H30

Table 16.188: Class 8738 Fusible Disconnect Switch Type with Class R Fuse Clips—100,000 AIC Rating (replace ●●● with the voltage code) *[7]*

Ratings				NEMA 1 General Purpose Enclosure	NEMA 4 & 4X Watertight, Dusttight, Stainless Steel (304) Enclosure	NEMA 4X Watertight, Dusttight, Corrosion Resistant Polyester Enclosure *[11]*	NEMA 12/3R *[8]* Dusttight and Driptight Industrial Use Enclosure	
Motor Voltage (Starter Voltage)	Max. Hp Polyphase	NEMA Size	Fuse Clip Size (A)				With External Reset	Without External Reset
				Type *[9]*	Type *[9]*	Type *[9]*	Type *[9]*	Type *[9]*
200 (208)	3	0	30	SBG32●●●H30 *[10]*	SBW32●●●H30 *[10]*	SBW42●●●H30 *[10]*	SBA42●●●H30 *[10]*	SBA32●●●H30 *[10]*
	5	1	30	SCG32●●●H30 *[10]*	SCW32●●●H30 *[10]*	SCW42●●●H30 *[10]*	SCA42●●●H30 *[10]*	SCA32●●●H30 *[10]*
	7-1/2		60	SCG33●●●H30 *[10]*	SCW33●●●H30 *[10]*	SCW43●●●H30 *[10]*	SCA43●●●H30 *[10]*	SCA33●●●H30 *[10]*
	10	2	60	SDG32●●●H30 *[10]*	SDW32●●●H30 *[10]*	SDW42●●●H30 *[10]*	SDA42●●●H30 *[10]*	SDA32●●●H30 *[10]*
	20	3	100	SEG35●●●H30	SEW35●●●H30	—	SEA45●●●H30	SEA35●●●H30
	40	4	200	SFG35●●●H30	SFW35●●●H30	—	SFA45●●●H30	SFA35●●●H30
	75	5	400	SGG35●●●H30	SGW35●●●H30	—	SGA45●●●H30	SGA35●●●H30
230 (240)	3	0	30	SBG32●●●H30 *[10]*	SBW32●●●H30 *[10]*	SBW42●●●H30 *[10]*	SBA42●●●H30 *[10]*	SBA32●●●H30 *[10]*
	5	1	30	SCG32●●●H30 *[10]*	SCW32●●●H30 *[10]*	SCW42●●●H30 *[10]*	SCA42●●●H30 *[10]*	SCA32●●●H30 *[10]*
	7-1/2		60	SCG33●●●H30 *[10]*	SCW33●●●H30 *[10]*	SCW43●●●H30 *[10]*	SCA43●●●H30 *[10]*	SCA33●●●H30 *[10]*
	15	2	60	SDG32●●●H30 *[10]*	SDW32●●●H30 *[10]*	SDW42●●●H30 *[10]*	SDA42●●●H30 *[10]*	SDA32●●●H30 *[10]*
	25	3	100	SEG35●●●H30	SEW35●●●H30	—	SEA45●●●H30	SEA3●●●H30
	50	4	200	SFG35●●●H30	SFW35●●●H30	—	SFA45●●●H30	SFA35●●●H30
	100	5	400	SGG35●●●H30	SGW35●●●H30	—	SGA45●●●H30	SGA35●●●H30
460 (480)	5	0	30	SBG33●●●H30 *[10]*	SBW33●●●H30 *[10]*	SBW43●●●H30 *[10]*	SBA43●●●H30 *[10]*	SBA33●●●H30 *[10]*
	10	1	30	SCG34●●●H30 *[10]*	SCW34●●●H30 *[10]*	SCW44●●●H30 *[10]*	SCA44●●●H30 *[10]*	SCA34●●●H30 *[10]*
	15	2	30	SDG36●●●H301	SDW36●●●H301	SDW46●●●H301	SDA46●●●H301	SDA36●●●H301
	25		60	SDG34●●●H30 *[10]*	SDW34●●●H30 *[10]*	SDW44●●●H30 *[10]*	SDA44●●●H30 *[10]*	SDA34●●●H30 *[10]*
	50	3	100	SEG33●●●H30	SEW33●●●H30	—	SEA43●●●H30	SEA33●●●H30
	100	4	200	SFG33●●●H30	SFW33●●●H30	—	SFA43●●●H30	SFA33●●●H30
	200	5	400	SGG33●●●H30	SGW33●●●H30	—	SGA43●●●H30	SGA33●●●H30
575 (600)	5	0	30	SBG33●●●H30 *[10]*	SBW33●●●H30 *[10]*	SBW43●●●H30 *[10]*	SBA43●●●H30 *[10]*	SBA33●●●H30 *[10]*
	10	1	30	SCG34●●●H30 *[10]*	SCW34●●●H30 *[10]*	SCW44●●●H30 *[10]*	SCA44●●●H30 *[10]*	SCA34●●●H30 *[10]*
	15	2	30	SDG36●●●H301	SDW36●●●H301	SDW46●●●H301	SDA46●●●H301	SDA36●●●H301
	25		60	SDG34●●●H30 *[10]*	SDW34●●●H30 *[10]*	SDW44●●●H30 *[10]*	SDA44●●●H30 *[10]*	SDA34●●●H30 *[10]*
	50	3	100	SEG33●●●H30	SEW33●●●H30	—	SEA43●●●H30	SEA33●●●H30
	100	4	200	SFG33●●●H30	SFW33●●●H30	—	SFA43●●●H30	SFA33●●●H30
	200	5	400	SGG33●●●H30	SGW33●●●H30	—	SGA43●●●H30	SGA33●●●H30

For How to Order Information, see page 16-28.

[7] To order melting alloy overload relay, remove form "H30" from part number.
[8] NEMA 12 enclosures can be field modified for outdoor non-corrosive and non–service entrance rated applications. See page 16-112 for more information.
[9] Replace the three bullets (●●●) in the catalog number with the coil voltage code. Refer to the standard coil voltage codes shown inTable 16.190.
[10] **Form H30**, with the possibility of a fourth character to select a lower FLA range (for example, **H308**). See "Solid-State Overload Relay Forms" on page 16-119
[11] 5,000 AIC Rating

© 2019 Schneider Electric
All Rights Reserved
11/20/2019

Courtesy of Steven Engineering, Inc - (800) 258-9200 - sales@steveneng.com - www.stevenengineering.com

Electronic Motor Circuit Protector (MCP)
3-Pole Polyphase—600 Vac Maximum—50–60 Hz

For Form H30• (special lower-FLA factory-assembled starter combinations with Motor Logic SSOLR protection), see Solid-State Overload Relay Forms, page 16-119

Table 16.189: Class 8739 Full-Voltage Type, Reversing with Motor Logic SSOLR (replace ●●● with the voltage code) *[12]*

Ratings				NEMA 1 General Purpose Enclosure	NEMA 4 & 4X Watertight, Dusttight, Stainless Steel (304) Enclosure (Sizes 0-5)*[13]*	NEMA 4X Watertight, Dusttight, Corrosion Resistant Polyester Enclosure	NEMA 12/3R*[14]* Dusttight and Driptight Industrial Use Enclosure	
Motor Voltage (Starter Voltage)	NEMA Size	Hp Range Polyphase	Circuit Breaker (See Page 7-32 for Breaker Adjustment Range)				With External Reset	Without External Reset
				Type *[15]*	Type *[15]*	Type *[15]*	Type *[15]*	Type *[15]*
200 (208)	0	0.25–3	HLL36030M71	SBG43●●●H30 *[16]*	SBW43●●●H30 *[16]*	SBW53●●●H30 *[16]*	SBA53●●●H30 *[16]*	SBA43●●●H30 *[16]*
	1	0.25–5	HLL36030M71	SCG44●●●H30 *[16]*	SCW44●●●H30 *[16]*	SCW54●●●H30 *[16]*	SCA54●●●H30 *[16]*	SCA44●●●H30 *[16]*
		7.5	HLL36050M72	SCG45●●●H30 *[16]*	SCW45●●●H30 *[16]*	SCW55●●●H30 *[16]*	SCA55●●●H30 *[16]*	SCA45●●●H30 *[16]*
	2	1.5–5	HLL36030M71	SDG42●●●H301	SDW42●●●H301	SDW52●●●H301	SDA52●●●H301	SDA42●●●H301
		7.5–10	HLL36050M72	SDG43●●●H30 *[16]*	SDW43●●●H30 *[16]*	SDW53●●●H30 *[16]*	SDA53●●●H30 *[16]*	SDA43●●●H30 *[16]*
	3	15–25	HLL36100M73	SEG42●●●H30	SEW42●●●H30	SEW52●●●H30	SEA52●●●H30	SEA42●●●H30
	4	30–40	JJL36250M75	SFG44●●●H30	SFW44●●●H30	SFW54●●●H30	SFA54●●●H30	SFA44●●●H30
	5	50–60	JLL36250M75	SGG44●●●H30	SGW44●●●H30	—	SGA54●●●H30	SGA44●●●H30
		75	LJL36400M36	SGG45●●●H30	SGW45●●●H30	—	SGA55●●●H30	SGA45●●●H30
	6	100	LJL36400M36	SHG43●●●H30	SHW43●●●H30	—	SHA53●●●H30	SHA43●●●H30
		125–150	LJL36600M42	SHG45●●●H30	SHW45●●●H30	—	SHA55●●●H30	SHA45●●●H30
230 (240)	0	0.25–3	HLL36030M71	SBG43●●●H30 *[16]*	SBW43●●●H30 *[16]*	SBW53●●●H30 *[16]*	SBA53●●●H30 *[16]*	SBA43●●●H30 *[16]*
	1	0.25–7.5	HLL36030M71	SCG44●●●H30 *[16]*	SCW44●●●H30 *[16]*	SCW54●●●H30 *[16]*	SCA54●●●H30 *[16]*	SCA44●●●H30 *[16]*
	2	1.5–7.5	HLL36030M71	SDG42●●●H301	SDW42●●●H301	SDW52●●●H301	SDA52●●●H301	SDA42●●●H301
		10	HLL36050M72	SDG43●●●H30 *[16]*	SDW43●●●H30 *[16]*	SDW53●●●H30 *[16]*	SDA53●●●H30 *[16]*	SDA43●●●H30 *[16]*
		15	HLL36100M73	SDG44●●●H30 *[16]*	SDW44●●●H30 *[16]*	SDW54●●●H30 *[16]*	SDA54●●●H30 *[16]*	SDA44●●●H30 *[16]*
	3	15–30	HLL36100M73	SEG42●●●H30	SEW42●●●H30	SEW52●●●H30	SEA52●●●H30	SEA42●●●H30
	4	40–50	JJL36250M75	SFG44●●●H30	SFW44●●●H30	SFW54●●●H30	SFA54●●●H30	SFA44●●●H30
	5	60	JLL36250M75	SGG44●●●H30	SGW44●●●H30	—	SGA54●●●H30	SGA44●●●H30
		75–100	LJL36400M36	SGG45●●●H30	SGW45●●●H30	—	SGA55●●●H30	SGA45●●●H30
	6	125–150	LJL36600M42	SHG45●●●H30	SHW45●●●H30	—	SHA55●●●H30	SHA45●●●H30
		200	PLL34080M68	SHG46●●●H30	SHW46●●●H30	—	SHA56●●●H30	SHA46●●●H30
460 (480)	0	0.25–5	HLL36030M71	SBG43●●●H30 *[16]*	SBW43●●●H30 *[16]*	SBW53●●●H30 *[16]*	SBA53●●●H30 *[16]*	SBA43●●●H30 *[16]*
	1	0.25–10	HLL36030M71	SCG44●●●H30 *[16]*	SCW44●●●H30 *[16]*	SCW54●●●H30 *[16]*	SCA54●●●H30 *[16]*	SCA44●●●H30 *[16]*
	2	5–15	HLL36030M71	SDG42●●●H301	SDW42●●●H301	SDW52●●●H301	SDA52●●●H301	SDA42●●●H301
		20–25	HLL36050M72	SDG43●●●H30 *[16]*	SDW43●●●H30 *[16]*	SDW53●●●H30 *[16]*	SDA53●●●H30 *[16]*	SDA43●●●H30 *[16]*
	3	20–25 30–50	HLL36050M72 HLL36100M73	SEG41●●●H30 SEG42●●●H30	SEW41●●●H30 SEW42●●●H30	SEW51●●●H30 SEW52●●●H30	SEA51●●●H30 SEA52●●●H30	SEA41●●●H30 SEA42●●●H30
	4	60–100	JLL36250M75	SFG44●●●H30	SFW44●●●H30	SFW54●●●H30	SFA54●●●H30	SFA44●●●H30
	5	125 150–200	JLL36250M75 LJL36400M36	SGG44●●●H30 SGG45●●●H30	SGW44●●●H30 SGW45●●●H30	— —	SGA54●●●H30 SGA55●●●H30	SGA44●●●H30 SGA45●●●H30
	6	250–350 400	LJL36600M42 PLL34080M68	SHG45●●●H30 SHG46●●●H30	SHW45●●●H30 SHW46●●●H30	— —	SHA55●●●H30 SHA56●●●H30	SHA45●●●H30 SHA46●●●H30
575 (600)	0	0.25–5	HLL36030M71	SBG43●●●H30 *[16]*	SBW43●●●H30 *[16]*	SBW53●●●H30 *[16]*	SBA53●●●H30 *[16]*	SBA43●●●H30 *[16]*
	1	0.25–10	HLL36030M71	SCG44●●●H30 *[16]*	SCW44●●●H30 *[16]*	SCW54●●●H30 *[16]*	SCA54●●●H30 *[16]*	SCA44●●●H30 *[16]*
	2	5–20	HLL36030M71	SDG42●●●H301	SDW42●●●H301	SDW52●●●H301	SDA52●●●H301	SDA42●●●H301
		25	HLL36050M72	SDG43●●●H30 *[16]*	SDW43●●●H30 *[16]*	SDW53●●●H30 *[16]*	SDA53●●●H30 *[16]*	SDA43●●●H30 *[16]*
	3	25–30 40–50	HLL36050M72 HLL36100M73	SEG41●●●H30 SEG42●●●H30	SEW41●●●H30 SEW42●●●H30	SEW51●●●H30 SEW52●●●H30	SEA51●●●H30 SEA52●●●H30	SEA41●●●H30 SEA42●●●H30
	4	60–100	JLL36250M75	SFG44●●●H30	SFW44●●●H30	SFW54●●●H30	SFA54●●●H30	SFA44●●●H30
	5	125–150 200	JLL36250M75 LJL36400M36	SGG44●●●H30 SGG45●●●H30	SGW44●●●H30 SGW45●●●H30	— —	SGA54●●●H30 SGA55●●●H30	SGA44●●●H30 SGA45●●●H30
	6	250 300–400	LJL36400M36 LJL36600M42	SHG43●●●H30 SHG45●●●H30	SHW43●●●H30 SHW45●●●H30	— —	SHA53●●●H30 SHA55●●●H30	SHA43●●●H30 SHA45●●●H30

Table 16.190: Coil Voltage Codes

Voltage		Code
60 Hz	50 Hz	
24*[17]*	—	V01
120*[18]*	110	V02
208	—	V08
240	220	V03
277	—	V04
480	440	V06
600	550	V07
Specify	Specify	V99

NOTE: For voltage codes used with control transformers, see page 16-118. Form S (separate control) is used when a separate source of power is available for the control (coil) voltage. Form S is available at no charge.

Dimensions: page 16-72
Factory Modifications (Forms): page 16-117
Replacement Parts (Class 9998): page 16-122
Type S Accessories (Class 9999): page 16-125

For How to Order Information, see page 16-28.

[12] To order melting alloy overload relay, remove form "H30" from part number.
[13] Size 6 starters are NEMA 4 painted sheet steel enclosures.
[14] NEMA 12 enclosures can be field modified for outdoor non-corrosive and non–service entrance rated applications. See page 16-112 for more information.
[15] Replace the three bullets (●●●) in the catalog number with the coil voltage code. Refer to the standard coil voltage codes shown in Table 16.190.
[16] **Form H30**, with the possibility of a fourth character to select a lower FLA range (for example, **H308**). See "Solid-State Overload Relay Forms" on page 16-119
[17] 24 V coils are not available on Sizes 4–7. On Sizes 00–3, where 24 V coils are available, **Form S** (separate control) must be specified (for example, order as 8739SBG41V01S).
[18] These voltage codes must include **Form S** (provided at no charge) (for example, order as 8739SCG41V02S).

© 2019 Schneider Electric
All Rights Reserved
11/20/2019

Courtesy of Steven Engineering, Inc - (800) 258-9200 - sales@steveneng.com - www.stevenengineering.com

Thermal Magnetic Circuit Breaker
3-Pole Polyphase—600 Vac Maximum—50–60 Hz

For Form H30• (special lower-FLA factory-assembled starter combinations with Motor Logic SSOLR protection), see Solid-State Overload Relay Forms, page 16-119

Table 16.191: Class 8739 Full-Voltage Type, Reversing, 200–240 V, with Motor Logic SSOLR (replace ●●● with the voltage code) *[19]*

Ratings					NEMA 1 General Purpose Enclosure	NEMA 4 & 4X Watertight and Dusttight Enclosure Stainless Steel (304) (Sizes 0-5) *[20]*	NEMA 4X Watertight, Dusttight and Corrosion Resistant Polyester Enclosure	NEMA 12/3R *[21]* Dusttight and Driptight Industrial Use Enclosure	
Motor Voltage (Starter Voltage)	Max. Hp Polyphase	NEMA Size	Circuit Breaker Type	Circuit Breaker Ampere Rating	Type *[22]*	Type *[22]*	Type *[22]*	With External Reset Type *[22]*	Without External Reset Type *[22]*
200 (208)	2 3	0	HLL36015 HLL36020	15 20	SBG1●●●H30 *[23]* SBG3●●●H30 *[23]*	SBW1●●●H30 *[23]* SBW3●●●H30 *[23]*	SBW11●●●H30 *[23]* SBW13●●●H30 *[23]*	SBA11●●●H30 *[23]* SBA13●●●H30 *[23]*	SBA1●●●H30 *[23]* SBA3●●●H30 *[23]*
	5 7.5	1	HLL36035 HLL36050	35 50	SCG5●●●H30 *[23]* SCG2●●●H30 *[23]*	SCW5●●●H30 *[23]* SCW2●●●H30 *[23]*	SCW15●●●H30 *[23]* SCW12●●●H30 *[23]*	SCA15●●●H30 *[23]* SCA12●●●H30 *[23]*	SCA5●●●H30 *[23]* SCA2●●●H30 *[23]*
	10	2	HLL36060	60	SDG1●●●H30 *[23]*	SDW1●●●H30 *[23]*	SDW11●●●H30 *[23]*	SDA11●●●H30 *[23]*	SDA1●●●H30 *[23]*
	15 20 25	3	HLL36100 HLL36125 HLL36150	100 125 150	SEG3●●●H30 SEG1●●●H30 SEG5●●●H30	SEW3●●●H30 SEW1●●●H30 SEW5●●●H30	SEW13●●●H30 SEW11●●●H30 SEW15●●●H30	SEA13●●●H30 SEA11●●●H30 SEA15●●●H30	SEA3●●●H30 SEA1●●●H30 SEA5●●●H30
	30 40	4	JLL36200 JLL36250	200 250	SFG3●●●H30 SFG4●●●H30	SFW3●●●H30 SFW4●●●H30	SFW13●●●H30 SFW14●●●H30	SFA13●●●H30 SFA14●●●H30	SFA3●●●H30 SFA4●●●H30
	50 60–75	5	JLL36250 LLL36400U33X	250 400	SGG6●●●H30 SGG4●●●H30	SGW6●●●H30 SGW4●●●H30	— —	SGA16●●●H30 SGA14●●●H30	SGA6●●●H30 SGA4●●●H30
	100–125 150	6	LLL36600U33X MJL36800	600 800	SHG4●●●H30 SHG5●●●H30	SHW4●●●H30 SHW5●●●H30	— —	SHA14●●●H30 SHA15●●●H30	SHA4●●●H30 SHA5●●●H30
230 (240)	2 3	0	HLL36015 HLL36020	15 20	SBG1●●●H30 *[23]* SBG3●●●H30 *[23]*	SBW1●●●H30 *[23]* SBW3●●●H30 *[23]*	SBW11●●●H30 *[23]* SBW13●●●H30 *[23]*	SBA11●●●H30 *[23]* SBA13●●●H30 *[23]*	SBA1●●●H30 *[23]* SBA3●●●H30 *[23]*
	5 7.5	1	HLL36035 HLL36045	35 45	SCG5●●●H30 *[23]* SCG6●●●H30 *[23]*	SCW5●●●H30 *[23]* SCW6●●●H30 *[23]*	SCW15●●●H30 *[23]* SCW16●●●H30 *[23]*	SCA15●●●H30 *[23]* SCA16●●●H30 *[23]*	SCA5●●●H30 *[23]* SCA6●●●H30 *[23]*
	10 15	2	HLL36060 HLL36090	60 90	SDG1●●●H30 *[23]* SDG7●●●H30 *[23]*	SDW1●●●H30 *[23]* SDW7●●●H30 *[23]*	SDW11●●●H30 *[23]* SDW17●●●H30 *[23]*	SDA11●●●H30 *[23]* SDA17●●●H30 *[23]*	SDA1●●●H30 *[23]* SDA7●●●H30 *[23]*
	20 25–30	3	HLL36100 HLL36150	100 150	SEG3●●●H30 SEG5●●●H30	SEW3●●●H30 SEW5●●●H30	SEW13●●●H30 SEW15●●●H30	SEA13●●●H30 SEA15●●●H30	SEA3●●●H30 SEA5●●●H30
	40 50	4	JLL36225 JLL36250	225 250	SFG1●●●H30 SFG4●●●H30	SFW1●●●H30 SFW4●●●H30	SFW11●●●H30 SFW14●●●H30	SFA11●●●H30 SFA14●●●H30	SFA1●●●H30 SFA4●●●H30
	60 75 100	5	JLL36250 LLL36400U33X LLL36600U33X	250 400 600	SGG6●●●H30 SGG4●●●H30 SGG2●●●H30	SGW6●●●H30 SGW4●●●H30 SGW2●●●H30	— — —	SGA16●●●H30 SGA14●●●H30 SGA12●●●H30	SGA6●●●H30 SGA4●●●H30 SGA2●●●H30
	125 150–200	6	LLL36600U33X MJL36800	600 800	SHG4●●●H30 SHG5●●●H30	SHW4●●●H30 SHW5●●●H30	— —	SHA14●●●H30 SHA15●●●H30	SHA4●●●H30 SHA5●●●H30

Table 16.192: Coil Voltage Codes

Voltage 60 Hz	Voltage 50 Hz	Code
24 *[24]*	—	V01
120 *[25]*	110	V02
208	—	V08
240	220	V03
277	—	V04
480	440	V06
600	550	V07
Specify	Specify	V99

NOTE: For voltage codes used with control transformers, see page 16-118. Form S (separate control) is used when a separate source of power is available for the control (coil) voltage. Form S is available at no charge.

Dimensions: page 16-72
Factory Modifications (Forms): page 16-117
Replacement Parts (Class 9998): page 16-122
Type S Accessories (Class 9999): page 16-125

For How to Order Information, see page 16-28.

[19] To order melting alloy overload relay, remove form "H30" from part number.
[20] Size 6 starters are NEMA 4 painted sheet steel enclosures.
[21] NEMA 12 enclosures can be field modified for outdoor non-corrosive and non–service entrance rated applications. See page 16-112 for more information.
[22] Replace the three bullets (●●●) in the catalog number with the coil voltage code. Refer to the standard coil voltage codes shown in Table 16.192.
[23] **Form H30**, with the possibility of a fourth character to select a lower FLA range (for example, **H308**). See "Solid-State Overload Relay Forms" on page 16-119
[24] 24 V coils are not available on Sizes 4–7. On Sizes 00–3, where 24 V coils are available, **Form S** (separate control) must be specified (for example, order as 8739SBG1V01**S**).
[25] These voltage codes must include **Form S** (provided at no charge) (for example, order as 8739SCG5V02**S**).

© 2019 Schneider Electric
All Rights Reserved
11/20/2019

Courtesy of Steven Engineering, Inc - (800) 258-9200 - sales@steveneng.com - www.stevenengineering.com

Thermal Magnetic Circuit Breaker
3-Pole Polyphase—600 Vac Maximum—50–60 Hz

For Form H30• (special lower-FLA factory-assembled starter combinations with Motor Logic SSOLR protection), see Solid-State Overload Relay Forms, page 16-119

Table 16.193: Class 8739 Full-Voltage Type, Reversing, 460–600 V, with Motor Logic SSOLR (replace ●●● with the voltage code) *[26]*

Ratings					NEMA 1 General Purpose Enclosure	NEMA 4 & 4X Watertight Dusttight, Stainless Steel (304) Enclosure (Sizes 0–5) *[27]*	NEMA 4X Watertight, Dusttight, Corrosion Resistant Polyester Enclosure	NEMA 12/3R *[28]* Dusttight and Driptight Industrial Use Enclosure	
Motor Voltage (Starter Voltage)	Max. Hp Polyphase	NEMA Size	Circuit Breaker Type	Circuit Breaker Ampere Rating	Type *[29]*	Type *[29]*	Type *[29]*	With External Reset Type *[29]*	Without External Reset Type *[29]*
460 (480)	5	0	HLL36015	15	SBG1●●●H30 *[30]*	SBW1●●●H30 *[30]*	SBW11●●●H30 *[30]*	SBA11●●●H30 *[30]*	SBA1●●●H30 *[30]*
	7-1/2 10	1	HLL36025 HLL36030	25 30	SCG3●●●H30 *[30]* SCG7●●●H30 *[30]*	SCW3●●●H30 *[30]* SCW7●●●H30 *[30]*	SCW13●●●H30 *[30]* SCW17●●●H30 *[30]*	SCA13●●●H30 *[30]* SCA17●●●H30 *[30]*	SCA3●●●H30 *[30]* SCA7●●●H30 *[30]*
	15 20 25	2	HLL36045 HLL36060 HLL36070	45 60 70	SDG3●●●H30 *[30]* SDG1●●●H30 *[30]* SDG5●●●H30 *[30]*	SDW3●●●H30 *[30]* SDW1●●●H30 *[30]* SDW5●●●H30 *[30]*	SDW13●●●H30 *[30]* SDW11●●●H30 *[30]* SDW15●●●H30 *[30]*	SDA13●●●H30 *[30]* SDA11●●●H30 *[30]* SDA15●●●H30 *[30]*	SDA3●●●H30 *[30]* SDA1●●●H30 *[30]* SDA5●●●H30 *[30]*
	30 40 50	3	HLL36080 HLL36100 HLL36150	80 100 150	SEG6●●●H30 SEG3●●●H30 SEG5●●●H30	SEW6●●●H30 SEW3●●●H30 SEW5●●●H30	SEW16●●●H30 SEW13●●●H30 SEW15●●●H30	SEA16●●●H30 SEA13●●●H30 SEA15●●●H30	SEA6●●●H30 SEA3●●●H30 SEA5●●●H30
	60 75 100	4	JJL36105 JJL36200 JJL36250	150 200 250	SFG5●●●H30 SFG3●●●H30 SFG4●●●H30	SFW5●●●H30 SFW3●●●H30 SFW4●●●H30	SFW15●●●H30 SFW13●●●H30 SFW14●●●H30	SFA15●●●H30 SFA13●●●H30 SFA14●●●H30	SFA5●●●H30 SFA3●●●H30 SFA4●●●H30
	125–150 200	5	LLL36400U33X LLL36600U33X	400 600	SGG4●●●H30 SGG2●●●H30	SGW4●●●H30 SGW2●●●H30	— —	SGA14●●●H30 SGA12●●●H30	SGA4●●●H30 SGA2●●●H30
	250 300–400	6	LLL36600U33X MJL36800	600 800	SHG4●●●H30 SHG5●●●H30	SHW4●●●H30 SHW5●●●H30	— —	SHA14●●●H30 SHA15●●●H30	SHA4●●●H30 SHA5●●●H30
575 (600)	5	0	HLL36015	15	SBG1●●●H30	SBW1●●●H30	SBW11●●●H30	SBA11●●●H30	SBA1●●●H30
	7-1/2 10	1	HLL36020 HLL36025	20 25	SCG8●●●H30 SCG3●●●H30	SCW8●●●H30 SCW3●●●H30	SCW18●●●H30 SCW13●●●H30	SCA18●●●H30 SCA13●●●H30	SCA8●●●H30 SCA3●●●H30
	15 20 25	2	HLL36035 HLL36045 HLL36060	35 45 60	SDG8●●●H301 SDG3●●●H30 SDG1●●●H30	SDW8●●●H301 SDW3●●●H30 SDW1●●●H30	SDW18●●●H301 SDW13●●●H30 SDW11●●●H30	SDA18●●●H301 SDA13●●●H30 SDA12●●●H30	SDA8●●●H301 SDA3●●●H30 SDA1●●●H30
	30 40 50	3	HLL36070 HLL36090 HLL36100	70 90 100	SEG4●●●H30 SEG6●●●H30 SEG3●●●H30	SEW4●●●H30 SEW6●●●H30 SEW3●●●H30	SEW14●●●H30 SEW16●●●H30 SEW13●●●H30	SEA14●●●H30 SEA16●●●H30 SEA13●●●H30	SEA4●●●H30 SEA6●●●H30 SEA3●●●H30
	60–75 100	4	JLL36150 JLL36250	150 250	SFG5●●●H30 SFG4●●●H30	SFW5●●●H30 SFW4●●●H30	SFW15●●●H30 SFW14●●●H30	SFA15●●●H30 SFA14●●●H30	SFA5●●●H30 SFA4●●●H30
	125–150 200	5	JLL36250 LLL36400U33X	250 400	SGG6●●●H30 SGG4●●●H30	SGW6●●●H30 SGW4●●●H30	— —	SGA16●●●H30 SGA14●●●H30	SGA6●●●H30 SGA4●●●H30
	250–350 400	6	LLL36600U33X MJL36800	600 800	SHG4●●●H30 SHG5●●●H30	SHW4●●●H30 SHW5●●●H30	— —	SHA14●●●H30 SHA15●●●H30	SHA4●●●H30 SHA5●●●H30

Table 16.194: Coil Voltage Codes

Voltage		Code
60 Hz	50 Hz	
24 *[31]*	—	V01
120 *[32]*	110	V02
208	—	V08
240	220	V03
480	440	V06
600	550	V07
Specify	Specify	V99

NOTE: For voltage codes used with control transformers, see page 16-118. Form S (separate control) is used when a separate source of power is available for the control (coil) voltage. Form S is available at no charge.

For How to Order Information, see page 16-28.

Table 16.195: Class 8738 UL Listed Short Circuit Ratings

NEMA Size	Fuse Clip Type	Enclosure *[33]*	Ampere Interrupting Capability Rating (AIC)
0–3	Standard	Standard	5,000
0–3	Class R	Standard	100,000
4–5	Standard	Standard	10,000
4–5	Class R	Standard	100,000

Table 16.196: Class 8739 UL Listed Short Circuit Ratings

Motor Circuit Protector Type			
NEMA Size	Voltage	Enclosure *[33]*	Ampere Interrupting Capability Rating (AIC)
0–1	480	Standard	100,000
0–1	481 – 600	Standard	35,000
2–5	480	Standard	100,000
2–5	481 – 600	Standard	50,000
6	480	Standard	65,000
6	600	Standard	18,000
Thermal Magnetic Circuit Breaker Type			
0–1	480	Standard	100,000
0–1	481–600	Standard	35,000
2–5	480	Standard	100,000
2–5	481–600	Standard	50,000
6	480	Standard	65,000
6	600	Standard	18,000

[26] To order melting alloy overload relay, remove form "H30" from part number.
[27] Size 6 starters are NEMA 4 painted sheet steel enclosures.
[28] NEMA 12 enclosures can be field modified for outdoor non-corrosive and non–service entrance rated applications. See page 16-112 for more information.
[29] Replace the three bullets (●●●) in the catalog number with the coil voltage code. Refer to the standard coil voltage codes shown in Table 16.194.
[30] **Form H30**, with the possibility of a fourth character to select a lower FLA range (for example, **H308**). See "Solid-State Overload Relay Forms" on page 16-119
[31] 24 V coils are not available on Sizes 4–7. On Sizes 00–3, where 24 V coils are available, **Form S** (separate control) must be specified (for example, order as 8739SBG2V01S).
[32] These voltage codes must include **Form S** (provided at no charge) (for example, order as 8739SDG3V02S).
[33] Standard enclosures include NEMA 1; 4 and 4X stainless; and 12/3R.

© 2019 Schneider Electric
All Rights Reserved
11/20/2019

Courtesy of Steven Engineering, Inc - (800) 258-9200 - sales@steveneng.com - www.stevenengineering.com

NEMA 1, 12, and 3R Dimensions

NOTE: These dimensions are for reference only. If you need precise measurements, contact the Customer Care Center at 1-888-778-2733.

Table 16.197: See Figure: NEMA 1 Enclosure (Sizes 0–2), page 16-72

NEMA Size	Class	Type	Dimensions (in.) [34]																Top & Bottom		Sides	Wt. (lb)
			A	B	C	D	E	F	G	H	I	J	K	L	M	N	O	P	W	X	Y	
0–1	8738, 8739	SBG SCG	13.75	23	8.34	10.63	21	18.91	1.88	1.88	3.75	2.31	1.06	3.25	2.19	1.25	0.88	—	0.25–0.75–1	0.25–0.75–1	0.25	49
2	8738, 8739	SDG	15	28.75	9.59	11.63	26.25	21.47	2.19	2	4	2.56	1.25	3.25	2.19	1.25	0.91	—	1–1.25	1–1.25	0.25	80

Table 16.198: See Figure: NEMA 1 Enclosure (Sizes 3–6), page 16-72

NEMA Size	Class	Type	Dimensions (in.) [34]																Top & Bottom		Sides	Wt. (lb)
			A	B	C	D	E	F	G	H	I	J	K	L	M	N	O	P	W	X	Y	
3	8738, 8739	SEG	18.5	44	10.59	12.5	3	25.97	43.5	0.25	—	2.81	3.5	5	2.69	5.38	1.22	0.91	1–1.25 2–2.25	0.25–0.75	0.25	245
4	8738	SFG	21	51.5	10.53	15	3	30.72	51	0.25	—	2.81	3.5	5	2.69	5.38	1.22	0.91	2.5	0.25–0.75	0.25	—
	8739	SFG	18.5	44	10.59	12.5	3	25.97	43.5	0.25	—	2.81	3.5	5	2.69	5.38	1.22	0.91	1–1.25 2–2.25	0.25–0.75	0.25	—
5	8738	SGG	30	77	15.5	22	4	39.41	76	0.25	—	3.5	6.28	9.25	3.19	—	—	—	0.25–0.75	3	—	—
	8739	SGG	30	65	13.72	22	4	39.41	64	0.25	—	3.5	6.28	5	3.19	—	—	—	0.25–0.75	3	—	—
6	8738, 8739	SHG	36	90	17.03	—	—	—	—	—	—	—	—	—	—	—	—	—	—	—	—	—

Table 16.199: See Figure: NEMA 12/3R Enclosure, page 16-72

NEMA Size	Class	Type	Dimensions (in.) [34]										Wt. (lb)
			A	B	C	D	E	F	G	H	I	J	
0–1	8738, 8739	SBA SCA	13.75	10.09	24.75	3.25	2.5	8.75	24	0.38	3.75	20.31	52
2	8738, 8739	SDA	15	10.97	31	3.25	3	9	30.25	0.38	3.75	23.44	95
3	8738, 8739	SEA	18.5	10.59	45	5	3	12.5	44	0.25	3.75	25.59	255
4	8738	SFA	21	10.59	52.5	5	3	15	51.5	0.25	3.75	30.34	—
	8739	SFA	18.5	10.59	45	3.25	3	12.5	44	0.25	3.75	25.59	—
5	8738	SGA	30	15.5	78	9.25	4	22	77	0.25	7.5	39.41	—
	8739	SGA	30	15.5	66	—	4	22	65	0.25	7.5	37.88	—
6 [35]	8739	SHA	36	17.03	90	—	—	—	—	—	—	—	—

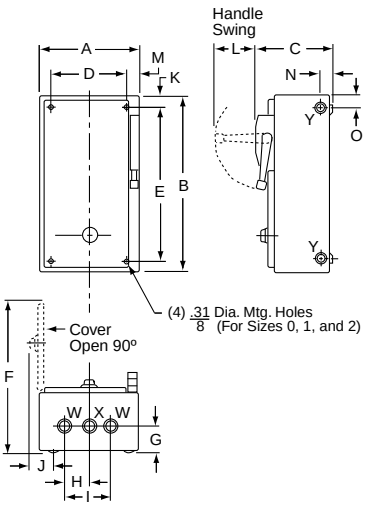

Figure 16.14: NEMA 1 Enclosure (Sizes 0–2)

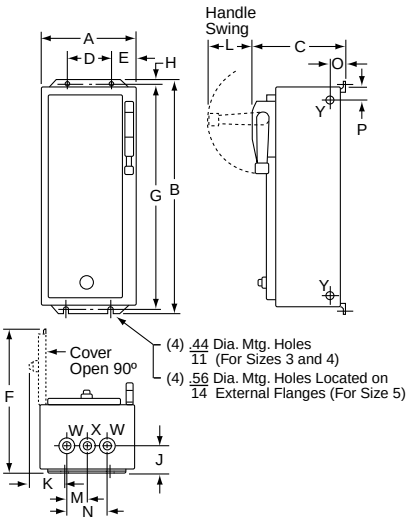

Figure 16.15: NEMA 1 Enclosure (Sizes 3–6)

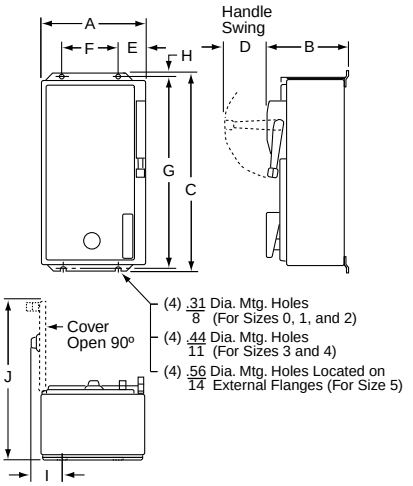

Figure 16.16: NEMA 12/3R Enclosure

NOTE: Illustrations may not represent the actual enclosure; they are intended for dimensional information only.

[34] The dimensions shown in all tables above are also for **Form FF4T** (standard control transformer), **Form FF4T11** (100 VA extra-capacity), and **Form FF4T12** (200 VA extra-capacity).
[35] Size 6 enclosures are floor mounting.

© 2019 Schneider Electric
All Rights Reserved
11/20/2019

Courtesy of Steven Engineering, Inc - (800) 258-9200 - sales@steveneng.com - www.stevenengineering.com

NEMA 4, 4X Dimensions

NOTE: These dimensions are for reference only. If you need precise measurements, contact the Customer Care Center at 1-888-778-2733.

Table 16.200: See Figure: NEMA 4X Polyester Enclosure, page 16-73 *[36]*

NEMA Size	Class	Dimensions (in inches)*[37]*					
		Type	A	B	C	E	F
0-2	8738 & 8739	SBW SCW SDW	25.25	11.4	27.00	17.88	25.75
3-4	8739	SEW SFW	26.31	11.4	33.50	18.50	32.25

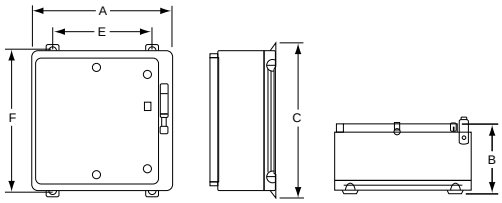

Figure 16.17: NEMA 4X Polyester Enclosure

Table 16.201: See Figure: NEMA 4 & 4X Stainless Steel Enclosure, page 16-73

NEMA Size	Class	Type	Dimensions (in inches) *[38]*												Bottom	Top & Bot.	Wt. (lb)
			A	B	C	D	E	F	G	H	I	J	K	L	W	X	
0–1	8738, 8739	SBW SCW	13.75	8.34	25.19	3.25	2.5	8.75	24	0.59	3	1.63	2.31	18.53	0.75 Hub	1 Hub	52
2	8738, 8739	SDW	15	9.59	30.03	3.25	2.5	10	29.75	0.63	3	2	2.63	21.03	0.75 Hub	1.5 Hub	95
3	8738, 8739	SEW	18.5	10.56	45.19	5	3	12.5	44	0.59	3.5	2.63	3.19	25.5	0.75 Hub	2.5 Hub	255
4	8738	SFW	21	10.53	52.69	5	3	15	51.5	0.59	3.5	2.63	3.19	30.25	0.75 Hub	2.5 Hub	—
	8739	SFW	18.5	10.56	45.19	5	3	12.5	44	0.59	3.5	2.63	3.19	25.5	0.75 Hub	2.5 Hub	—
5	8738	SGW	30	15.5	78.09	9.25	4	22	77	0.56	6.09	3	3.5	39.41	0.75 Hub	3.5 Hub	—
	8739	SGW	30	13.89	66.09	5	4	22	65	0.56	6.09	3	3.5	37.88	0.75 Hub	3.5 Hub	—
6	8739	SHW	36	17.03	98	—	—	—	—	—	—	—	—	—	—	—	—

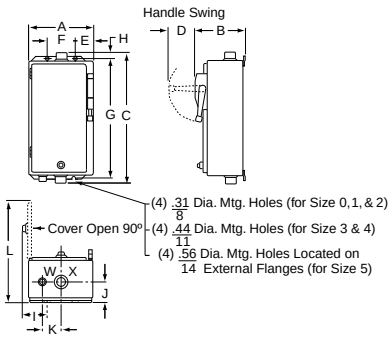

Figure 16.18: NEMA 4 & 4X Stainless Steel Enclosure

NOTE: Illustrations may not represent the actual enclosure; they are intended for dimensional information only.

Information on Hubs

Hubs are supplied with each NEMA 4X combination starter as shown in Table 16.202.

Note that hubs are only installed in stainless steel enclosures; they are supplied but not installed in polyester enclosures.

Table 16.202: Hubs

NEMA Size	Quantity	Hub Size (in.)
0–1	1 2	0.75 1.00
2	1 2	0.75 1.50
3–4	1 2	0.75 2.50

[36] See Table 16.202 for important information on hubs for NEMA 4X enclosures.
[37] The dimensions shown in all tables above are also for **Form FF4T** (standard control transformer), **Form FF4T11** (100 VA extra-capacity), and **Form FF4T12** (200 VA extra-capacity).
[38] Dimensions also for **Form F4T** (standard control transformer), **Form F4T11** (100 VA extra capacity) and **Form F4T12** (200 VA extra capacity).

© 2019 Schneider Electric
All Rights Reserved
11/20/2019

Courtesy of Steven Engineering, Inc - (800) 258-9200 - sales@steveneng.com - www.stevenengineering.com

Type L

Type LX

Features

- LED ready *[1]*
- 30 A fluorescent lighting rating, 20 A tungsten lighting rating
- Electrically and mechanically held
- 2 through 12-pole versions
- Field-convertible contacts with N.O. and N.C. indicators (8 N.C. contacts maximum *[2]*)
- Silver-Cadmium-Oxide double break contacts

NOTE: When ordering contactors with more than 8 poles, the catalog number configuration is the number of normally open contacts followed by a 0 and then the number of normally closed contacts (i.e. for 4 N.O. and 6 N.C. on a 10-pole contactor, order 8903LG406V02).

File E78427 CCN NRNT

File LR60905 Class 3211 07

Table 16.203: Multipole Lighting Contactors (50–60 Hz) (replace ●●● with the voltage code)

Contact Ampere Ratings	No. of Poles	NEMA 1 General Purpose Enclosure	NEMA 1 Flush Mounting General Purpose Enclosure with Plaster Adjustment	NEMA 3R Rainproof Enclosure*[3]*	NEMA 4 & 4X Watertight, Dusttight, and Corrosion-Resistant Glass-Polyester Enclosure	NEMA 4 & 4X Watertight, Dusttight Brushed Stainless Steel Enclosure	NEMA 12/3R*[4]* Dusttight and Driptight Industrial Use Enclosure	Open Type *[5]*
		Type *[6]*	Type *[6]*	Type *[6]*	Type *[6]*	Type *[6]*	Type *[6]*	Type *[6]*
Electrically Held*[2]*								
30 *[6]*	2	LG20●●●	LF20●●●	LH20 ●●●	LWW20●●●	LW20●●●	LA20●●●	LO20 ●●●
	3	LG30 ●●●	LF30 ●●●	LH30 ●●●	LWW30 ●●●	LW30 ●●●	LA30 ●●●	LO30 ●●●
	4	LG40 ●●●	LF40 ●●●	LH40 ●●●	LWW40 ●●●	LW40 ●●●	LA40 ●●●	LO40 ●●●
	6	LG60●●●	LF60●●●	LH60 ●●●	LWW60 ●●●	LW60 ●●●	LA60 ●●●	LO60 ●●●
	8	LG80 ●●●	LF80 ●●●	LH80 ●●●	LWW80 ●●●	LW80 ●●●	LA80●●●	LO80 ●●●
	10	LG1000 ●●●	LF1000 ●●●	LH1000 ●●●	LWW1000 ●●●	LW1000●●●	LA1000 ●●●	LO1000 ●●●
	12	LG1200 ●●●	LF1200 ●●●	LH1200 ●●●	LWW1200 ●●●	LW1200 ●●●	LA1200●●●	LO1200 ●●●
Mechanically Held *[2] [7]*								
30 *[6]*	2	LXG20 ●●●	LXF20 ●●●	—	LXWW20 ●●●	LXW20 ●●●	LXA20 ●●●	LXO20 ●●●
	3	LXG30 ●●●	LXF30 ●●●	—	LXWW30●●●	LXW30 ●●●	LXA30 ●●●	LXO30 ●●●
	4	LXG40 ●●●	LXF40 ●●●	—	LXWW40 ●●●	LXW40 ●●●	LXA40 ●●●	LXO40 ●●●
	6	LXG60 ●●●	LXF60 ●●●	—	LXWW60 ●●●	LXW60 ●●●	LXA60 ●●●	LXO60 ●●●
	8	LXG80 ●●●	LXF80 ●●●	—	LXWW80 ●●●	LXW80 ●●●	LXA80 ●●●	LXO80●●●
	10	LXG1000●●●	LXF1000 ●●●	—	LXWW1000 ●●●	LXW1000 ●●●	LXA1000 ●●●	LXO1000 ●●●
	12	LXG1200 ●●●	LXF1200 ●●●	—	LXWW1200 ●●●	LXW1200 ●●●	LXA120 0●●●	LXO1200 ●●●

NOTE: If a holding circuit contact is required for proper operation, order an additional contact.

Type L3L

Type LO80

Type L3R

Type L1L

Type LO60

Type L1R

Table 16.205: Coil Voltage Codes

Voltage		Code
60 Hz	50 Hz	
24	—	V01
120	110	V02
208	—	V08
240	220	V03
277	—	V04
480	440	V06
Specify	Specify	V99

Power Pole Kits

The kits in Table 16.204 are used to add 30 A power poles to existing Type L contactors when additional circuits are required. Type L lighting contactors come with mounting brackets, so that adder poles may be mounted from the front by a single captive screw. Adder poles come standard with N.O. contacts which are convertible to N.C.

For How to Order Information, see page 16-28.

NOTE: 12 N.C. poles are only available with a 120 V coil (V02).

Table 16.204: Power Poles for Type L or LX

Power Pole Adder Kit*[8]* Class 8903 Type		Can Only Be Added to Contactor Type*[9]*
Single Pole	L1L	LO60 , LXO60, LO80, LXO80, LO1000, LXO1000
	L1R	
Double Pole	L3L	
	L3R	

Table 16.206: How to Order

To Order Specify:		Catalog Number			
		Class	Type	Voltage Code	Form(s)
• Class Number • Type Number	• Voltage Code • Form(s)	8903	LXG60	VO4	CF4R6

Factory Modifications (Forms): page 16-79
Replacement Coils: page 16-122
Replacement Contacts: page 16-124

[1] Conforms to NEMA -410 -2015 and UL508: Table 46.1 and Section 61C test procedures for LED loads up to 16 A at 120 V. Devices were tested to 20 A at 120 V and conform to the test requirements.

[2] Factory conversion of N.O. contacts to N.C., order by catalog number (for example, for 6 N.O. and 2 N.C. poles on an 8 pole contactor, order as 8903LG62V02). Versions are available from the factory with up to 12 N.C. poles for Type L (electrically held) or 2, 4, or 6 N.C. poles for Type LX (mechanically held). For field conversion, there is a maximum of eight N.C. poles for Type L (electrically held) and a maximum of six N.C. poles for Type LX (mechanically held) contactors.

[3] Cannot support control transformer Forms.

[4] NEMA 12 enclosures can be field modified for outdoor non-corrosive and non–service entrance rated applications. See page 16-112 for more information.

[5] Separate enclosures are available for these devices. It may be possible to improve delivery by ordering an open type contactor and separate Class 9991 enclosure.

[6] Replace the three bullets (●●●) in the catalog number with the coil voltage code. Refer to the standard voltage codes listed in Table 16.205. All lighting contactors come with separate control as standard.

[7] When ordering **Form C** on mechanically held devices, you must also include**Form R6**.

[8] 8903LO (electrically held) devices can accommodate 10 or 12 N.C. contacts use **only** 120 V 60Hz coils.

[9] LO60 and LXO60: add single-pole kits only, 1 on each side, for converting to 8-pole. To maintain proper operation, the contactor cannot be converted to more than 8 poles.
LO80 and LXO80: use single-pole kits, 1 on each side, for converting to 10-pole and use two-pole kits, 1 on each side, for converting to 12-pole.
LO1000 and LXO1000: remove the existing single-pole kit and install two-pole kits, 1 on each side, for converting to 12-pole.

© 2019 Schneider Electric
All Rights Reserved
11/20/2019

Courtesy of Steven Engineering, Inc - (800) 258-9200 - sales@steveneng.com - www.stevenengineering.com

Electrically Held

Mechanically Held

Features

- Electrically and mechanically held
- 30–800 A lighting ratings
- LED ready *[10]*
- 2- through 5-pole versions (5-poles through 200 A)
- UL Listed short-circuit rating up to 100,000 Amperes
- Factory wired controls and clearly marked termination points
- Quick ship on most items in 5–7 days

Table 16.207: Coil Voltage Codes

Voltage *[11]*		Code
60 Hz	50 Hz	
24 *[12]*	—	V01
120	110	V02
208	—	V08
240	220	V03
277	—	V04 *[13]*
480	440	V06
Specify	Specify	V99

Table 16.208: Multipole Lighting Contactors—Type S, 50–60 Hz (replace ●●● with the voltage code)

Contact Ampere Ratings	No. of Poles	NEMA 1 General Purpose Enclosure	NEMA 1 Flush Mounting General Purpose Enclosure with Plaster Adjustment	NEMA Type 3R Rainproof Enclosure *[14]*	NEMA 4 & 4X Watertight, Dusttight and Corrosion-Resistant Glass-Polyester Enclosure	NEMA Type 4 & 4X *[15]* Watertight and Dusttight Enclosure	NEMA Type 12/3R *[16]* Dusttight and Driptight Industrial Use Enclosure	Open Type
		Type *[17]*	Type *[17]*	Type *[17]*	Type *[17]*	Type *[17]*	Type *[17]*	Type *[17]*
Electrically Held *[11]*								
30	2	SMG1●●●	SMF1●●●	SMH1●●●	SMW21●●●	SMW1●●●	SMA1●●●	SMO1●●● *[18]*
	3	SMG2●●●	SMF2●●●	SMH2●●●	SMW22●●●	SMW2●●●	SMA2●●●	SMO2●●● *[18]*
	4	SMG3●●●	SMF3●●●	SMH3●●●	SMW23●●●	SMW3●●●	SMA3●●●	SMO3●●● *[18]*
	5	SMG4●●●	SMF4●●●	SMH4●●●	SMW24●●●	SMW4●●●	SMA4●●●	SMO4●●● *[18]*
60	2	SPG1●●●	SPF1●●●	SPH1●●●	SPW21●●●	SPW1●●●	SPA1●●●	SPO1●●● *[18]*
	3	SPG2●●●	SPF2●●●	SPH2●●●	SPW22●●●	SPW2●●●	SPA2●●●	SPO2●●● *[18]*
	4	SPG3●●●	SPF3●●●	SPH3●●●	SPW23●●●	SPW3●●●	SPA3●●●	SPO3●●● *[18]*
	5	SPG4●●●	SPF4●●●	SPH4●●●	SPW24●●●	SPW4●●●	SPA4●●●	SPO4●●● *[18]*
100	2	SQG1●●●	SQF1●●●	SQH1●●●	SQW21●●●	SQW1●●●	SQA1●●●	SQO1●●● *[18]*
	3	SQG2●●●	SQF2●●●	SQH2●●●	SQW22●●●	SQW2●●●	SQA2●●●	SQO2●●● *[18]*
	4	SQG3●●●	—	SQH3●●●	—	SQW3●●●	SQA3●●●	SQO3●●● *[18]*
	5	SQG4●●●	—	SQH4●●●	—	SQW4●●●	SQA4●●●	SQO4●●● *[18]*
200	2	SVG1●●●	—	SVH1●●●	—	SVW1●●●	SVA1●●●	SVO1●●●
	3	SVG2●●●	—	SVH2●●●	—	SVW2●●●	SVA2●●●	SVO2●●●
	4	SVG3●●●	—	—	—	SVW3●●●	SVA3●●●	SVO3●●●
	5	SVG4●●●	—	—	—	SVW4●●●	SVA4●●●	SVO4●●●
300	2	SXG1●●●	—	—	—	SXW1●●●	SXA1●●●	SXO1●●●
	3	SXG2●●●	—	—	—	SXW2●●●	SXA2●●●	SXO2●●●
400 *[19]*	2	SYG1●●●	—	—	—	SYW1●●●	SYA1●●●	SYO1●●●
	3	SYG2●●●	—	—	—	SYW2●●●	SYA2●●●	SYO2●●●
600 *[19]*	2	SZG1●●●	—	—	—	SZW1●●●	SZA1●●●	SZO1●●●
	3	SZG2●●●	—	—	—	SZW2●●●	SZA2●●●	SZO2●●●
800 *[19]*	2	SJG1●●●	—	—	—	SJW1●●●	SJA1●●●	SJO1●●●
	3	SJG2●●●	—	—	—	SJW2●●●	SJA2●●●	SJO2●●●
Mechanically Held *[11]*								
30	2	SMG10●●●	SMF10●●●	—	SMW31●●●	SMW10●●●	SMA10●●●	SMO10●●● *[18]*
	3	SMG11●●●	SMF11●●●	—	SMW32●●●	SMW11●●●	SMA11●●●	SMO11●●● *[18]*
	4	SMG12●●●	SMF12●●●	—	SMW33●●●	SMW12●●●	SMA12●●●	SMO12●●● *[18]*
	5	SMG13●●●	SMF13●●●	—	SMW34●●●	SMW13●●●	SMA13●●●	SMO13●●● *[18]*
60	2	SPG10●●●	SPF10●●●	—	SPW31●●●	SPW10●●●	SPA10●●●	SPO10●●● *[18]*
	3	SPG11●●●	SPF11●●●	—	SPW32●●●	SPW11●●●	SPA11●●●	SPO11●●● *[18]*
	4	SPG12●●●	SPF12●●●	—	SPW33●●●	SPW12●●●	SPA12●●●	SPO12●●● *[18]*
	5	SPG13●●●	SPF13●●●	—	SPW34●●●	SPW13●●●	SPA13●●●	SPO13●●● *[18]*
100	2	SQG10●●●	SQF10●●●	—	SQW31●●●	SQW10●●●	SQA10●●●	SQO10●●● *[18]*
	3	SQG11●●●	SQF11●●●	—	SQW32●●●	SQW11●●●	SQA11●●●	SQO11●●● *[18]*
	4	SQG12●●●	—	—	—	SQW12●●●	SQA12●●●	SQO12●●● *[18]*
	5	SQG13●●●	—	—	—	SQW13●●●	SQA13●●●	SQO13●●● *[18]*
200	2	SVG10●●●	—	—	—	SVW10●●●	SVA10●●●	SVO10●●●
	3	SVG11●●●	—	—	—	SVW11●●●	SVA11●●●	SVO11●●●
	4	SVG12●●●	—	—	—	SVW12●●●	SVA12●●●	SVO12●●●
300	2	SXG13●●●	—	—	—	SXW13●●●	SXA13●●●	SXO13●●●
	3	SXG14●●●	—	—	—	SXW14●●●	SXA14●●●	SXO14●●●
400	2	SYG16●●●	—	—	—	SYW16●●●	SYA16●●●	SYO16●●●
	3	SYG17●●●	—	—	—	SYW17●●●	SYA17●●●	SYO17●●●
600	2	SZG18●●●	—	—	—	SZW18●●●	SZA18●●●	SZO18●●●
	3	SZG19●●●	—	—	—	SZW19●●●	SZA19●●●	SZO19●●●

NOTE: If a holding circuit contact is required for proper operation, order an additional contact.

[10] Conforms to NEMA -410 -2015 and UL508: Table 46.1 and Section 61C test procedures for LED loads up to 16 A at 120 V. Devices were tested to 20 A at 120 V and conform to the test requirements.
[11] Lighting contactors come with separate control as standard—except electrically held 400, 600, and 800 A devices, which come with common control as standard.
[12] 24 V coils are not available for 200–800 A devices. Contact your local sales office for more information.
[13] On 400–800 A electrically held contactors, for voltage code V04, you must select Form S (separate control).
[14] Cannot support control transformer forms.
[15] **For contactor sizes 30–300 A, NEMA 4 and 4X** enclosures are brush finished stainless steel. Sizes 400–800 A are painted sheet steel.
[16] NEMA 12 enclosures can be field modified for outdoor non-corrosive and non–service entrance rated applications. See page 16-112 for more information.
[17] Replace the three bullets (●●●) in the catalog number with the coil voltage code. Refer to the standard voltage codes in Table 16.207.
[18] Separate enclosures are available for these devices. It may be possible to improve delivery time by ordering an open type contactor and a separate Class 9991 enclosure from the section, Separate Enclosures, page 16-110.
[19] **Form FF4T** comes standard; include the line voltage when ordering. Control voltage is 120–60.

© 2019 Schneider Electric
All Rights Reserved

Courtesy of Steven Engineering, Inc - (800) 258-9200 - sales@steveneng.com - www.stevenengineering.com

Power Pole Kits for Type S Only

A single-pole or double-pole kit can be added to any 2- or 3-pole 30 or 60 A Type S lighting contactor to make a 4- or 5-pole device. Factory assembled 4- and 5-pole contactors utilize the basic 3-pole device with a single or double-pole kit installed. Only one power pole can be added per contactor. Sufficient room is provided in all enclosure styles for the addition of a power pole kit.

Table 16.209: Power Pole Kits for Type S Only

Ampere Rating	Description	Class 9999 Type
30	One N.O. One N.C. One N.O. and One N.C. Two N.O. Two N.C.	SB6 SB7 SB8 SB9 SB10
60	One N.O. One N.C. One N.O. and One N.C. Two N.O. Two N.C.	SB21 *[20]* SB22 *[20]* SB23 *[20]* SB24 *[20]* SB25 *[20]*

Factory Modifications (Forms): page 16-79
Replacement Coils: page 16-122
Replacement Contacts: page 16-124
Dimensions: page 16-83

For How to Order Information, see page 16-28.

[20] When power pole is added to 60 Ampere contactor, a 4-pole coil is also required. Order from Table 16.331. 60 A power poles are suitable for use with copper or aluminum wire.

© 2019 Schneider Electric
All Rights Reserved
11/20/2019

Courtesy of Steven Engineering, Inc - (800) 258-9200 - sales@steveneng.com - www.stevenengineering.com

File E16151
CCN NRNT

NOTE: If a holding circuit contact is required for proper operation, order an additional contact.

Features

The features include: disconnect switch and circuit breaker versions; rugged flange-mounted handle; easy installation; occupation of less space; increased operator protection; room to spare for modifications; Class R fuse clips standard; electrically and mechanically held; 30–600 A.

It is desirable to install the branch-circuit protective device and lighting contactor, combining switching and over-current protection, in one enclosure. Combination lighting contactors are well suited for industrial, highway and area lighting applications, or where a lighting circuit may have to be disconnected for periodic maintenance. They may also be used for resistance heating loads.

Table 16.210: Fusible or Non-Fusible Disconnect Switch—3-Pole, 50–60 Hz (replace ●●● with the voltage code)

Contactor Ampere Rating	Fuse Clip Size (A)	Fuse Clip Spacing (V)	NEMA 1 General Purpose Enclosure	NEMA 4 & 4X *[21]* Watertight and Dusttight Enclosure Stainless Steel	NEMA 12/3R*[22]* Dusttight, Oiltight Driptight, Industrial Use Enclosure
			Type *[23]*	Type *[23]*	Type *[23]*
Electrically Held*[24]*					
30	None 30 30	— 600 250	SMG60●●● SMG61●●● SMG62●●●	SMW60●●● SMW61●●● SMW62●●●	SMA60●●● SMA61●●● SMA62●●●
60	None 60 60	— 600 250	SPG60●●● SPG61●●● SPG62●●●	SPW60●●● SPW61●●● SPW62●●●	SPA60●●● SPA61●●● SPA62●●●
100	None 100 100	— 600 250	SQG60●●● SQG61●●● SQG62●●●	SQW60●●● SQW61●●● SQW62●●●	SQA60●●● SQA61●●● SQA62●●●
200	None 200 200	— 600 250	SVG60●●● SVG61●●● SVG62●●●	SVW60●●● SVW61●●● SVW62●●●	SVA60●●● SVA61●●● SVA62●●●
300	None 400 400	— 600 250	SXG60●●● SXG61●●● SXG62●●●	SXW60●●● SXW61●●● SXW62●●●	SXA60●●● SXA61●●● SXA62●●●
Mechanically Held*[24]*					
30	None 30 30	— 600 250	SMG70●●● SMG71●●● SMG72●●●	SMW70●●● SMW71●●● SMW72●●●	SMA70●●● SMA71●●● SMA72●●●
60	None 60 60	— 600 250	SPG70●●● SPG71●●● SPG72●●●	SPW70●●● SPW71●●● SPW72●●●	SPA70●●● SPA71●●● SPA72●●●
100	None 100 100	— 600 250	SQG70●●● SQG71●●● SQG72●●●	SQW70●●● SQW71●●● SQW72●●●	SQA70●●● SQA71●●● SQA72●●●
200	None 200 200	— 600 250	SVG70●●● SVG71●●● SVG72●●●	SVW70●●● SVW71●●● SVW72●●●	SVA70●●● SVA71●●● SVA72●●●
300	None 400 400	— 600 250	SXG70●●● SXG71●●● SXG72●●●	SXW70●●● SXW71●●● SXW72●●●	SXA70●●● SXA71●●● SXA72●●●

Table 16.211: Coil Voltage Codes *[24]*

Voltage		Code
60 Hz	50 Hz	
24 *[25]*	—	V01
120	110	V02
208	—	V08
240	220	V03
277	—	V04
480	440	V06
Specify	Specify	V99

Table 16.212: Circuit Breaker—3-Pole, 50–60 Hz (replace ●●● with the voltage code)

Contactor Ampere Rating	Circuit Breaker		NEMA 1 General Purpose Enclosure	NEMA 4 & 4X*[21]* Watertight and Dusttight Enclosure Stainless Steel (30-300 A)	NEMA 12/3R*[22]* Dusttight, Oiltight, Driptight, Industrial Use Enclosure
	Ampere Rating	Maximum Volts	Type *[23]*	Type *[23]*	Type *[23]*
Electrically Held*[24]*					
30	30	600	SMG81●●●	SMW81	SMA81●●●
60	60	600	SPG81●●●	SPW81●●●	SPA81●●●
100	100	600	SQG81●●●	SQW81●●●	SQA81●●●
200	200	600	SVG81●●●	SVW81●●●	SVA81●●●
300	300	600	SXG81●●●	SXW81●●●	SXA81●●●
400	400	600	SYG81●●●	SYW81●●●	SYA81●●●
600	600	600	SZG81●●●	SZW81●●●	SZA81●●●
Mechanically Held*[24]*					
30	30	600	SMG91●●●	SMW91●●●	SMA91●●●
60	60	600	SPG91●●●	SPW91●●●	SPA91●●●
100	100	600	SQG91●●●	SQW91●●●	SQA91●●●
200	200	600	SVG91●●●	SVW91●●●	SVA91●●●
300	300	600	SXG91●●●	SXW91●●●	SXA91●●●
400	400	600	SYG91●●●	SYW91●●●	SYA91●●●
600	600	600	SZG91●●●	SZW91●●●	SZA91●●●

For How to Order Information, see page page 16-28.

[21] For **NEMA 4 and 4X** watertight, dusttight ,and corrosion-resistant glass-polyester enclosures, add **Form G18** (limited to 100 A max.). 400 and 600 A enclosures are painted sheet steel **(NEMA Type 4 & 4X).**
[22] NEMA 12 enclosures can be field modified for outdoor non-corrosive and non–service entrance rated applications. See page 16-112 for more information.
[23] Replace the three bullets (●●●) in the catalog number with the coil voltage code. Refer to the standard voltage codes shown in Table 16.207.
[24] The control/coil voltage must be specified.
[25] 24 V coils are not available for 200 A or larger devices. Contact the Customer Care Center for additional information.

© 2019 Schneider Electric
All Rights Reserved
11/20/2019

Courtesy of Steven Engineering, Inc - (800) 258-9200 - sales@steveneng.com - www.stevenengineering.com

NIGHT-MASTER®

Long Version

Short Version

UL Approved for
Service Entrance

File E16151
CCN NRNT

Night-Master Combination Lighting Contactors

The Class 8903 Night-Master Outdoor Combination Lighting Contactor is the only product on the market that is UL Listed for Service Entrance. This allows the contactor to be pole mounted when used to control lighting in remote locations such as parks, monuments, group sports facilities, and streets and highways.

Factory modifications such as photocells, time switches, key operated selector switches, and the combination of photocells and time switches (photocell on, time switch off) allow the Night-Master to be located in applications where manual operation of lights is not practical.

Night-Master comes in long and short versions in sizes 30 through 200 Amperes. Most common modifications can be provided from the factory, or added in the field to the pre-drilled and pre-tapped panels.

NIGHT-MASTER Outdoor Combination Lighting Contactors offer a disconnecting means, overcurrent protection, and a lighting contactor in one NEMA 3R Rainproof enclosure. These combination units satisfy the requirements of the National Electrical Code and UL 508 for service entrance equipment.

Features

- Solid neutral standard
- Grounding lug standard
- Padlocking provisions
- Short and long versions available
- Electrically held Type S lighting contactor
- Eliminates the need for separate mounted safety switches
- Additional panel space eliminates the need for external mounting of time clocks
- Separate control comes standard on all lighting contactors

NOTE: If a holding circuit contact is required for proper operation, order an additional contact.

Table 16.213: Disconnect Switch Type—3-Pole (replace ●●● with the voltage code)

Contactor Ampere Rating	Fuse Clip Size (A)	Fuse Clip Spacing (V)	Short Version		Long Version	
			Class 8903 Type 3R *[26]*	Class 8903 Type 3R Stainless Steel *[26]*	Class 8903 Type 3R *[26]*	Class 8903 Type 3R Stainless Steel *[26]*
30	30 30	600 250	SMC61●●● SMC62●●●	SMH61●●● SMH62●●●	SMC63●●● SMC64●●●	SMH63●●● SMH64●●●
60	60 60	600 250	SPC61●●● SPC62●●●	SPH61●●● SPH62●●●	SPC63●●● SPC64●●●	SPH63●●● SPH64●●●
100	100 100	600 250	SQC61●●● SQC62●●●	SQH61●●● SQH62●●●	SQC63●●● SQC64●●●	SQH63●●● SQH64●●●
200	200 200	600 250	SVC61●●● SVC62●●●	SVH61●●● SVH62●●●	SVC63●●● SVC64●●●	SVH63●●● SVH64●●●

Table 16.214: Coil Voltage Codes

Voltage		Code
60 Hz	50 Hz	
24 *[27]*	—	V01
120	110	V02
208	—	V08
240	220	V03
277	—	V04
480	440	V06
Specify	Specify	V99

Table 16.215: Circuit Breaker Type—3-Pole (replace ●●● with the voltage code)

Contactor Ampere Rating	Circuit Breaker		Short Version		Long Version	
	Ampere Rating	Maximum Volts	Class 8903 Type 3R *[26]*	Class 8903 Type 3R Stainless Steel *[26]*	Class 8903 Type 3R *[26]*	Class 8903 Type 3R Stainless Steel *[26]*
30	30	600	SMC81●●●	SMH81●●●	SMC83●●●	SMH83●●●
60	60	600	SPC81●●●	SPH81●●●	SPC83●●●	SPH83●●●
100	100	600	SQC81●●●	SQH81●●●	SQC83●●●	SQH83●●●
200	200	600	SVC81●●●	SVH81●●●	SVC83●●●	SVH83●●●

For How to Order Information, see page 16-28.

[26] Replace the three bullets (●●●) in the catalog number with the coil voltage code. Refer to the standard voltage codes listed in Table 16.214.
[27] 24 V coils are not available for 200 A devices. Contact your local sales office for additional information.

© 2019 Schneider Electric
All Rights Reserved
11/20/2019

Courtesy of Steven Engineering, Inc - (800) 258-9200 - sales@steveneng.com - www.stevenengineering.com

Factory Modifications (Forms)

NOTE: If a UL label is required, consult the Customer Care Center at 1-888-778-2733. Some Forms **are not** UL Listed.

Standard Equipment dimensions and enclosure construction may not apply when certain special features are added. Such cases should be referred to the factory with a complete description when precise dimensions are required.

Table 16.216: Lighting Contactor Forms (Factory Modifications)

Description	Form Letter	NEMA Enclosure Type	Used On: Std. Elec. Held	Used On: Std. Mech. Held	Used On: Combo Elec. Held	Used On: Combo Mech. Held	Used On: Night-Master 30–200 A	Rating (A): 30 Type L	Rating (A): 30	Rating (A): 60	Rating (A): 100	Rating (A): 200	Rating (A): 300	Rating (A): 400, 600, 800
On-Off push button(momentary contact)	A3	1	—	Y	—	Y	—	Y	Y	Y	Y	Y	Y	Y
	A3	3R, 4, 12	—	Y	—	Y	—	Y	Y	Y	Y	Y	Y	Y
On-Off push button (with holding circuit interlock)	A12	Any	Y	—	Y	—	Y	Y	Y	Y	Y	Y	Y	Y
Hand-Off-Auto selector switch. To substitute a key operated selector switch, use Form C33 and specify positions, legend marking, and key removal. This form must be used with another selector switch form (example: CC33).	C	1	Y	Y [28]	Y	Y [28]	—	Y	Y	Y	Y	Y	Y	Y
	C	3R, 4, 12	Y	Y [28]	Y	Y [28]	Y	Y	Y	Y	Y	Y	Y	Y
On-Off selector switch. To substitute a key operated selector switch, use Form C33 and specify positions, legend marking, and key removal. This form must be used with another selector switch form (example: C33C6).	C6	1	Y	Y	Y	Y	—	Y	Y	Y	Y	Y	Y	Y
	C6	3R, 4, 12	Y	Y	Y	Y	Y	Y	Y	Y	Y	Y	Y	Y
Control circuit fuse (1 fuse)	F	Any	Y	Y	Y	Y	Y	Y	Y	Y	Y	Y	Y	Y
Control circuit fuses (2 fuses)	F4	Any	Y	Y	Y	Y	Y	Y	Y	Y	Y	Y	Y	Y
Control circuit transformer standard capacity 50/60 Hz														
Primary Fuses / Secondary Fuses / Transformer capacity														
2 [29] / 0 / Std.	F4T	1, 4, 12	Y	Y	Y	Y	Y	Y	Y	Y	Y	Y	Y [30]	Y [31]
2 / 1 / Std.	FF4T	1, 4, 12	Y	Y	Y	Y	Y	Y	Y	Y	Y	Y	Y [30]	Y [31]
2 / 1 / 100 VA Additional	FF4T11	1, 4, 12	Y	Y	Y	Y	Y	Y	Y	Y	Y	Y [30]	Y [30]	Y [31]
2 / 1 / 200 VA Additional	FF4T12	1, 4, 12	Y	Y	Y	Y	Y	Y[30]	Y	Y	Y [30]	Y [30]	Y [30]	Y [31]
2 / 1 / 300 VA Additional	FF4T13	1, 4, 12	Y	Y	Y	Y	Y	Y	Y [30]	Y [30]	Y [30]	Y [30]	Y [30]	Y [31]
Noise reduced enclosure and shock mounted panel	G4	Any	—	Y	—	—	—	Y	Y	Y	Y	Y	Y	Y
Addition of photoelectric receptacle	G10	1 [32], 3R, 12	Y	—	Y	—	Y	Y	Y	Y	Y	Y	Y	Y
Addition of photoelectric receptacle with photo-cell	G101	1 [32], 3R, 12	Y	—	Y	—	Y	Y	Y	Y	Y	Y	Y	Y
Addition of photoelectric receptacle and relay (R6)[33]	G10R6	1 [32], 12	—	Y	—	Y	—	Y	Y	Y	Y	Y	Y	Y
With photo-cell installed [33]	G101R6	1 [32], 12	—	Y	—	Y	—	Y	Y	Y	Y	Y	Y	Y
Addition of terminal blocks (other than standard). The designation *xx* represents the number of terminals needed. Available in multiples of 5 only.														
Wired	G56xx	Any	Y	Y	Y	Y	Y	Y	Y	Y	Y	Y	Y	Y
Unwired	G50xx	Any	Y	Y	Y	Y	Y	Y	Y	Y	Y	Y	Y	Y
Addition of 24 hour time clock (120–277 V only)	K14	1, 4, 12	Y	Y	Y	Y	—	Y	Y	Y	Y	Y	Y	Y
Addition of 24 hour time clock w/day omission (120–277 V)	K141	1, 4, 12	Y	Y	Y	Y	—	Y	Y	Y	Y	Y	Y	Y
Addition of 7 day time clock (120–277 V)	K142	1, 4, 12	Y	Y	Y	Y	—	Y	Y	Y	Y	Y	Y	Y
Addition of 24 hour time clock (120–277 V only)	K14	3R	—	—	—	—	Y	—	Y	Y	Y	Y	—	—
Addition of 24 hr time clock w/skip day (120–277 V)	K141	3R	—	—	—	—	Y	—	Y	Y	Y	Y	—	—
Addition of 7 day time clock (120–277 V)	K142	3R	—	—	—	—	Y	—	Y	Y	Y	Y	—	—
Addition of solid neutral terminal block	N	1, 4, 12	Y	Y	Y	Y	Std.	Y	Y	Y	Y	Y	Y	Y
Red pilot light	P1	Any	Y	Y	Y	Y	Y	Y	Y	Y	Y	Y	Y	Y
Two or more lights [34] (each)	P	Any	Y	Y	Y	Y	Y	Y	Y	Y	Y	Y	Y	Y
Red push-to-test pilot light	P21	Any	Y	Y	Y	Y	Y	Y	Y	Y	Y	Y	Y	Y
Interlock necessary for pilot light one needed for each additional pilot light	[35]	Any	Y	Y	Y	Y	Y	[36]	Y	Y	Y	Y	Y	Y
Two-wire interface for mechanically held [33]	R6	Any	—	Y	—	Y	—	Y	Y	Y	Y	Y	Y	Y
Addition of undervoltage and overvoltage relay	R46	Any	Y	Y	Y	Y	Y	Y	Y	Y	Y	Y	Y	Y
Three wire control for long distance applications[33]	R62	Any	—	Y	—	Y	—	Y	Y	Y	Y	Y	Y	Y
Auxiliary contacts (specify number of N.O. + N.C.)	X	Any	Y	Y	Y	Y	Y	[36]	Y	Y	Y	Y	Y	Y
Auxiliary electrical interlock installed on disconnect switch or circuit breaker operating mechanism	Y74	Any	—	—	Y	Y	Y	—	Y	Y	Y	Y	Y	Y
Coil transient suppressor (120 Vac only)	Y145	Any	Y	Y	Y	Y	Y	Y	Y	Y	Y	Y	—	—
Addition of lightning arrestor	Y1532	Any	Y	Y	Y	Y	Y	Y	Y	Y	Y	Y	Y	Y
Substitute copper only lugs for standard	Y157	Any	Y	Y	Y	Y	Y	—	—	Y	Y	Y	Y	Y

[28] When ordering **Form C** on mechanically held devices, you must also include**Form R6**.
[29] Transformer voltage codes.
[30] Single primary voltage must be specified using the codes shown in Table 16.217.
[31] Mechanically held only. Electrically held device has a control circuit requiring a 120 V secondary, therefore, a transformer is supplied. The transformer comes wired to L1 and L2 unless **Form S** is called for. It is supplied with two primary and one secondary fuse.
[32] Photocell mounted on a NEMA 1 enclosure is designed for indoor areas which rely on natural light. Addition of the photocell does not make the enclosure suitable for outdoor (NEMA Type 3R) installations.
[33] Available for 24 V, 120 V, 240 V, 277 V and 480 V applications only.
[34] For electrically held enclosed devices, the first pilot is wired in parallel with the coil. Operating interlocks are required for all additional pilot lights. Mechanically held devices require operating interlocks for all pilot lights.
[35] **Do not** use Form X for any interlock wired in series with a pilot light, but **do** specify how the pilot light and interlock are to be wired into the circuit.
[36] Electrically held 20 A multipole contactors cannot add interlocks. Additional poles can be used for the same function, however. Mechanically held (Type LX) provide one double throw auxiliary (or status) contact as standard.

© 2019 Schneider Electric
All Rights Reserved

Courtesy of Steven Engineering, Inc - (800) 258-9200 - sales@steveneng.com - www.stevenengineering.com

Table 16.217: Voltage Codes

Voltage at 60 Hz (primary–secondary)	Code
120–24	V89
208–120	V84
240–24	V82
240–120	V80
277–120	V85
480–24	V83
480–120	V81
480–240	V87
600–120	V86

Order Example

You have device 8903SMG2V02. V02 means that you need a coil voltage of 120-60/110-50, wired for separate control.
You want to add Form FF4T, with transformer voltages of 480 V primary, 120 V secondary. The new and complete Class, Type, Voltage Code and Form number are:

Class	Type	Voltage Code	Form *[37]*
8903	SMG2	V81	FF4T

Table 16.218: Lighting Contactor Field Modifications

Description	Types L & LX	Type S						Form No.
	30 A	30 A	60 A	100 A	200 A	300 A	400, 600, 800 A	
	Kit	Kit	Kit	Kit	Kit	Kit	Kit	
Auxiliary Contacts								
1 N.O. LH or RH Mounting	—	9999SX6	9999SX6	9999SX6	9999SX6	9999SX6	9999SX6	X
1 N.C. LH or RH Mounting	—	9999SX7	9999SX7	9999SX7	9999SX7	9999SX7	9999SX7	
1 N.C. & 1 N.O. Isolated LH or RH	—	9999SX8	9999SX8	9999SX8	9999SX8	9999SX8	9999SX8	
1 N.O. Overlapping LH or RH	—	9999SX9	9999SX9	9999SX9	9999SX9	9999SX9	9999SX9	
1 N.C. Overlapping LH or RH	—	9999SX10	9999SX10	9999SX10	9999SX10	9999SX10	9999SX10	
Control Circuit Fuse Holder								
Single Fuse Unit	9999LLX and 9999SFR3	9999SFR3	9999SFR3	9999SFR3	9999SFR3	9999SFR3	9999SFR3	F
Two Fuse Unit	9999LLX and 9999SFR4	9999SFR4	9999SFR4	9999SFR4	9999SFR4	9999SFR4	9999SFR4	F4
Transformers	9070TF50	9070TF100	9070TF100	9070TF150	9070TF300	9070TF500	9070TF750	T
Oversized Enclosures (Non-Combo)								
NEMA 1	9991SDG3	9991SDG3	9991SDG3	—	—	—	—	—
NEMA 4	9991SDW3	9991SDW3	9991SDW3	—	—	—	—	—
NEMA 12	9991SDA3	9991SDA3	9991SDA3	—	—	—	—	—
Standard Enclosures								
NEMA 1–Surface Mount	9991LXG1	9991SCG7 *[38]*	9991SDG7 *[38]*	9991SFG8	9991SFG4	9991SGG8	—	—
NEMA 3R	9991SDH1	9991SCH2	9991SDH1	9991SEH1	9991SFH1	—	—	—
NEMA 4–Standard	9991SDW1	9991SCW1	9991SDW1	—	—	—	—	—
NEMA 4–With 2 Cvr Mtd. Clsng Plts	9991SDW11	9991SCW11	9991SDW11	9991SEW11	—	—	—	—
NEMA 4X–Glass Polyester	9991SDW20	9991SCW20	9991SDW20	—	—	—	—	—
NEMA 12	9991SDA11	9991SCA11	9991SDA11	9991SEA11	—	—	—	—
NEMA 1–Flushmount–Complete	—	—	—	9991SEF11	—	—	—	—
NEMA 1–Flush Mount Parts	—	—	—	—	—	—	—	—
FLUSH PARTS	—	—	—	—	—	—	—	—
Standard–Elec. held	9991SDF13	9991SCF11	9991SDF11	—	—	—	—	—
Standard–Mech. held	9991SDF13	9991SCF13	9991SDF13	—	—	—	—	—
Mounting Strap	9991SDF2	9991SCF2	9991SDF2	—	—	—	—	—
Pull Box	9991SDF1	9991SCF1	9991SDF1	—	—	—	—	—
Internal Operator Mounting Bracket	3010215901	3010215901	3010215901	3010215901	3010215901	3010215901	3010215901	G53
Solid Neutral	9999SN1	9999SN1	9999SN1	9999SN1	9999SN2	9999SN2	9999SN3 *[39]*	N
Combination Lighting Contactor Disconnect Interlock Kit								
Breaker Type								
1-Pole	—	9999R26	9999R26	9999R26	9999R26	9999R26	9999R26	
2-Pole	—	9999R27	9999R27	9999R27	9999R27	9999R27	9999R27	
Disconnect Type								
1-Pole	—	9999TC11	9999TC10	9999TC10	9999R8	9999R35	9999R26	Y74
2-Pole	—	9999TC21	9999TC20	9999TC20	9999R9	9999R36	9999R27	
Lightning Arrestor								
175 Vac to Ground Max 2 or 3 wire Grounded	SDSA1175	SDSA1175	SDSA1175	SDSA1175	SDSA1175	SDSA1175	SDSA1175	Y1532
650 Vac to Ground Max 3 or 4 wire Grounded	SDSA3650	SDSA3650	SDSA3650	SDSA3650	SDSA3650	SDSA3650	SDSA3650	

[37] Form numbers should always be shown in alphabetical order.
[38] For electrically held only.
[39] Limited to 400 and 600 A versions. 800 A is a factory modification only.

© 2019 Schneider Electric
All Rights Reserved
11/20/2019

Courtesy of Steven Engineering, Inc - (800) 258-9200 - sales@steveneng.com - www.stevenengineering.com

Cover Mounted Control Units

Table 16.219: Mechanically Held

Description	Form No.	TYPE LX	TYPE S					
		30 A	30 A	60 A	100 A	200 A	300 A	400, 600, 800 A
		Kit	Kit	Kit	Kit	Kit	Kit	Kit
Push Button (On-Off) NEMA 1 Enclosure	A3	9999BLX 9999LXPB	*[40]*	9001KA2 9999SA3 *[41]*	9001KA2 9999SA3 *[41]*	9001KA2 9999SA3 *[41]*	9001KA2 9999SA3 *[41]*	9001KA2 9999SA3 *[41]*
NEMA 3R, 4 or 12 Enclosure		9001KA2 9999SA3 *[41]*	9001KA2 9999SA3 *[41]*	9001KA2 9999SA3 *[41]*	9001KA2 9999SA3 *[41]*	9001KA2 9999SA3 *[41]*	9001KA2 9999SA3 *[41]*	9001KA2 9999SA3 *[41]*
Selector Switch (2 Position) NEMA 1 Enclosure	C6	9999BLX 9999LXS	9001KN244 9001KS11BH1	9001KN244 9001KS11BH1	9001KN244 9001KS11BH1	9001KN244 9001KS11BH1	9001KN244 9001KS11BH1	9001KN244 9001KS11BH1
NEMA 3R, 4 or 12 Enclosure		9001KN244 9001KS11BH1	9001KN244 9001KS11BH1	9001KN244 9001KS11BH1	9001KN244 9001KS11BH1	9001KN244 9001KS11BH1	9001KN244 9001KS11BH1	9001KN244 9001KS11BH1
Selector Switch (3 Position) NEMA 1 Enclosure (must include two wire control relay, Form R6	C	9999BLX 9999SC2	9001KN260 9001KS46BH2	9001KN260 9001KS46BH2	9001KN260 9001KS46BH2	9001KN260 9001KS46BH2	9001KN260 9001KS46BH2	9001KN260 9001KS46BH2
NEMA 3R, 4 or 12 Enclosure		9001KN260 9001KS46BH2						
Two Wire Control Relay (Form R6) *[42]*	R6	9999RLX CA2SK11 *[43]*	8501XO11	8501XO11	8501XO11	8501XO11	8501XO11	8501XO11

Table 16.220: Electrically Held

Description	Form No.	TYPE L	TYPE S					
		30 A	30 A	60 A	100 A	200 A	300 A	400, 600, 800 A
		Kit	Kit	Kit	Kit	Kit	Kit	Kit
Pilot Lights (Red and Green) NEMA 1 Enclosure NEMA 3R, 4 or 12 Enclosure	P1	9999SP28R	9999SP2R 9999SP28R	9999SP3R 9999SP28R	*[44]* 9999SP14R 9999SP28R	*[45]* 9999SP28R 9999SP28R	*[45]* 9999SP28R 9999SP28R	9999SP28R 9999SP28R
Push Buttons *[46]* NEMA 1 Enclosure	A12	9999BLX 9999SA10	9999SA10	9999SA10	9999SA3	9999SA3	9999SA3	9999SA3
NEMA 3R, 4 or 12 Enclosure		9999SA3	9999SA3	9999SA3	9999SA3	9999SA3	9999SA3	9999SA3
Selector Switch (2 Position) NEMA 1 Enclosure	C6	9999BLX 9999SC22	9999SC22	9999SC22	9999SC22	9001KN244 9001KS11BH1	9001KN244 9001KS11BH1	9001KN244 9001KS11BH1
NEMA 3R, 4 or 12 Enclosure		9001KN244 9001KS11BH1	9001KN244 9001KS11BH1	9001KN244 9001KS11BM1	9001KN244 9001KS11BH1	9001KN244 9001KS11BH1	9001KN244 9001KS11BH1	9001KN244 9001KS11BH1
Selector Switch (3 Position) NEMA 1 Enclosure	C	9999BLX 9999SC2	9999SC2	9999SC2	9999SC2	9999SC8	9999SC8	9999SC8
NEMA 3R, 4 or 12 Enclosure		9999SC8	9999SC8	9999SC8	9999SC8	9999SC8	9999SC8	9999SC8

[40] No field installed kit available.
[41] Mechanically held contactors need two distinct signals to operate. An N.O. contact block must be added to the Class 9999 Type SA3 push button kit.
[42] Form R6 available for 24 V, 120 V, 240 V and 277 V only.
[43] Insert CA2SK11( ) voltage code from page 23-21.
[44] 2- or 3-pole only. For 4- or 5-pole use Class 9999SP15R.
[45] The coil voltage must be the same as the pilot light rating. Kit contains one (1) Class 9001, Type KP1R6 120 V/60 Hz red pilot light control unit. For other voltages, refer to the Class 9001, Type KP Control Section.
[46] Requires holding circuit interlock for Type S or additional power pole on Type L devices.

© 2019 Schneider Electric
All Rights Reserved
11/20/2019

Courtesy of Steven Engineering, Inc - (800) 258-9200 - sales@steveneng.com - www.stevenengineering.com

Open Type

Table 16.221: Open Type

Electrically Held								Mechanically Held						
Rating (A)	Type	No. of Poles	Dimensions					Type	Dimensions					
			A	B	C	E			A	B	C	D	E	F
30	LO	2–4	**2.88** 73	**5** 127	**4.62** 117	**3.12** 79		LXO	**2.88** 73	—	—	**8.81** 224	**3.25** 83	**7.70** 196
		6	**4.25** 108	**5** 127	**4.62** 117	**3.12** 79			**4.25** 108	—	—	**8.81** 224	**3.25** 83	**7.70** 196
		8–12	**5.63** 143	**5** 127	**4.62** 117	**3.12** 79			**5.63** 143	—	—	**8.81** 224	**3.25** 83	**7.70** 196
30	SMO	2–3	**4.34** 110	**3.22** 82	**4.22** 107	**3.50** 89		—	**7.15** 182	**3.79** 96	**4.68** 119	—	**6.04** 153	—
		4–5	**4.34** 110	**4.25** 108	**4.22** 107	**3.50** 89		—	**7.15** 182	**4.54** 115	**4.68** 119	—	**6.04** 153	—
60	SPO	2–3	**5.33** 135	**4.31** 110	**4.94** 125	**5.50** 140		—	**8.25** 210	**4.61** 117	**5.23** 133	—	**7.81** 198	—
		4–5	**6.22** 158	**5.61** 142	**4.94** 125	**5.50** 140		—	**8.70** 221	**5.90** 150	**5.23** 133	—	**7.81** 198	—
100	SQO	2–3	**7.09** 180	**5.45** 138	**6.50** 165	**7.26** 184		—	**10.13** 257	**5.94** 151	**6.72** 171	—	**7.26** 184	—
		4–5	**7.82** 199	**9.75** 248	**6.50** 165	**7.26** 184		—	**10.56** 268	**9.75** 248	**6.72** 171	—	**7.26** 184	—
200	SVO	2–3	**9.14** 232	**6.00** 152	**6.50** 165	**9.14** 232		SVO	**11.35** 288	**6.00** 152	**6.72** 171	—	**9.14** 232	—
		4, 5*[47]*	**9.14** 232	**9.75** 248	**6.50** 165	**9.14** 232			**11.55** 293	**9.75** 248	**6.72** 171	—	**9.14** 232	—
300	SXO	2–3	**12.31** 313	**8.66** 220	**8.74** 222	**12.25** 311		SXO	**12.31** 313	**8.66** 220	**10.50** 267	—	**12.31** 313	—
400	SYO	2–3	—	**12.33** 313	**9.00** 229	**27.78** 706		SYO	—	**8.66** 220	**10.50** 267	—	**21.00** 533	—
600	SZO							SZO						
800	SJO	2–3	—	**12.33** 313	**11.94** 303	**42.70** 1085		—	—	—	—	—	—	—

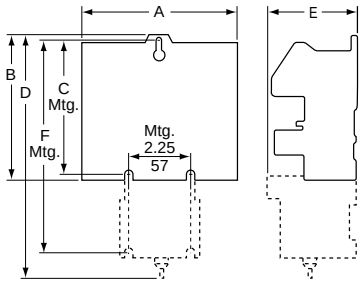

Open Type L and LX

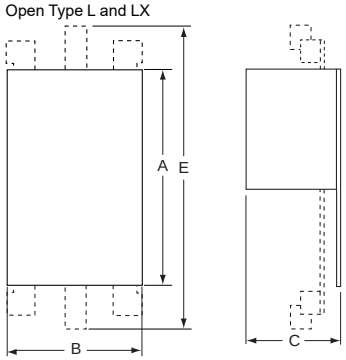

Open Type S

NOTE: These dimensions are for reference only. If you need precise measurements, contact the Customer Care Center at 1-888-778-2733.

[47] 5-Pole, electrically held only.

© 2019 Schneider Electric
All Rights Reserved
11/20/2019

Courtesy of Steven Engineering, Inc - (800) 258-9200 - sales@steveneng.com - www.stevenengineering.com

NEMA 1

Table 16.222: NEMA 1 Non-Combination Lighting Contactors, Electrically Held (EH) and Mechanically Held (MH)

Rat-ing (A)	Type	No. of Poles	Form(s)		Fig.	Dimensions, in. (mm)											
						A	B	C	D	E	F	G	H	I	J	K	L
30	LG, LXG	Any	Standard, A3, A12, C, C6, F, P, R6, Y48		A	**7.81** (198)	**12.69** (322)	**6.03** (153)	—	**1.09** (28)	**10.50** (267)	**1.09** (28)	**1.09** (28)	**5.63** (143)	**5.75** (146)	**1.09** (28)	**5.63** (143)
			P, T		B	**11.88** (302)	**11.88** (302)	**7.44** (189)	**9.75** (248)	**1.06** (27)	**1.06** (27)	**9.75** (248)	**1.06** (27)	**1.06** (27)	**0.31** (8)	—	—
			K14, K141, K142		A	**16.00** (406)	**22.00** (559)	**7.38** (188)	**8.00** (203)	**1.00** (25)	**20.00** (508)	**1.00** (25)	**1.00** (25)	**14.00** (356)	**7.38** (188)	**1.00** (25)	**7.00** (178)
30	SMG	2-5	EH	Standard, A12, C, C6, P, X	A	**6.00** (152)	**10.00** (254)	**5.28** (134)	**3.00** (76)	**0.88** (22)	**8.13** (206)	**1.00** (25)	**0.94** (24)	**4.13** (105)	**5.00** (127)	—	—
			MH	Standard, X													
			EH	T	A	**6.34** (161)	**15.88** (403)	**5.19** (132)	**14.38** (365)	**4.66** (118)	**0.28** (7)	**0.75** (19)	**0.84** (21)	—	—	—	—
				N	B	**14.88** (378)	**14.12** (359)	**7.56** (192)	**12.75** (324)	**1.06** (27)	**1.06** (27)	**12.00** (305)	**1.06** (27)	**1.06** (27)	**0.31** (8)	—	—
			MH	T, N, R6													
				A3, C, C6, P	B	**8.12** (206)	**14.12** (359)	**9.73** (247)	**6.00** (152)	**1.06** (27)	**1.06** (27)	**12.00** (305)	**1.06** (27)	**1.06** (27)	**0.31** (8)	—	—
60	SPG	2-3	EH	Standard, A12, C, C6, P, X	A	**7.81** (198)	**12.69** (322)	**6.03** 153)	—	**1.09** (28)	**10.50** (267)	**1.09** (28)	**1.09** (28)	**5.63** (143)	**5.75** (146)	**1.09** (28)	**5.63** (143)
		4-5	EH	Standard, A12, C, C6, P, X	B	**8.12** (206)	**14.12** (359)	**9.73** (247)	**6.00** (152)	**1.06** (27)	**1.06** (27)	**12.00** (305)	**1.06** (27)	**1.06** (27)	**0.31** (8)	—	—
		2-5	EH, MH	T, N, R6	B	**14.88** (378)	**14.12** (359)	**7.56** (192)	**12.75** (324)	**1.06** (27)	**1.06** (27)	**12.00** (305)	**1.06** (27)	**1.06** (27)	**0.31** (8)	—	—
		2-5	MH	Standard, A3, C, C6, P, X	B	**8.12** (206)	**14.12** (359)	**9.73** (247)	**6.00** (152)	**1.06** (27)	**1.06** (27)	**12.00** (305)	**1.06** (27)	**1.06** (27)	**0.31** (8)	—	—
100	SQG	2, 3 *[48]*	EH	Standard, A12, C, C6, F, P, X, T	B	**11.25** (286)	**25.15** (639)	**8.99** (288)	**8.60** (218)	**1.25** (32)	**1.25** (32)	**22.32** (567)	**1.42** (36)	**1.42** (36)	**0.44** (11)	—	—
			MH	Standard, F, X, T													
		2, 3	EH	N, R6, T, T10-T13 *[49]*	B	**18.15** (461)	**29.15** (740)	**9.24** (234)	**15.50** (394)	**9.24** (234)	**1.33** (34)	**26.50** (673)	**1.33** (34)	**1.33** (34)	**0.44** (11)	—	—
			MH	A3, C, C6, N, R6, T, T10-T13 *[49]*													
		4, 5	EH	Standard, A12, C, C6, F, P, X	B	**11.25** (286)	**25.15** (639)	**8.99** (288)	**8.60** (218)	**1.25** (32)	**1.25** (32)	**22.32** (567)	**1.42** (36)	**1.42** (36)	**0.44** (11)	—	—
			MH	Standard, F, X													
			EH	*[49]*	B	**18.15** (461)	**29.15** (740)	**9.24** (234)	**15.50** (394)	**9.24** (234)	**1.33** (34)	**26.50** (673)	**1.33** (34)	**1.33** (34)	**0.44** (11)	—	—
			MH	A3, C, C6 *[49]*													
			EH, MH	N, R6, T, T10-T13	B	**22.15** (563)	**39.15** (994)	**10.24** (260)	**19.50** (495)	**1.33** (34)	**1.33** (34)	**36.50** (927)	**1.33** (34)	**1.33** (34)	**0.44** (11)	—	—
200	SVG	All	EH, MH	Standard and All Forms	B	**22.15** (563)	**39.15** (994)	**10.24** (260)	**19.50** (495)	**1.33** (34)	**1.33** (34)	**36.50** (927)	**1.33** (34)	**1.33** (34)	**0.44** (11)	—	—
300	SXG	All	EH, MH	Standard and All Forms	B	**17.21** (437)	**44.21** (1123)	**12.83** (325)	**13.00** (330)	**2.11** (54)	**2.11** (54)	**40.00** (1016)	**2.11** (54)	**2.11** (54)	**0.56** (14)	—	—
400, 600	SYG, SZG	All	EH, MH	Standard and All Forms	B	**20.21** (513)	**65.75** (1670)	**13.10** (333)	**11.00** (972)	**4.61** (117)	**4.61** (117)	**64.50** (1638)	**0.63** (16)	**0.63** (16)	**0.69** (18)	—	—
800	SJG	2-3	With or Without Any Forms		C	**34.50** (876)	**93.00** (2362)	**23.50** (597)	Floor Mounting								

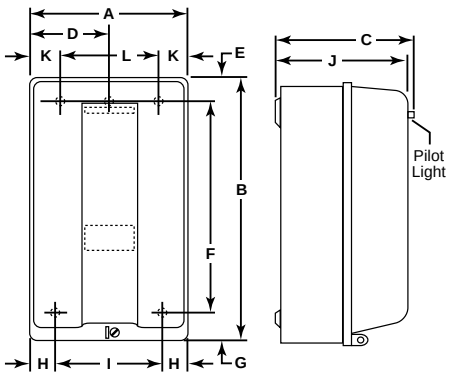

Figure A

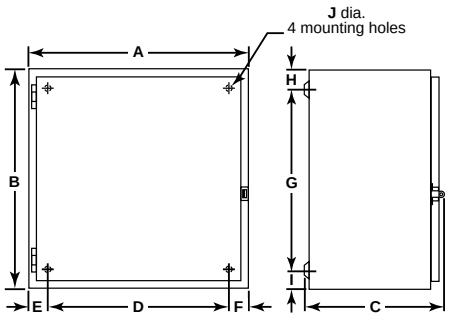

Figure B

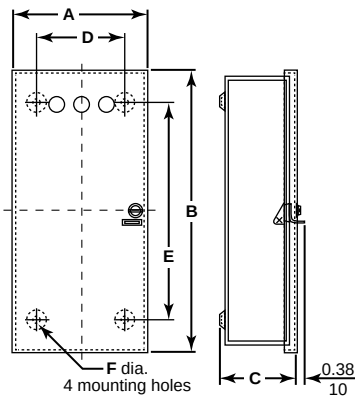

Figure C

[48] Factory transformer only.
[49] All Type K Forms.

© 2019 Schneider Electric
All Rights Reserved
11/20/2019

Courtesy of Steven Engineering, Inc - (800) 258-9200 - sales@steveneng.com - www.stevenengineering.com

NEMA 1 Flush Mounting

Table 16.223: NEMA 1 Flush Mounted Enclosures

Rating (A)	Type	Form(s)		Dimensions						
				A	B	C	D	E	F	G
30	LF	Standard, F, Y48, R6		**15.19** 386	**8.94** 227	**7.63** 194	**12.88** 327	**5.44** 138	**10.94** 278	**5.13** 130
	LXF	A3, A12, C, C6, T, P		**24.00** 610	**17.50** 445	**15.00** 381	**19.25** 489	**7.12** 181	—	—
30	SMF	EH	Std., A12, C, C6, P, X	**13.44** 341	**7.19** 183	**5.88** 149	**11.13** 283	**4.75** 121	**9.19** 233	**4.50** 114
		MH	Std., X							
		EH	T, N	**24.00** 610	**17.50** 445	**15.00** 381	**19.25** 489	**5.75** 146	—	—
		MH	A3, C, C6, T, N, P, R6							
60	SPF	EH	Std., A12, C, C6, P, X	**15.19** 386	**8.94** 227	**7.63** 194	**12.88** 327	**5.44** 138	**10.94** 278	**5.13** 130
		MH	Std., X							
		EH	T, N	**24.00** 610	**17.50** 445	**15.00** 381	**19.25** 489	**5.75** 146	—	—
		MH	A3, C, C6, T, N, P, R6							
100	SQF	With or without any Forms		**31.00** 787	**16.75** 425	**14.25** 362	**26.25** 667	**8.00** 203	—	—

EH = Electrically Held. MH = Mechanically Held.

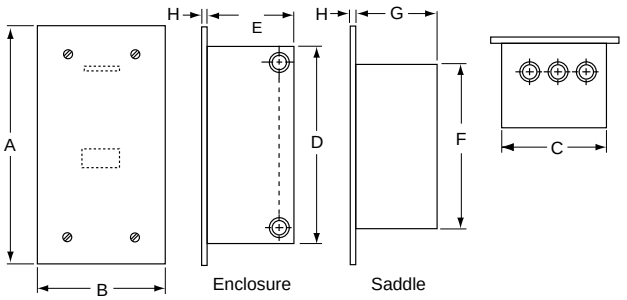

Figure 16.19: NEMA 1 Flush Mounted

Dimensions: **in.** mm

© 2019 Schneider Electric
All Rights Reserved
11/20/2019

Courtesy of Steven Engineering, Inc - (800) 258-9200 - sales@steveneng.com - www.stevenengineering.com

NEMA 3R, 4, and 4X

NOTE: These dimensions are for reference only. If you need precise measurements, contact the Customer Care Center at 1-888-778-2733.

Table 16.224: NEMA 3R Enclosures

Rating (A)	Type	No. of Poles	A	B	C	D1	D2	E	F	G1	G2	H1	H2	J	K	L	M	N	P	K.O. X	K.O. Y
30	SMH	All	8.83 224	12.30 312	7.12 181	1.39 35	1.44 37	6.00 152	7.50 191	2.64 67	2.16 55	2.08 53	2.62 66	14.28 363	1.37 35	1.37 35	1.88 48	4.38 111	1.83 46	0.5 0.75 1	0.5 0.75 1
30	LH	All	9.83 250	16.30 414	8.62 219	1.39 35	1.44 37	7.00 178	11.50 292	2.64 67	2.16 55	2.08 53	2.62 66	16.78 426	1.31 33	1.75 44	2.13 54	4.88 124	1.83 46	1 1.25 1.5	0.5 0.75
60	SPH																				
100	SQH	All	12.83 326	25.30 643	8.62 219	1.39 35	1.44 37	10.00 254	20.50 521	2.64 67	2.16 55	2.08 53	2.62 66	19.78 502	1.31 33	1.94 49	2.44 62	6.38 162	1.83 46	1 1.25 2 2.5	0.5 0.75
200	SVH	All	12.83 326	40.30 1024	9.12 232	1.39 35	1.44 37	10.00 254	35.50 902	2.64 67	2.16 55	2.08 53	2.62 66	20.28 515	1.31 33	2.31 59	2.69 68	6.38 162	1.83 46	1 1.25 2 2.5	0.5 0.75

Table 16.225: NEMA 4 and 4X Stainless Steel Only Enclosures *[50]*

Rating (A)	Type	No. of Poles	Forms		Dimensions for Stainless Steel Enclosures												Bottom Hub Only	Top & Bottom Hub
					A	B	C	D	E	F	G	H	I	J	K	L	W	X
30	LW LXW	Any	Standard, F, R6, Y48		8.13 206	7.88 200	16.19 411	1.56 40	5.00 127	15.00 381	0.60 15	1.94 49	14.75 375	2.00 51	2.63 67	0.31 8	0.75	1.5
			A3, A12, C, C6, P, T		12.62 321	7.81 198	14.69 373	2.56 65	7.50 191	13.50 343	0.63 16	3.38 86	18.44 468	1.69 43	2.31 59	0.31 8	0.75	1
30	SMW	2–5	EH	Std., A12, C, C6, P, X	6.38 162	7.13 181	13.19 335	1.56 40	3.25 83	12.00 305	0.63 16	1.19 30	11.81 300	1.63 41	2.31 59	0.31 8	0.75	1
			MH	Std., F, X														
			EH	T	12.63 321	7.11 181	14.69 373	2.56 65	7.50 191	13.50 343	0.63 16	3.19 81	18.50 470	1.64 42	2.31 59	0.31 8	0.75	1
			EH	N, R6	14.88 378	7.25 184	16.31 414	2.56 65	9.75 248	15.00 381	0.63 16	3.19 81	20.88 530	2.06 52	2.63 67	0.31 8	0.75	1.5
			MH	A3, C, C6, T, N, P, R6														
60	SPW	2–5	EH	Std., A12, C, C6, P, X	8.13 206	7.88 200	16.19 411	1.56 40	5.00 127	15.00 381	0.60 15	1.94 49	14.75 375	2.00 51	2.63 67	0.31 8	0.75	1.5
			MH	Std., A3, C, C6, P, X														
			EH	T, N, R6	14.88 378	7.25 184	16.31 414	2.56 65	9.75 248	15.00 381	0.63 16	3.88 98	20.88 530	2.06 52	2.63 67	0.31 8	0.75	1.5
			MH	A3, C, C6, T, N, P, R6														
100	SQW	2–3	EH	Std., A12, C, C6, F, N, R6, P, T, T10-13, X	18.15 461	8.77 223	32.21 818	3.08 78	12.00 305	30.50 775	0.61 15	3.67 93	26.71 678	2.58 66	3.19 81	0.44 11	0.75	2.5
			MH	Std., A3, C, C6, F, N, P, R6, T, T10-13, X														
		4–5	EH	Std., A12, C, C6, F, P *[51]*	18.15 461	8.77 223	32.21 818	3.08 78	12.00 305	30.50 775	0.61 15	3.67 93	26.71 678	2.58 66	3.19 81	0.44 11	0.75	2.5
			MH	Std., A3, C, C6, P *[51]*														
			EH	N, R6, T, T10-13	22.15 563	9.77 248	42.21 1072	3.08 78	16.00 406	40.50 1029	0.61 15	3.67 93	31.71 805	2.33 59	2.88 73	0.44 11	0.75	2.5
			MH	N, R6, T, T10-13														
200	SVW	All	EH, MH	Standard and All Forms	22.15 563	9.77 248	42.21 1072	3.08 78	16.00 406	40.50 1029	0.61 15	3.67 93	31.71 805	2.33 59	2.88 73	0.44 11	0.75	2.5
300	SXW	All	EH, MH	Standard and All Forms	17.21 437	12.63 321	47.21 1199	4.11 104	9.00 229	46.00 1168	0.61 15	4.59 117	28.32 719	3.11 79	5.75 146	0.56 14	0.75	3.5
400,	SYW	All	EH, MH	Standard and All Forms	20.21 513	12.13 308	65.21 1656	4.11 104	12.00 305	64.00 1626	0.61 15	4.59 117	30.82 783	2.67 68	4.50 114	0.56 14	0.75 *[52]*	Two 3 *[52]*
600	SZW																	
800	SJW	2–3	With or without any Forms		34.50 876	23.50 597	101.00 2565	Floor Mounting										

EH = Electrically Held. MH = Mechanically Held.

NEMA 3R Enclosures

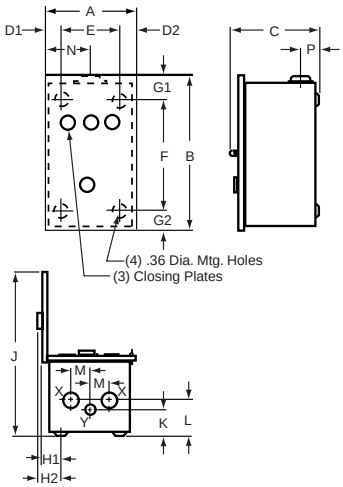

NEMA 4 and 4X Enclosures

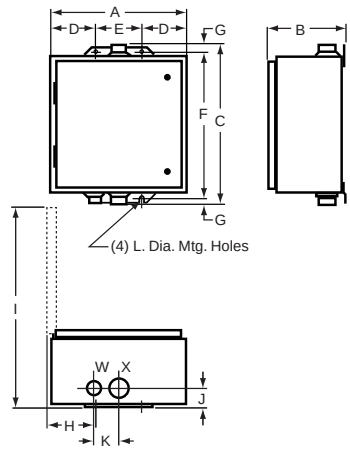

Dimensions: **in.**
mm

[50] For glass polyester enclosures (through 100 A), see Table 16.106.
[51] All Type K Forms.
[52] X hub is 1/4" left of center. W hub shown is another X hub. K dimension is distance between two X hubs. Actual W hub is located 3-3/16" to the right of X hub shown.

© 2019 Schneider Electric
All Rights Reserved
11/20/2019

Courtesy of Steven Engineering, Inc - (800) 258-9200 - sales@steveneng.com - www.stevenengineering.com

NEMA 12/3R and Night-Master™, NEMA 3R

Table 16.226: See Figures: NEMA 12/3R (30–600 A) and NEMA 12/3R (800 A) (EH = Electrically Held; MH = Mechanically Held)

Ampere Rating	Type	Number of Poles	Form(s)		Dimensions A	B	C	D	E	F	G	H	I	J
30	LA LXA	Any	Standard, F, R6, Y48		**8.13** 206	**8.50** 216	**15.75** 400	**1.56** 40	**5.00** 127	**15.00** 381	**0.31** 8	**2.13** 54	**14.75** 375	**0.31** 8
			A3, A12, C, C6, P, T		**14.88** 378	**7.88** 200	**16.00** 406	**2.56** 65	**9.75** 248	**15.00** 381	**0.5** 13	**3.66** 93	**21.25** 540	**0.31** 8
30	SMA	2-5	EH	Std., A12, C, C6, P, X	**6.38** 162	**8.53** 217	**12.75** 324	**1.56** 40	**3.25** 83	**12.00** 305	**0.38** 10	**3.56** 90	**12.50** 318	**0.31** 8
			MH	Std., F, P, X										
			EH	T	**11.88** 302	**7.75** 197	**13.50** 343	**2.56** 65	**6.75** 171	**12.75** 324	**0.38** 10	**3.66** 93	**18.12** 460	**0.31** 8
			EH	N, R6	**14.88** 378	**7.88** 200	**16.00** 406	**2.56** 65	**9.75** 248	**15.00** 381	**0.50** 13	**3.66** 93	**21.25** 540	**0.31** 8
			MH	A3, C, C6, T, N, P, R6										
60	SPA	2-5	EH	Std., A12, C, C6, P, X	**8.13** 206	**9.28** 236	**16.00** 406	**1.56** 40	**5.00** 127	**15.00** 381	**0.50** 13	**3.66** 93	**15.38** 391	**0.31** 8
			MH	Std., A3, C, C6, P, X										
			EH	T, N, R6	**14.88** 378	**7.88** 200	**15.75** 400	**2.56** 65	**9.75** 248	**15.00** 381	**0.38** 10	**3.66** 93	**21.25** 540	**0.31** 8
			MH	A3, C, C6, T, N, P, R6										
100	SQA	2, 3	EH	Std., A12, C, C6, F, N, R6, P, T, T10-13, X	**18.15** 461	**9.24** 235	**31.50** 800	**3.08** 78	**12.00** 305	**30.50** 775	**0.50** 13	**3.67** 93	**26.71** 678	**0.44** 11
			MH	Std., A3, C, C6, F, N, P, R6, T, T10-13, X										
		4, 5	EH	Std., A12, C, C6, F, N, P, *[53]*										
			MH	Std., A3, C, C6, P, *[53]*										
			EH	N, R6, T, T10-13, *[53]*	**22.15** 563	**10.24** 260	**41.50** 1054	**3.08** 78	**16.00** 406	**40.50** 1029	**0.50** 13	**3.67** 93	**31.71** 805	**0.44** 11
			MH	N, R6, T, T10-13, *[53]*										
200	SVA	All	EH and MH	Standard and All Forms	**22.15** 563	**10.24** 260	**41.50** 1054	**3.08** 78	**16.00** 406	**40.50** 1029	**0.50** 13	**3.67** 93	**31.71** 805	**0.44** 11
300	SXA	All	EH and MH	Standard and All Forms	**17.21** 437	**13.33** 339	**47.00** 1194	**4.11** 104	**9.00** 229	**46.00** 1168	**0.50** 13	**4.59** 117	**28.32** 719	**0.56** 14
400, 600	SYA, SZA	All	EH and MH	Standard and All Forms	**20.21** 513	**13.00** 330	**65.00** 1651	**4.11** 104	**12.00** 305	**64.00** 1626	**0.50** 13	**5.31** 135	**30.87** 784	**0.69** 18
800	SJA	2-3	With or without any Forms		**93.00** 2362	**34.50** 876	**23.50** 597	Floor Mounting						

Table 16.227: Night-Master™ Outdoor Lighting Contactors (Short Version)—NEMA 3R Enclosures (see Figure: Night-Master Style)

Ampere Rating	Description	Type Number	A	B	C	D	E	F	G	H	J *[54]*	K	L	M	Knockouts N	P	Q
30	Disconnect Switch and Circuit Breaker Types	SMC61, 62, 81	**23.50** 597	**15.00** 381	**8.42** 214	**10.50** 267	**19.00** 483	**22.38** 568	**7.00** 178	**2.18** 55	1.50 38	**2.13** 54	**2.13** 54	**2.13** 54	0.50–0.75	1–1.25 1.50	0.50–0.75
60		SPC61, 62, 81															
100		SQC61, 62, 81	**34.53** 877	**20.00** 508	**8.42** 214	**10.50** 267	**30.04** 763	**33.41** 849	**7.00** 178	**2.18** 55	**2.0** 51	**2.68** 68	**2.68** 68	**3.44** 87	0.50–0.75	1–1.25 2–2.50	1–1.25 1.5-2.0
200	Disconnect Switch Type	SVC61, 62	**48.37** 1229	**19.00** 483	**9.12** 232	**10.53** 267	**44.00** 1118	**47.25** 1200	**7.00** 178	**2.18** 55	**2.50** 64	**2.68** 68	**2.68** 68	**3.44** 87	0.50–0.75	1–1.25 2–2.50	1–1.25 1.5–2.0
	Circuit Breaker Type	SVC81															

Table 16.228: Night-Master™ Outdoor Lighting Contactors (Long Version)—NEMA 3R Enclosures (see Figure: Night-Master Style)

Ampere Rating	Description	Type Number	A	B	C	D	E	F	G	H	J *[54]*	K	L	M	Knockouts N	P	Q
30	Disconnect Switch and Circuit Breaker Types	SMC63, 64, 83	**38.88** 987	**15.00** 381	**8.42** 214	**10.42** 265	**34.38** 873	**37.76** 959	**7.00** 178	**2.18** 55	**1.50** 38	**2.13** 54	**2.13** 54	**2.13** 54	0.50–0.75	1–1.25 1.50	0.50–0.75
60		SPC63, 64, 83															
100		SQC63, 64, 83	**42.53** 1080	**20.00** 508	**8.42** 214	**10.42** 265	**38.04** 966	**41.41** 1052	**7.00** 178	**2.18** 55	**2.0** 51	**2.68** 68	**2.68** 68	**3.44** 87	0.50–0.75	1–1.25 2–2.50	1.–1.25 1.5–2.0
200	Disconnect Switch Type	SVC63, 64	**56.37** 1432	**19.00** 483	**9.12** 232	**10.53** 267	**52.00** 1321	**55.25** 1403	**7.00** 178	**2.18** 55	**2.50** 64	**2.68** 68	**2.69** 68	**3.44** 87	0.50–0.75	1–1.25 2–2.50	1–1.25 1.5–2.0
	Circuit Breaker Type	SVC83															

NOTE: These dimensions are for reference only. If you need precise measurements, contact the Customer Care Center at 1-888-778-2733.

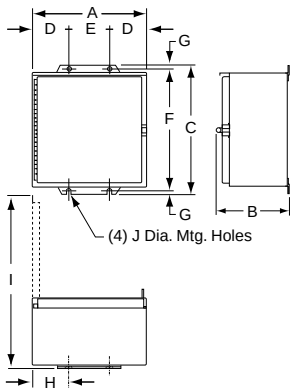

Figure 16.20: NEMA 12/3R (30–600 A)

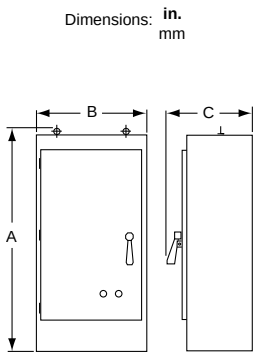

Figure 16.21: NEMA 12/3R (800 A)

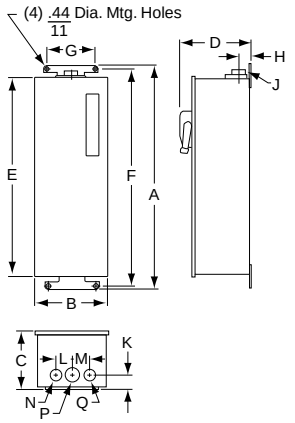

Figure 16.22: Night-Master Style

[53] All Type K Forms using Class 9001 Type K control units.
[54] Conduit size.

© 2019 Schneider Electric
All Rights Reserved
11/20/2019

Courtesy of Steven Engineering, Inc - (800) 258-9200 - sales@steveneng.com - www.stevenengineering.com

Combination Lighting Contactors

Table 16.229: See Figure: NEMA 1 Enclosure, Combination Devices

Ampere Rating	Type	Dimensions *[55]*															Top & Bot.		Sides
		A	B	C	D	E	F	G	H	I	J	K	L	M	N	O	W	X	Y
30	SMG6_, SMG8_	**9.50** 241	**22.50** 572	**8.37** 213	**6.38** 162	**20.50** 521	**14.68** 373	**1.81** 46	**1.69** 43	**3.37** 86	**3.38** 86	**1.06** 27	**3.25** 83	**2.18** 55	**1.25** 32	**0.87** 22	0.50-0.75	0.50-0.75	.50
	SMG7_, SMG9_	**13.75** 349	**23.00** 584	**8.36** 212	**10.63** 270	**21.00** 533	**20.07** 510	**1.87** 47	**1.88** 48	**3.76** 96	**2.06** 52	**1.06** 27	**3.25** 83	**2.18** 55	**1.25** 32	**0.87** 22	0.50-0.75-1.0	0.50-0.75-1.0	.50
60	SPG6_, SPG8_	**10.50** 267	**26.00** 660	**9.62** 244	**7.37** 187	**24.00** 610	**17.00** 432	**2.12** 54	**2.00** 51	**4.00** 102	**2.06** 52	**1.06** 27	**3.25** 83	**2.18** 55	**1.25** 32	**0.87** 22	1.0-1.25	0.50-0.75	.50
	SPG7_, SPG9_	**15.00** 381	**28.75** 730	**9.62** 244	**11.62** 295	**26.25** 667	**21.50** 546	**2.18** 55	**2.00** 51	**4.00** 102	**2.56** 65	**1.31** 33	**3.25** 83	**2.18** 55	**1.25** 32	**0.87** 22	1.0-1.25	0.50-0.75	.50

Table 16.230: See Figure: NEMA 1 Enclosure

Ampere Rating	Type	Dimensions *[55]*															Top & Bot.		Sides
		A	B	C	D	E	F	G	H	I	J	K	L	M	N	O	W	X	Y
100	SQG6_, SQG7_ SQG81, SQG91	**15.25** 387	**39.50** 1003	**10.60** 269	**9.25** 235	**3.00** 76	**22.68** 576	**41.00** 1041	**2.69** 68	**5.38** 137	**2.83** 72	**3.74** 95	**5.00** 127	—	**1.21** 31	**0.90** 23	1.-1.25 2.-2.50	0.50-0.75	0.50
200	SVG6_, SVG7_ SVG81, SVG91	**16.00** 406	**50.00** 1270	**10.68** 271	**10.00** 254	**3.00** 76	**23.68** 601	**51.50** 1308	**2.69** 68	**5.38** 137	**2.83** 72	**3.74** 95	**5.00** 127	—	**1.21** 31	**0.90** 23	2.50	0.50-0.75	0.50
300	SXG6_, SXG7_	**20.00** 508	**75.00** 1905	**14.37** 365	**12.00** 305	**4.00** 102	**29.43** 748	**77.00** 1956	**3.19** 81	—	**3.52** 89	**7.00** 178	**9.25** 235	—	—	—	0.50-0.75	3.00	—
	SXG81, SXG91	**20.00** 508	**63.00** 1600	**14.37** 365	**12.00** 305	**4.00** 102	**27.43** 697	**65.00** 1651	**3.19** 81	—	**3.52** 89	**7.00** 178	**5.00** 127	—	—	—	0.50-0.75	3.00	—
400	SYG81, SYG91	**36.00** 914	**90.00** 2286	**17.00** 432	Floor Mounting Enclosure												—	—	—
600	SZG81, SZG91																		

NOTE: These dimensions are for reference only. If you need precise measurements, contact the Customer Care Center at 1-888-778-2733.

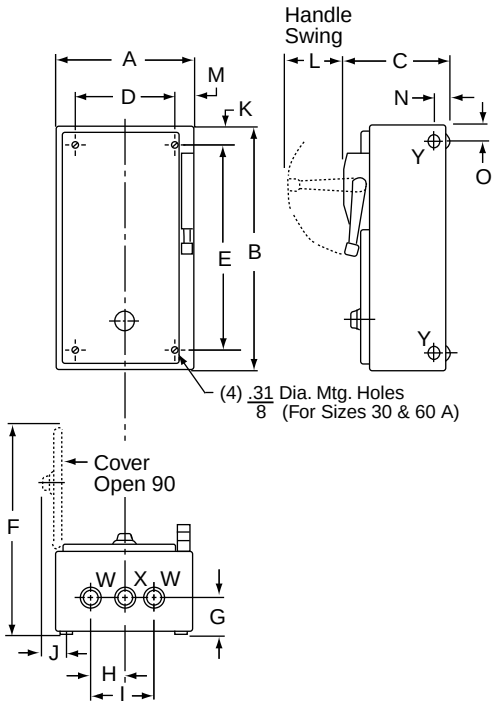

Figure 16.23: NEMA 1 Enclosure, Combination Devices

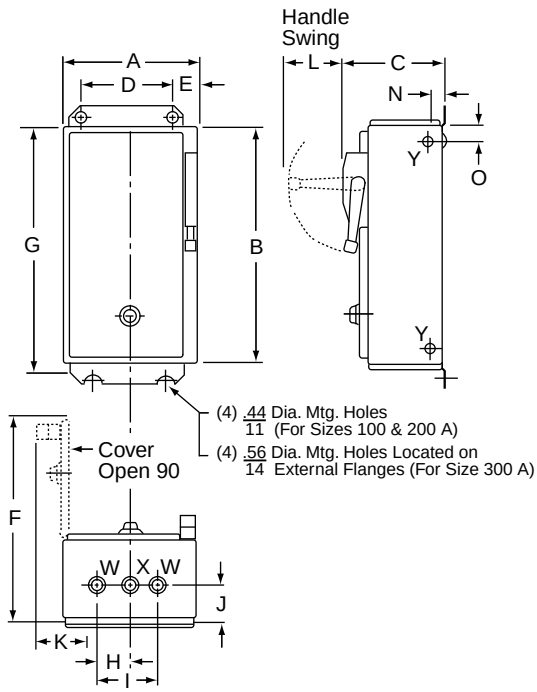

Figure 16.24: NEMA 1 Enclosure

[55] Dimensions are the same for **Form FF4T** (standard control transformer), **Form FF4T11** (100 VA extra capacity) and **Form FF4T12** (200 VA extra capacity).

© 2019 Schneider Electric
All Rights Reserved
11/20/2019

Courtesy of Steven Engineering, Inc - (800) 258-9200 - sales@steveneng.com - www.stevenengineering.com

Table 16.231: See Figure: NEMA 4, 4X Enclosure

Ampere Rating	Type	Dimensions *[56]*													
		A	B	C	D	E	F	G	H	I	J	K	L	W	X
30	SMW6_, SMW8_	**9.50** 241	**8.36** 212	**24.76** 629	**3.25** 83	**2.50** 64	**4.50** 114	**23.50** 597	**0.63** 16	**3.00** 76	**1.62** 41	**2.31** 59	**14.31** 363	0.75 Hub	1.0 Hub
	SMW7_, SMW9_	**13.75** 349	**8.36** 212	**25.26** 642	**3.25** 83	**4.75** 121	**4.25** 108	**24.00** 610	**0.63** 16	**5.25** 133	**1.62** 41	**2.31** 59	**20.14** 512	0.75 Hub	1.0 Hub
60	SPW6_, SPW8_	**10.50** 267	**9.61** 244	**28.26** 718	**3.25** 83	**2.50** 64	**5.50** 140	**27.00** 686	**0.63** 16	**3.00** 76	**2.00** 51	**2.63** 67	**16.56** 421	0.75 Hub	1.50 Hub
	SPW7_, SPW9_	**15.00** 381	**9.61** 244	**31.01** 788	**3.25** 83	**5.38** 137	**4.25** 108	**29.75** 756	**0.63** 16	**5.88** 149	**2.00** 51	**2.63** 67	**21.06** 535	0.75 Hub	1.50 Hub
100	SQW6_, SQW7_ SQW81, SQW91	**15.25** 387	**10.60** 269	**41.76** 1061	**5.00** 127	**2.50** 64	**10.25** 260	**40.50** 1029	**0.63** 16	**3.24** 82	**2.61** 66	**3.19** 81	**22.18** 563	0.75 Hub	2.50 Hub
200	SVW6_, SVW7_ SVW81, SVW91	**16.00** 406	**10.56** 268	**52.26** 1327	**5.00** 127	**2.50** 64	**11.00** 279	**51.00** 1295	**0.63** 16	**3.24** 82	**2.61** 66	**3.19** 81	**23.00** 584	0.75 Hub	2.50 Hub
300	SXW6_, SXW7_	**20.00** 508	**14.21** 361	**78.12** 1984	**9.25** 235	**4.00** 102	**12.00** 305	**77.00** 1956	**0.56** 14	**4.77** 121	**2.96** 75	**3.50** 89	**29.43** 748	0.75 Hub	3.50 Hub
	SXW81, SXW91	**20.00** 508	**14.21** 361	**66.12** 1679	**5.00** 127	**4.00** 102	**12.00** 305	**65.00** 1651	**0.56** 14	**4.77** 121	**2.96** 75	**3.50** 89	**27.43** 697	0.75 Hub	3.50 Hub
400	SYW81, SYW91	**36.00** 914	**17.71** 450	**98.00** 2489	Floor Mounting Enclosure									—	—
600	SZW81, SZW91														

Table 16.232: See Figure: NEMA 12/3R Enclosure

Ampere Rating	Type	Dimensions *[56]*									
		A	B	C	D	E	F	G	H	I	J
30	SMA6_, SMA8_	**9.50** 241	**8.36** 212	**24.26** 616	**3.25** 83	**2.50** 64	**4.50** 114	**23.50** 597	**0.38** 10	**3.25** 83	**14.31** 363
	SMA7_, SMA9_	**13.75** 349	**10.10** 257	**24.76** 629	**3.25** 83	**4.75** 121	**4.25** 108	**24.00** 610	**0.38** 10	**5.50** 140	**22.00** 559
60	SPA6_, SPA8_	**10.50** 267	**9.61** 244	**27.76** 705	**3.25** 83	**2.50** 64	**5.50** 140	**27.00** 686	**0.38** 10	**3.25** 83	**16.56** 421
	SPA7_, SPA9_	**15.00** 381	**10.98** 279	**30.51** 775	**3.25** 83	**5.38** 137	**4.25** 108	**29.75** 756	**0.38** 10	**6.13** 156	**23.43** 595
100	SQA6_, SQA7_ SQA81, SQA91	**15.25** 387	**10.59** 269	**42.00** 1067	**5.00** 127	**3.00** 76	**9.25** 235	**41.00** 1041	**0.50** 13	**3.75** 95	**22.31** 567
200	SVA6_, SVA7_ SVA81, SVA91	**16.00** 406	**10.52** 267	**52.50** 1334	**5.00** 127	**3.00** 76	**10.00** 254	**51.50** 1308	**0.50** 13	**3.75** 95	**23.00** 584
300	SXA6_, SXA7_	**20.00** 508	**14.21** 361	**78.00** 1981	**9.25** 235	**4.00** 102	**12.00** 305	**77.00** 1956	**0.50** 13	**7.75** 197	**29.43** 748
	SXA81, SXA91	**20.00** 508	**14.21** 361	**66.00** 1676	**5.00** 127	**4.00** 102	**12.00** 305	**65.00** 1651	**0.50** 13	**7.75** 197	**27.43** 697
400	SYA81, SYA91	**36.00** 914	**17.71** 450	**90.00** 2286	Floor Mounting Enclosure						
600	SZA81, SZA91										

NOTE: These dimensions are for reference only. If you need precise measurements, contact the Customer Care Center at 1-888-778-2733.

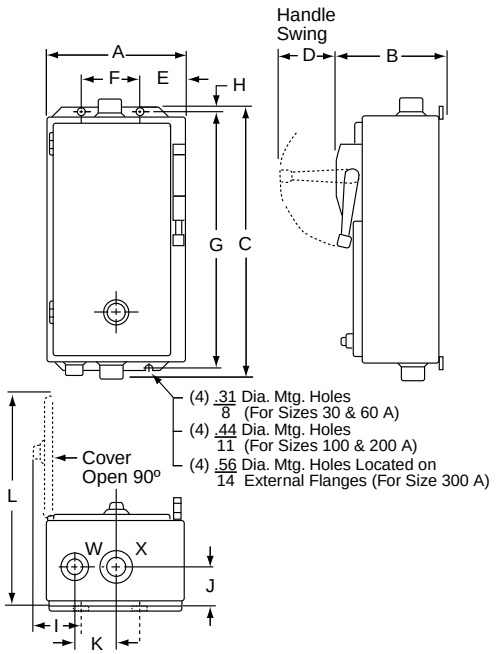

Figure 16.25: NEMA 4, 4X Enclosure

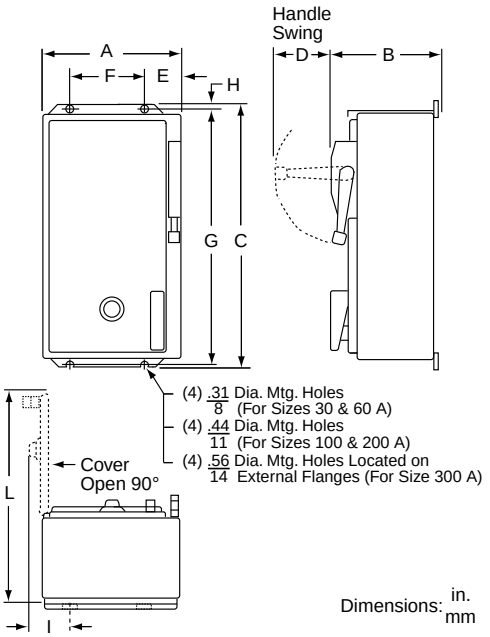

Figure 16.26: NEMA 12/3R Enclosure

[56] Dimensions are the same for **Form FF4T** (standard control transformer), **Form FF4T11** (100 VA extra capacity) and **Form FF4T12** (200 VA extra capacity).

© 2019 Schneider Electric
All Rights Reserved
11/20/2019

Courtesy of Steven Engineering, Inc - (800) 258-9200 - sales@steveneng.com - www.stevenengineering.com

8910DP22V09
Definite Purpose Contactor

8910DP42V14
Definite Purpose Contactor

8910DPA33V04
Definite Purpose Contactor

Definite purpose contactors are ideal for heating, air conditioning, refrigeration, data processing, and food service equipment. New compact 1 and 2-Pole contactors are available along with standard size 2, 3, and 4-Pole devices.

They feature quick connect terminals and binder head screws for easy wiring. Box lugs are standard on 40 A contactors and larger. An exclusive DIN track mounting option may reduce installation costs. Coils can be changed on the Type DPA contactors (50 to 90 A) quickly without a tool. Auxiliary contact modules snap on either side of the Type DPA contactors.

- Compact Design
- Industry Standard Mounting
- Double Break Contacts
- Low Coil VA
- Straight-Through Wiring
- Low Cost

Table 16.233: Coil Voltage Codes

Voltage		Code Type DP, DPA
60 Hz	50 Hz	
24	24	V14
24	—	—
120	110	V02
208	—	—
208-240	220	V09
230-240	220	—
277	—	V04
480	440	V06 *[1]*
600	550	V07 *[2]*

Table 16.234: Compact 1-Pole Contactors—600 Vac Maximum (replace ●●● with the voltage code)

Full Load Amperes	Locked Rotor Amperes			Resistive Load Amperes	N.O. Poles	Type *[3]*
	277 V	460 V	575 V			
20	120	100	80	30	1	DP11●●●
25	150	125	100	35	1	DP21●●●
30	150	125	100	40	1	DP31●●●
40	240	200	160	50 (277 V max.) 40 (above 277 V)	1	DP41●●●

Table 16.235: Compact 2-Pole Contactors—600 Vac Maximum (above 240 V, all lines must be switched) (replace ●●● with the voltage code)

Full Load Amperes	Locked Rotor Amperes			Resistive Load Amperes	N.O. Poles	Type *[3]*
	277 V	460 V	575 V			
20	120	100	80	30	2	DP12●●●
25	150	125	100	35	2	DP22●●●
30	150	125	100	40	2	DP32●●●
40	240	200	160	50	2	DP42●●●

Table 16.236: 2, 3, and 4-Pole Contactors—600 Vac Maximum (above 240 V, all lines must be switched) (replace ●●● with the voltage code)

Full Load Amperes	Locked Rotor Amperes			Resistive Load Amperes	Horsepower Ratings				N.O. Poles	Type *[3]*
	230 V	460 V	575 V		115 V 1Ø	230 V 1Ø	230 V 3Ø	460/575 V 3Ø		
20	120	100	80	30	1.5	3	7-1/2	7-1/2	2 3 4	DPA12●●● DPA13●●● DPA14●●●
25	150	125	100	35	2	5	10	15/20	2 3 4	DPA22●●● DPA23●●● DPA24●●●
30	180	150	120	40	2	5	10	15/20	2 3 4	DPA32●●● DPA33●●● DPA34●●●
40	240	200	160	50	3	7-1/2	10	20/25	2 3 4	DPA42●●● DPA43●●● DPA44●●●
50	300	250	200	65	3	10	15	30	2 3	DPA52●●● DPA53●●●
60	360	300	240	75	5	10	25	30	2 3	DPA62●●● DPA63●●●
75	450	375	300	94	5	15	25	40	2 3	DPA72●●● DPA73●●●
90	540	450	360	120	7-1/2	20	30	50	2 3	DPA92●●● DPA93●●●

[1] Not available for Type DP11 through DP31 single-pole devices.
[2] Not available for Type DP one- and two-pole devices.
[3] Replace the three bullets (●●●) in the catalog number with the coil voltage code. Refer to the standard voltage codes listed in Table 16.233.

© 2019 Schneider Electric
All Rights Reserved
11/20/2019

Courtesy of Steven Engineering, Inc - (800) 258-9200 - sales@steveneng.com - www.stevenengineering.com

Table 16.237: 2 Normally Open & 2 Normally Closed 4-Pole Contactors—600 Vac Maximum (replace ●●● with the voltage code)

Full Load (A)	Resistive Load (A)	N.O. Poles	N.C. Poles *[4]*	Class 8910	
				Type *[5]*	Form
20	25	2	2	DPA14●●●	Y392
25	35	2	2	DPA24●●●	Y392
30	40	2	2	DPA34●●●	Y392

NOTE: N.C. poles on outside. N.C. poles open before N.O. poles close.

Table 16.238: Auxiliary Contacts, 5 A, 600 Vac Rated

For Use with Class 8910, Type	Contact Arrangement	Class 9999 Type
		20–90 A
DPA	1 N.O. 1 N.C. 1 N.O. & 1 N.C. 2 N.O.	D10 D01 D11 D20

Table 16.239: NEMA 1 General Purpose Enclosures for Type DP, DPA Contactors

Class 8910 Type	Full Load (A)	Poles	Class 9991 Type
DP	20–40	1 & 2	DPG1
DPA	20–40	2 & 3	DPG1
DPA	50 20–40	2 & 3 4	DPG2
DPA	60–75	2 & 3	DPG3
DPA	90	2 & 3	DPG4

Table 16.240: Terminals

Full Load (A)	Power Terminals	
	Type of Lug*[6]*	Wire Range*[7]*
20–30 A 40 A 50–60 A 75–90 A	Binder Head Box Lug or Ring Tongue Box Lug or Ring Tongue Box Lug or Ring Tongue	14–8 14–6 14–2 14–1/0

Table 16.241: Miscellaneous Parts

Description	Class 9999 Type
DIN mounting bracket attachment (Type DPA, 20–60 A)	DMB1
Type DP Series B Cover	DPC1

Table 16.242: Factory Modifications

Modification	Type	Form
Factory installed auxiliary contacts	—	*[8]*
Pressure wire connectors, 20–30 A	DPA	Y122
Box lugs, 20–30 A	DP DPA	Y124
DIN mounting bracket attached (35 mm style), 20–60 A	DP DPA	Y135
Contact cover for Type DP Series B	—	Y248
UL Listed label on device	DP	U1 *[9]*
Ring tongue terminals: 30–90 A 3 pole DPA contactors	DPA	RT

Types DP, DPA Application Data

Factory Modifications

Auxiliary contacts can be factory installed along with a DIN mounting bracket option. Special terminations are also available.

Table 16.243: Application Data

Description	Specification
Mechanical Life (depending on the application)	500,000 operations
Electrical Life (depending on the application) Type DP Type DPA	 100,000 operations 200,000 operations
Duty Cycle	Continuous
Approvals: UL Component Recognized UL Listed (Form U1) CSA Certified DPA is CE marked	 File E3190, CCN NLDX2 File E3190, CCN NLDX File LR25490, Class 321104

NOTE: See page 16-124 for replacement contacts.

Table 16.244: Type DPA Coil Voltage Codes

Voltage, 60 Hz	Voltage, 50 Hz	Voltage Code
24	24	V14
120	110	V02
208–240	220	V09
277	—	V04
480	440	V06 *[10]*
600	550	V07 *[10]*

Table 16.245: Coil Replacement

No tools required (DPA50–60A)

Table 16.246: Class 8910 Type DPA Replacement Coils (replace ●●● with the voltage code)

Full Load (A)	Poles	Class 9998 Type *[11]*	Volt-Amperes*[12]*	
			Inrush	Sealed
50–60 A	2 & 3	DA2●●●	109	10
75–90 A	2 & 3	DA3●●●	214	19

[4] Above 240 V, all lines must be switched.
[5] Replace the three bullets (●●●) in the catalog number with the coil voltage code. Refer to the standard voltage codes in Table 16.244.
[6] For Ring Tongue, add RT after coil voltage.
[7] Solid or stranded copper wire only.
[8] Contact your local Schneider Electric sales office.
[9] Form U1, Type DPA3• and DPA4• have lighting ratings per pole: Tungsten 250 V, 60 Hz, 30 A; and Ballast 277 V, 60 Hz, 40 A.
[10] Available for Type DPA contactors only.
[11] Append the voltage code from Table 16.244. Example: The coil for Class 8910 Type DPA53V02, 120 V, 60 Hz is Class 9998 Type DA2**V02**.
[12] For Types DP11 through DP32: Inrush 30 VA; Sealed 5 VA.

© 2019 Schneider Electric
All Rights Reserved
11/20/2019

Courtesy of Steven Engineering, Inc - (800) 258-9200 - sales@steveneng.com - www.stevenengineering.com

Types DP, DPA Approximate Dimensions

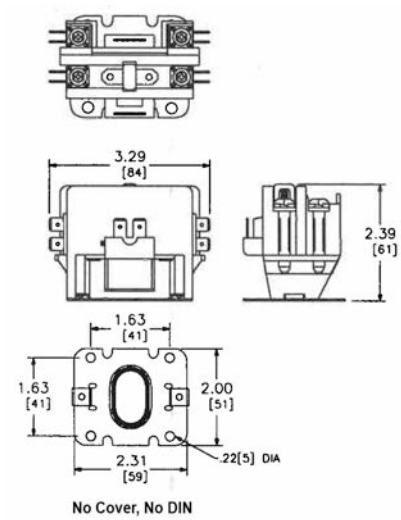

Type DP—1-Pole
20 through 40 Full Load Amperes

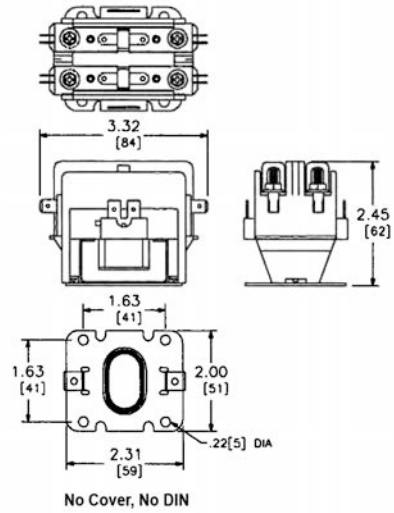

Type DP—2-Pole
20 through 40 Full Load Amperes

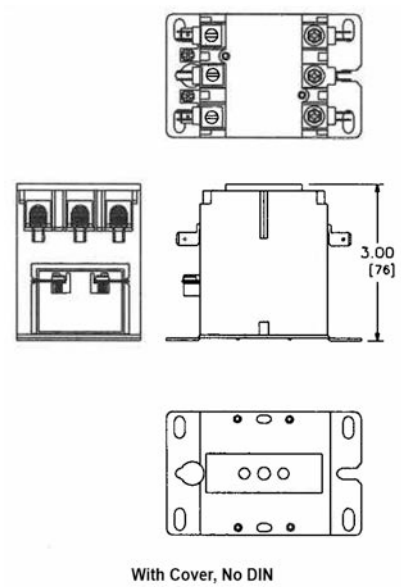

Type DPA—2 and 3-Pole
20 through 40 Full Load Amperes

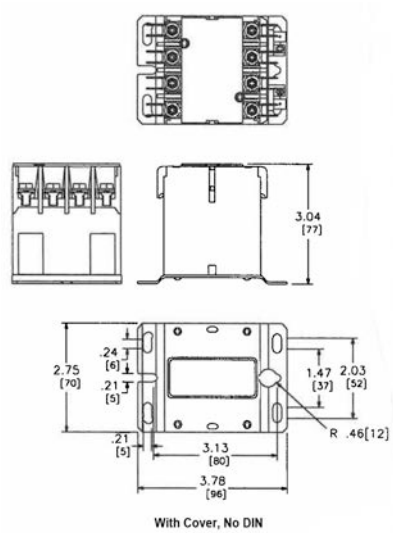

Type DPA—4-Pole
20 through 40 Full Load Amperes

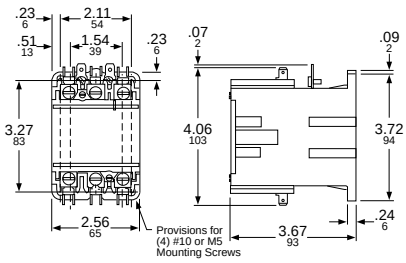

Type DPA—2 and 3-Pole
50 and 60 Full Load Amperes

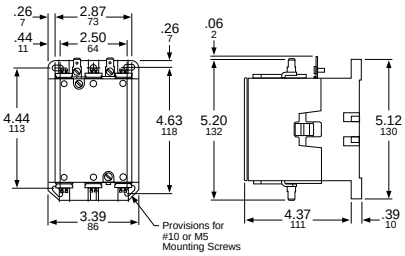

Type DPA—2 and 3-Pole
75 and 90 Full Load Amperes

Dimensions: **in.**
mm

© 2019 Schneider Electric
All Rights Reserved
11/20/2019

Courtesy of Steven Engineering, Inc - (800) 258-9200 - sales@steveneng.com - www.stevenengineering.com

8911DPSO33V09 Definite Purpose Starter

Type DPSG23V02

Types DPS and H through M

Class 8911 definite purpose starters are inexpensive starters for applications with relatively low duty cycles. Typical applications include air compressors, agricultural equipment, pumps, and HVAC equipment. Definite purpose starters offer:

- Low cost
- Small size
- Melting alloy overload block
- Trip-free reset mechanism
- Open type or enclosed
- 500,000 mechanical operations

Table 16.247: 2- and 3-Pole Starters—600 Vac Maximum

No. of Poles	Full Load (A)	Horsepower Ratings				Open Type	NEMA 1 Enclosed	No. of Thermal Units [1]
		115 V 1Ø	230 V 1Ø	230 V 3Ø	460/575 V 3Ø	Type [2], [3]	Type[2], [3]	
2-Pole Single Phase	20	1.5	3	—	—	DPSO12●●●	DPSG12●●●	1
	25	2	5	—	—	DPSO22●●●	DPSG22●●●	
	30	2	5	—	—	DPSO32●●●	DPSG32●●●	
	40	3	7.5	—	—	DPSO42●●●	DPSG42●●●	
	50	3	10	—	—	DPSO52●●●	DPSG52●●●	
3-Pole Poly-Phase	20	1.5	3	7.5	7.5	DPSO13●●●	DPSG13●●●	3
	25	2	5	10	15/20	DPSO23●●●	DPSG23●●●	
	30	2	5	10	15/20	DPSO33●●●	DPSG33●●●	
	40	3	7.5	10	20/25	DPSO43●●●	DPSG43●●●	
	50	3	10	15	30	DPSO53●●●	DPSG53●●●	

Table 16.248: Cross Reference Existing/Replacement Class 8911

Existing Device	Replacement Device
HO33	DPSO13
HG33	DPSG13
JO33	DPSO23
JG33	DPSG23
KO33	DPSO33
KG33	DPSG33
KO43	[4]
KG43	[4]
LO33	DPSO43
LG33	DPSG43
MO33	DPSO53
MG33	
MO43	DPSG53
MG43	[4]

Table 16.249: Miscellaneous Parts and Kits

Description	Class & Type
Start-Stop push button kit[5]	8911DPB1
Hand-Off-Auto selector switch kit[6]	8911DSS1
Standard N.C. overload relay contact	9998SO1
N.C. and N.O. isolated overload relay alarm contacts	9999SO4
Overload relay jumper strap	9998SO31

Table 16.250: Replacement Magnet Coil for Class 8911 Type DPS

Full Load (A)	Poles	Class 9998 Type	Volt A	
			Inrush	Sealed
50 A	2 and 3	DA2[7]	109	10

See page 16-124 for replacement contacts for DPS devices.

Table 16.251: Coil Voltage Codes

Voltage, 60 Hz	Voltage, 50 Hz	Voltage Code
24	24	V14
120	110	V02
208–240	220	V09
277	—	V04
480	440	V06
600	550	V07

Table 16.252: Auxiliary Contacts for Type DPS Starters

Description	20–90 A
	Class 9999 Type
1 N.O.	D10
1 N.C.	D01
1 N.O./1 N.C.	D11
2 N.O.	D20

NOTE: Auxiliary contacts must be field installed.

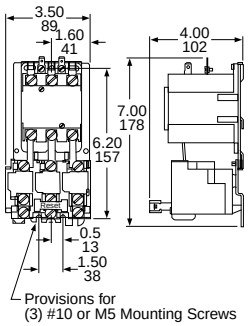

Type DPSO—2 and 3-Pole and DSO 20–50 Full Load Amperes

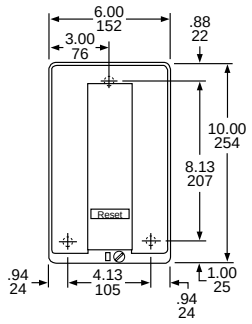

Type DPSG—2 and 3-Pole 20–40 Full Load Amperes

Table 16.253: Ratings—Overload Contacts and Auxiliary Contacts

Device	Volts AC	Pilot Duty – AC Only (35% Power Factor)		Continuous Current Rating
		Make	Carry and Break	
9998 SO1 9999 SO4 9999 R20 & R21 9999 D10, D01, D11 & D20	120 or Less	30 A	3 A	5 A
	120–600	3600 VA	360 VA	5 A

Table 16.254: How to Order

To Order Specify:	Catalog Number			
	Class	Typse	Coil Voltage Code	Form(s)
• Class Number • Type Number • Voltage Code • Form(s)	8911	DPSG33	V02	

[1] See for selection information on standard trip thermal units.
[2] Holding circuit contacts are not provided as standard; refer to Table 16.252 for kit.
[3] Replace the three bullets (●●●) in the catalog number with the coil voltage code. Refer to the standard voltage codes listed in Table 16.251.
[4] Type DPS 4-pole starter not available. Suggest 3-pole device with auxiliary contact.
[5] Does not include holding circuit interlock—order auxiliary contact.
[6] Use for 20 to 40 A starters. For 50 A starters, use the 9999BLX bracket.
[7] Append the coil voltage code from Table 16.251.

© 2019 Schneider Electric
All Rights Reserved
11/20/2019

Courtesy of Steven Engineering, Inc - (800) 258-9200 - sales@steveneng.com - www.stevenengineering.com

Type SSD4030

Type SSE4050

Class 8940 Type SS, XS Selection

Class 8940 Type SS and XS panels in NEMA 3R enclosures are specifically designed for pumping applications. Extra space is provided for field installation of auxiliary equipment.

- Type S Contactor provided as standard
- Approved for submersible pump applications
- Motor Logic™ Class 10/20 (Selectable) SSOLR through 200 hp–480 V, 100 hp–240 V. Included in the catalog number for Type SS (the H30 suffix is required only for eMCP units).
  (Includes rubber boot.)
- All prices include a Start push button and a Hand-Off-Auto selector switch
- Adjustable trip current
- Phase failure sensitive
- Ambient temperature compensated overload
- All devices are UL Listed, and marked "Suitable For Use As Service Equipment"

NOTE: Motor Logic™ SSOLRs are designed to protect 50/60 Hz, three-phase AC motors from overload and phase loss conditions. Open Delta systems or grounded B-phase systems are difficult to balance and could cause the Motor Logic SSOLR to trip. For applications of this nature, it is recommended that bimetallic overload relays (Form B12) be used.

Table 16.255: 3-Pole Polyphase—480 Vac Maximum (50–60 Hz)—Fusible or Thermal-Magnetic Circuit Breaker *[1]*

Volts	Maximum Hp Polyphase	Coil Voltage	Fuse Clip (A) *[2]*	Type
240	3, 5, 7.5 10, 15 20, 25, 30 40, 50 75 100 100 200 250, 300	240–60 220–50	30 60 100 200 LLL36400U31X *[3]* 400 LLL36600U31X *[3]* MJL36800 *[3]* PLL34120 *[3]*	SSC2007 *[4][5]* SSD2015 *[4][5]* SSE2030 *[4]* SSF2050 *[4]* XSG2075 *[6]* SSG2100 *[4]* XSG2100 *[6]* XSH2200 *[6]* XSJ2300 *[6]*
480	3, 5, 7-1/2, 10 15, 20, 25 30 40, 50 60, 75, 100 150 200 200 300, 350, 400 500, 600	480–60 440–50	30 60 60 100 200 LLL36400U31X*[3]* 400 LLL36600U31X *[3]* MJL36800 *[3]* PLL34120 *[3]*	SSC4010 *[4][5]* SSD4025 *[4][5]* SSD4030 *[4][5]* SSE4050 *[4]* SSF4100 *[4]* XSG4150 *[6]* SSG4200 *[4]* XSG4200 *[6]* XSH4400 *[6]* XSJ4600 *[6]*

Table 16.256: 3-Pole Polyphase—480 Vac Maximum (50–60 Hz)—Electronic Motor Circuit Protector (MCP)

Volts	Max. Hp Polyphase	Coil Voltage *[6]*	Circuit Breaker *[7]*	Type
240	30	240–60 220–50	HLL36100M73	XSE2030V03H30
	40		JLL36250M75	XSE2040V03H309 *[8]*
	50		JLL36250M75	XSF2050V03H30
480	40	480–60 440–50	HLL36100M73	XSE4040V06H30
	50			XSE4050V06H30
	75		JLL36250M75	XSE4075V06H309 *[8]*
	100		JLL36250M75	XSF4100V06H30

Table 16.257: Class 8940—UL Listed Short Circuit Ratings

NEMA Size	NEMA Fuse Class or Voltage	Enclosure	Available Amperes RMS Symmetrical
Fusible Type			
0–3	Class H or K	Standard	5,000
0–3	Class R	Standard	100,000
0–2	Class H or K	Standard	5,000
0–2	Class R	Standard	100,000
4–5	Class H or K	Standard	10,000
4–5	Class R	Standard	100,000
6	Class H or K	Standard	18,000
6	Class R	Standard	100,000
Thermal-Magnetic Circuit Breaker Type			
0-5	0-480 V	Standard	100,000
6, 7	0-480 V	Standard	65,000

NOTE: Standard enclosures include non-oversize NEMA 1, 4 & 4X Stainless, and 12.

For How to Order information, see page 16-28.

[1] To substitute an IEC ambient compensated bimetallic overload relay (up to size 5) for the Motor Logic SSOLR, request Form B12 and state motor hp (no charge). This applies to the above (SSx) devices only.
[2] Fuse clips are sized for use with dual-element time-delay fuses.
[3] Circuit breaker disconnect supplied. (See Section 7 for circuit breaker adjustment range.)
[4] A voltage code is not required for 240 V or 480 V common control with 8940SS controllers.
[5] To select a Motor Logic SSOLR with an FLA lower than the standard NEMA sizing, use the four-character **Form H30●**. See the section "Solid-State Overload Relay Forms."
[6] See Table 16.258 for coil voltage codes.
[7] See page 7-32 for circuit breaker adjustment range.
[8] FLA is 45–135.

© 2019 Schneider Electric
All Rights Reserved
11/20/2019

Courtesy of Steven Engineering, Inc - (800) 258-9200 - sales@steveneng.com - www.stevenengineering.com

Type WC3S2V06

Type XE3S2V02B12S

Class 8940 Type W, X

Class 8940 style S2 pumping plant panels in NEMA 3R enclosures are specifically designed for oil field applications. All panels are supplied with an electronic motor circuit protector (MCP) or a visible blade, fused, disconnect switch. This line of pumping plant panels features:

- Rugged spring latches for easy access without a tool
- Side mounted control units for convenient operation
- Door retainer available for windy areas
- Includes Hand-Off-Auto selector switch
- Motor Logic™ Class 10/20 (selectable) SSOLR included (the H30 suffix is required).
- UL Listed for use as service equipment for motors
- Extra panel space for additional electrical controls
- All devices are UL Listed, and marked "SUITABLE FOR USE AS SERVICE EQUIPMENT"

NOTE: Motor Logic™ SSOLRs are designed to protect 50/60 Hz, three-phase AC motors from overload and phase loss conditions. Open Delta systems or grounded B-Phase systems are difficult to balance and could cause the Motor Logic SSOLR to trip. For such applications, we recommend bimetallic overload relays (Form B12).

Table 16.260: 3-Pole Polyphase—480 Vac Maximum (50–60 Hz)

V	Max. Hp Poly-phase	Coil Voltage *[12]*	NEMA Size	Fusible Disconnect Type		Circuit Breaker Type	
				Fuse Clip (A) *[13]*	Type	Frame Size	Type
240	7-1/2	240–60 220–50	1	30	WC1S2V03H30 *[14]*	HLL36030M71	XC1S2V03H30 *[14]*
	10		2	60	WD1S2V03H30 *[14]*	HLL36050M72	XD1S2V03H30 *[14]*
	15					HLL36100M73	XD2S2V03H30 *[14]*
	30		3	100	WE1S2V03H30	HLL36100M73	XE1S2V03H30
	50		4	200	WF1S2V03H30	JLL36250M75	XF2S2V03H30
480	10	480–60 440–50	1	30	WC3S2V06H30	HLL36030M71	XC4S2V06H30
	15		2	60	WD3S2V06H30	HLL36030M71	XD3S2V06H30
	25		2			HLL36050M72	XD4S2V06H30
	50		3	100	WE3S2V06H30	HLL36100M73	XE3S2V06H30
	100		4	200	WF3S2V06H30	JLL36250M75	XF4S2V06H30

Table 16.261: Factory Modifications (Forms)

Description	Form
Substitute Class 10 IEC overload relay – state motor hp (NEMA Sizes 0–4 only)	B12
Control transformer with fused primary, Types: • NPD, NPE, NPF, SSC, WC, XC (50 VA) • NPG, SSD, XD, WD (100 VA) • NPJ, SSE, XE, WE (150 VA) • SSF, XF, WF (300 VA) • SG, NSG, XSG (50 VA and an interposing control relay)	F4T
Factory-installed door wind latch assembly in a standard Class 8940 Type SSC, SSD, SSE, SSF, XSE, and XSF	G45
Elapsed time meter	G97
Substitute Class 10/20 (selectable) Motor Logic™ SSOLR *[15]*	H30
On Delay Timer	K25
Off Delay Timer	K26
Program timer with day omission feature	K141
Backspin timer (time delay upon energization)	K15
Start push button (S2 panels only)	A28
Slim panel (Types WC, WD, WE, XC, XD, XE only)	L8
Short panel (Types SSE, SSF, XE-S2 and XF-S2 only)	L9
Pilot light (specify lens color). Does not include auxiliary contact.	P *[16]*
Separate control	S
Auxiliary contacts (specify N.O. or N.C.)	X *[17]*
Special UL panel label for modified UL Listed devices on non-standard panels (requires approval by the manufacturing plant)	Y1
Lightning arrestor	Y1532
Move control operators from the enclosure side to the door	Y45
Phase failure, phase reversal relay with time delay including under and over voltage protection	R44
Substitute standard trip melting alloy overload relays	Y61
Substitute quick-trip melting alloy overload relay (Sizes 1 and 2 only)–Not available on IEC style contactors	Y611
Substitution of Class R rejection fuse clips for standard fuse clip. (8940 RD, RE, RF, RG, MD, ME, MF, MG, SSC, SSD, SSE, SSF, SSG, WC, WD, WE and WF)	Y1071

Table 16.258: Coil Voltage Codes

Voltage		Code
60 Hz	50 Hz	
24 *[9] [10]*	—	V01
120 *[9]*	110 *[9]*	V02
208 *[9]*	—	V08
240	220	V03
—	380	V05
480	440	V06
600 *[9]*	550 *[9]*	V07
Specify	Specify	V99

Table 16.259: Replacement Overload Relay for Square D Class 8940 Pump Panel with IEC Style Bimetallic Overload Relays Mounted on Current Transformers

Ampere Range	Number of Poles	Form	Series	Type *[11]*
40–63 A	3	B12	B	9065TJF40
63–100 A	3	B12	B	9065TJF63
100–160 A	3	B12	B	9065TJF100
160–250 A	3	B12	B	9065TJF160

[9] **Form S** required for separate control.
[10] 24 V coils are not available on Size 4–7 starters. On Size 1–3 starters, 24 V coils are available using Form S.
[11] A retro-fit reset kit is required for pre-series B pump panels. See page 16-109 for selection.
[12] Coil voltage code must be supplied to order this product. See Table 16.258 for codes.
[13] Fuse clips are sized for use with dual-element time-delay fuses.
[14] To select a Motor Logic SSOLR with an FLA lower than the standard NEMA sizing, use the four-character **Form H30●**. See the section "Solid-State Overload Relay Forms."
[15] Motor Logic SSOLR are designed to protect 50/60 hertz three-phase AC motors from overload, phase unbalance and phase loss conditions. Open Delta systems or grounded B-phase systems are difficult to balance and could cause the Motor Logic SSOLR to trip. For applications of this nature, it is recommended that bi-metallic overload relays (Form B12) be used.
[16] Indicate pilot light color as **Form P1** (red) or **Form P2** (green). See page 16-117 for more selections.
[17] To determine the maximum number of auxiliary contacts which can be added to each Type S device and for the appropriate "X Form," refer to Table 16.85 (for non-reversing single-speed devices) or to Table 16.170 (for reversing or two-speed devices).

© 2019 Schneider Electric
All Rights Reserved
11/20/2019

Courtesy of Steven Engineering, Inc - (800) 258-9200 - sales@steveneng.com - www.stevenengineering.com

For How to Order Information, see page 16-28.

Approximate Dimensions

NOTE: These dimensions are for reference only. If you need precise measurements, contact the Customer Care Center at 1-888-778-2733.

Table 16.262:

Type	Fig.	A in. mm	B in. mm	C in. mm	D in. mm	E in. mm	F in. mm	G in. mm	H in. mm	J in. mm	K in. mm	L Conduit	M in. mm	Knockouts R	Knockouts S	Knockouts T	V in. mm
NPD/E/F SSC SSD	1	**39.05** 992	**13.73** 349	**6.67** 169	**9.70** 246	**33.05** 839	**37.93** 963	**7.00** 178	**2.41** 61	**3.00** 76	**3.00** 76	2.5	**2.41** 61	0.5–0.75	1.25–1.5	0.5–0.75	**1.41** 36
NPG/J SSE/F XSE/F	1	**49.00** 1245	**19.15** 486	**8.81** 224	**10.37** 263	**44.07** 1119	**47.88** 1216	**7.00** 178	**2.17** 55	**2.69** 68	**3.44** 87	2.5	**2.57** 65	0.5–0.75	1–1.25 1–2.5	1–1.25 1.5–2	**1.41** 36
WC—S2 WD—S2 XC—S2 XD—S2	1	**38.50** 978	**19.00** 483	**7.29** 185	**9.39** 239	**34.00** 864	**37.38** 949	**7.00** 178	**2.18** 55	**2.13** 54	**2.13** 54	1.5	**2.12** 54	0.5–0.75	1–1.25 1.5	0.5–0.75	—
WE—S2 WF—S2 XE—S2 XF—S2	1	**56.50** 1435	**23.00** 584	**8.23** 209	**10.33** 262	**52.00** 1321	**55.38** 1407	**7.00** 178	**2.18** 55	**2.69** 68	**3.44** 87	2	**2.68** 68	0.5–0.75	1–1.25 2–2.5	1–1.25 1.5–2	**1.50** 38
SSG XSG	1	**75.50** 1892	**22.00** 559	**13.80** 351	**17.55** 446	**73.00** 1854	**74.50** 13	**14.00** 356	N/A	**0.56** 14	N/A	N/A	N/A	N/A	N/A	N/A	**1.50** 38
XSH	2	**82.50** 2096	**36.00** 914	**20.00** 508	**23.25** 591	**80.00** 2032	**33.75** 857	**16.50** 419	N/A	N/A	N/A	N/A	N/A	N/A	N/A	N/A	N/A
XSJ	2	**92.50** 2350	**34.00** 864	**20.00** 508	**23.25** 591	**90.00** 2286	**31.75** 806	**16.50** 419	N/A	N/A	N/A	N/A	N/A	N/A	N/A	N/A	N/A

NOTE: Illustrations may not represent the actual enclosure. They are intended for dimensional information only.

Dimensions: **in.** / mm

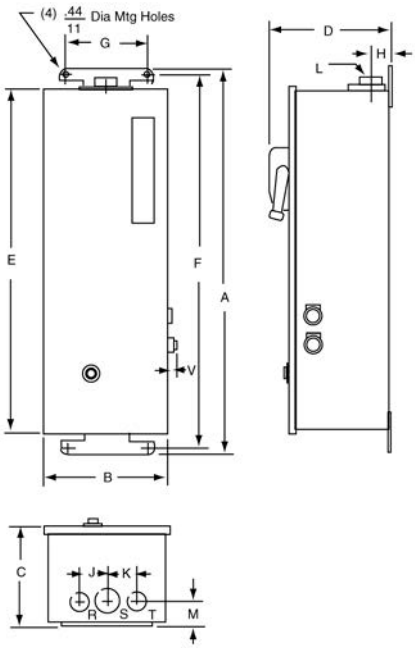

Figure 1

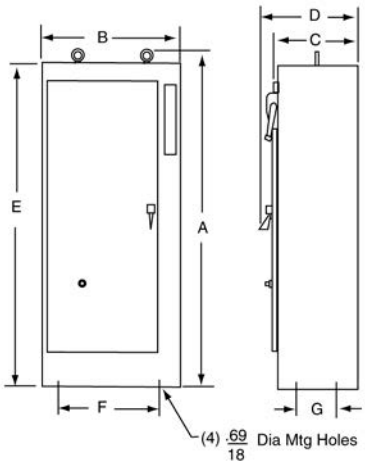

Figure 2

© 2019 Schneider Electric
All Rights Reserved
11/20/2019

Courtesy of Steven Engineering, Inc - (800) 258-9200 - sales@steveneng.com - www.stevenengineering.com

Selection

Duplex Motor Controllers are used to control two motors, and consist of two starters in a common enclosure. Two separate disconnect switches or circuit breakers with operators are included with all combination devices. Unless **Form Y68** is specified, an alternation circuit (a Class 8501 Type XO40 relay) is included, which alternately operates first one motor and then the other on each successive closing of a pilot device. Both motors will be energized should a second pilot device close. All devices incorporate a terminal block to simplify wiring of pilot devices A and B. Typical applications include pump motors where a second pump is required for peak demand periods yet alternation is desirable to equalize pump wear.

Table 16.263: 3-Pole Polyphase—600 Vac Maximum (50–60 Hz)
Non-Combination Type—Without Disconnect—With Electric Alternation
(replace ●●● with the voltage code)
(Devices require 6 thermal units. See Thermal Unit Selection, page 16-132.)

NEMA Size	Maximum Rating Each Motor		NEMA 1 General Purpose Enclosure	NEMA 4/4X Watertight and Dusttight Enclosure Stainless Steel	NEMA 12 (NEMA 3 and 3R) *[1]* Dusttight and Driptight Industrial Use Enclosure	Open Type
	Voltage	Hp Polyphase	Type *[2]*	Type *[2]*	Type *[2]*	Type *[2]*
0	200–230 460–575	3 5	NBG10●●●	NBW10●●●	NBA10●●●	NBO10●●●
1	200–230 460–575	7.5 10	NCG20●●●	NCW20●●●	NCA20●●●	NCO20●●●
2	200 230 460–575	10 15 25	NDG30●●●	NDW30●●●	NDA30●●●	NDO30●●●
3	200 230 460–575	25 30 50	NEG40●●●	NEW40●●●	NEA40●●●	NEO40●●●
4	200 230 460–575	40 50 100	NFG50●●●	NFW50●●●	NFA50●●●	NFO50●●●

Table 16.264: 3-Pole Polyphase—600 Vac Maximum (50–60 Hz) Combination Thermal Magnetic Circuit Breaker Type—With Electric Alternation (replace ●●● with the voltage code) (Devices require 6 thermal units. See Thermal Unit Selection, page 16-132.)

Motor Starter Voltage	Max. Hp Polyphase	Coil Voltage	NEMA Size	Circuit Breaker		NEMA 1 General Purpose Enclosure	NEMA 4/4X Watertight and Dusttight Stainless Steel Enclosure	NEMA 12 (NEMA 3 and 3R)*[1]* Dusttight and Driptight Industrial Use Enclosure
				Frame Size	Ampere Rating	Type *[2]*	Type *[2]*	Type *[2]*
200 (208)	2 3	208–60	0	HLL36015 HLL36020	15 20	CBG06 ●●● CBG08●●●	CBW06 ●●● CBW08●●●	CBA06 ●●● CBA08●●●
	5 7.5		1	HLL36035 HLL36050	35 50	CCG12●●● CCG15●●●	CCW12●●● CCW15●●●	CCA12●●● CCA15●●●
	10		2	HLL36060	60	CDG22●●●	CDW22●●●	CDA22●●●
	15 20 25		3	HLL36100 HLL36125 HLL36150	100 125 150	CEG32●●● CEG36●●● CEG38●●●	CEW32●●● CEW36●●● CEW38●●●	CEA32●●● CEA36●●● CEA38●●●
	30 40		4	JLL36200 JLL36250	200 250	CFG41●●● CFG44●●●	CFW41●●● CFW44●●●	CFA41●●● CFA44●●●
230 (240)	2 3	240–60 220–50	0	HLL36015 HLL36020	15 20	CBG06●●● CBG08●●●	CBW06●●● CBW08●●●	CBA06●●● CBA08●●●
	5 7.5		1	HLL36035 HLL36045	35 45	CCG14●●● CCG16●●●	CCW14●●● CCW16●●●	CCA14●●● CCA16●●●
	10 15		2	HLL36060 HLL36090	60 90	CDG22●●● CDG24●●●	CDW22●●● CDW24●●●	CDA22●●● CDA24●●●
	25 30		3	HLL36150	150	CEG38●●●	CEW38●●●	CEA38●●●
	40 50		4	JLL36225 JLL36250	225 250	CFG43●●● CFG44●●●	CFW43●●● CFW44●●●	CFA43●●● CFA44●●●
460 (480)	5	480–60 440–50	0	HLL36015	15	CBG10●●●	CBW10●●●	CBA10●●●
	7.5 10		1	HLL36025 HLL36030	25 30	CCG18●●● CCG20●●●	CCW18●●● CCW20●●●	CCA18●●● CCA20●●●
	15 20 25		2	HLL36045 HLL36060 HLL36070	45 60 70	CDG26●●● CDG28●●● CDG30●●●	CDW26●●● CDW28●●● CDW30●●●	CDA26●●● CDA28●●● CDA30●●●
	30 50		3	HLL36080 HLL36150	80 150	CEG39●●● CEG40●●●	CEW39●●● CEW40●●●	CEA39●●● CEA40●●●
	75 100		4	JLL36200 JLL36250	200 250	CFG45●●● CFG47●●●	CFW45●●● CFW47●●●	CFA45●●● CFA47●●●

NOTE: For voltage codes used with control transformers, see page 16-118.

For How to Order Information, see page 16-28.

[1] NEMA 12 enclosures can be field modified for outdoor applications. For details, refer to Class 9991 on page 16-112.
[2] Replace the three bullets (●●●) in the catalog number with the coil voltage code. Refer to the standard voltage codes listed inTable 16.274.

© 2019 Schneider Electric
All Rights Reserved
11/20/2019

Courtesy of Steven Engineering, Inc - (800) 258-9200 - sales@steveneng.com - www.stevenengineering.com

Table 16.265: 3-Pole Polyphase—600 Vac Maximum (50–60 Hz) Combination Disconnect Switch Type—With Electric Alternation (Devices require 6 thermal units. See Thermal Unit Selection, page 16-132.)

Motor Voltage (Starter Voltage)	Max. Hp Poly-phase	Coil Voltage	NEMA Size	Fuse Clip Size (A) [3]	NEMA 1 General Purpose Enclosure	NEMA 4/4X Watertight and Dusttight Enclosure Stainless Steel	NEMA 12 (NEMA 3 and 3R) [4] Dusttight and Driptight Industrial Use Enclosure
					Type [5]	Type [5]	Type [5]
200 (208)	3	208-60	0	None 30	UBG10●●● DBG08●●●	UBW10●●● DBW08●●●	UBA10●●● DBA08●●●
	7.5		1	None 60	UCG20●●● DCG18●●●	UCW20●●● DCW18●●●	UCA20●●● DCA18●●●
	10		2	None 60	UDG30●●● DDG28●●●	UDW30●●● DDW28●●●	UDA30●●● DDA28●●●
230 (240)	3	240-60 220-50	0	None 30	UBG10●●● DBG08●●●	UBW10●●● DBW08●●●	UBA10●●● DBA08●●●
	7.5		1	None 60	UCG20●●● DCG18●●●	UCW20●●● DCW18●●●	UCA20●●● DCA18●●●
	15		2	None 60	UDG30●●● DDG28●●●	UDW30●●● DDW28●●●	UDA30●●● DDA28●●●
460 (480)	5	480-60 440-50 575 (600)	0	None 30	UBG10●●● DBG10●●●	UBW10●●● DBW10●●●	UBA10●●● DBA10●●●
	10		1	None 30	UCG20●●● DCG20●●●	UCW20●●● DCW20●●●	UCA20●●● DCA20●●●
	25		2	None 60	UDG30●●● DDG30●●●	UDW30●●● DDW30●●●	UDA30●●● DDA30●●●
	50		3	None 100	UEG40●●● DEG40●●●	UEW40●●● DEW40●●●	UEA40●●● DEA40●●●

Factory Modifications (Forms)

Table 16.266: Factory Modifications (Forms)

Description [6]	Enclosure Type	Form	NEMA Size 0–1	2	3	4
Pilot Devices in Cover[7] Start-Stop push buttons—one provided for each motor. (**Form C** or **Form Y68** required.)	1, 4, 12	A	X	X	X	X
Hand-Off-Auto selector switch—one provided for each motor.	1, 4,12	C	X	X	X	X
No. 1 Lead—No. 2 Lead selector switch for manual selection of lead pump. (**Form Y68** required.) Red On pilot light—one provided for each motor.	Any 1, 4, 12	C13 P1	X X	X X	X X	X X
Push-to-test, red On pilot light—one provided for each motor. Non-standard markings for pilot devices. Test push button for each starter.	1, 4, 12 Any Any	P21 G12 Y29	X X X	X X X	X X X	X X X
Control Circuit Modifications Fused control circuit without transformer One fuse Two fuses Fused control circuit transformer, two fuses in primary, with 600, 480, 240 or 208 V primary and 120 V secondary –one provided for each starter.	 Any Any Any	 F F4 F4T	 X X X	X X X	X X X	X X X
Fused control circuit transformer, two fuses in primary, one fuse in secondary—one provided for each starter. 100 VA additional capacity 200 VA additional capacity	Any Any Any	FF4T FF4T11 FF4T12	X X X	X X X	X X X[8]	X X[8] X[8]
Extra capacity control circuit transformer—two fuses in primary—one provided for each starter (see Table 16.267) 100 VA additional capacity 200 VA additional capacity Elapsed time meter for each starter	 Any Any Any	 F4T11 F4T12 G97	 X X X	 X X X	 X X X	 —[9] —[9] X
Pressure switch for each starter (Square D pressure switch 9012GAW25) Addition of 2 relays to modify controller for operation with single pole pilot devices Addition of 3 relays to modify controller for operation with single pole mercury float switches	Any Any Any	D R7 R8	X X X	X X X	X X X	X X X
Control circuit wired for separate 120 V source	Any	S	X	X	X	X
Addition of 1 N.O. unwired interlock per starter for use by customer (1 N.O. unwired interlock per starter is provided as standard.) Addition of 1 N.C. unwired interlock per starter for customer use	Any Any	X10 X01	X X	X X	X X	X X
Modified wiring for use with double pole mercury float switches **Deduct** for omission of electrical alternating circuit Additional Control circuit terminals—per wired terminal (5 point terminal block is standard) Unwired	Any Any Any Any	Y24 Y68 G56[10] G50[10]	X X X X	X X X X	X X X X	X X X X

Table 16.267: Capacity

NEMA Size	Standard Capacity (Form F4T)	100 VA Additional Capacity (Form F4T11)	200 VA Additional Capacity (Form F4T12)
	Class 9070 Type	Class 9070 Type	Class 9070 Type
0, 1	TF100	TF200	TF300
2	TF100	TF200	TF300
3	TF150	TF300	TF500
4	TF300	TF500	TF500

For How to Order Information, see page 16-28.

[3] The hp rating applies only when dual element time delay fuses are used.
[4] NEMA 12 enclosures can be field modified for outdoor applications. For details, refer to Class 9991 on page 16-112.
[5] Replace the three bullets (●●●) in the catalog number with the coil voltage code. Refer to the standard voltage codes listed in Table 16.274.
[6] These Forms are most commonly used. Other Forms may be available. Consult the Customer Care Center at 1-888-778-2733 for additional information.
[7] Not available on open style devices.
[8] Single primary voltage must be specified.
[9] Not available on this size. Use **Form FF4T●●**.
[10] Addition of terminal block 9080CA or 9080GR6 only. A 5–point terminal block is provided as standard for custom connection. A wiring diagram must be provided for factory wiring.

© 2019 Schneider Electric
All Rights Reserved
11/20/2019

Courtesy of Steven Engineering, Inc - (800) 258-9200 - sales@steveneng.com - www.stevenengineering.com

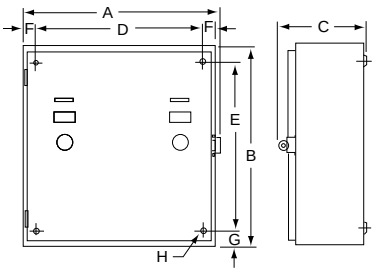

Figure 16.27: NEMA 1 Enclosure—Non-Combination

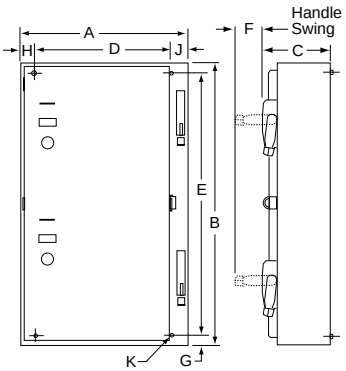

Figure 16.28: NEMA 1 Enclosure—Combination

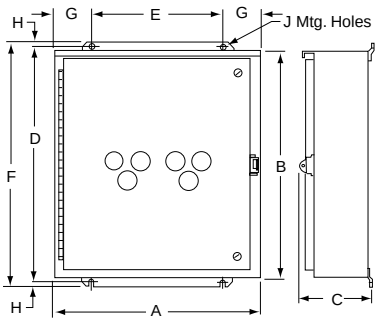

Figure 16.29: NEMA 4 and 12/3R Enclosure—Non-Combination

Table 16.274: Coil Voltage Codes

Voltage		Code
60 Hz	50 Hz	
24 *[11]*	—	V01
120 *[12]*	110	V02
208	—	V08
240	220	V03
—	380	V05
480	440	V06
600	550	V07
Specify	Specify	V99

Approximate Dimensions (in.)

NOTE: These dimensions are for reference only. If you need precise measurements, contact the Customer Care Center at 1-888-778-2733.

Table 16.268: NEMA 1 Enclosure—Non-Combination (Figure 1)

Starter Size	A	B	C	D	E	F	G	H
0, 1, or 2	20.5	24.13	8.69	17.88	21.5	1.31	1.31	0.31 Dia.
3 or 4	22.13	34	9.75	16	35.5	3.06	0.75	0.44 Dia.

Table 16.269: NEMA 1 Enclosure—Combination (Figure 2)

Starter Size	A	B	C	D	E	F	G	H	J	K
0, 1, or 2 (For Circuit Breaker and 30 A & 60 A Disconnect Switch)	20.38	35	9.63	17	32.5	3.31	1.25	1.25	1.25	0.44 Dia.
3 or 4 (For Circuit Breaker and 100 A Disconnect Switch)	32	44	10.75	24	46	4.88	1	2.5	2.5	0.56 Dia.

Table 16.270: NEMA 4 Enclosure—Non-Combination (Figure 3)

Starter Size	A	B	C	D	E	F	G	H	J
0, 1, or 2	20.5	24	8	25	15.38	26	2.56	0.5	0.31
3 or 4	22	34	9.13	35	17	36	2.5	0.5	0.56

Table 16.271: NEMA 4 Enclosure—Combination (Figure 4)

Starter Size	A	B	C	D	E	F	G	H	J	K
0, 1, or 2 (For Circuit Breaker and 30 A & 60 A Disconnect Switch)	20.5	35	9.56	36	15.38	37	2.56	0.5	0.31	3.31
3 or 4 (For Circuit Breaker and 100 A Disconnect Switch)	32	44	10.69	46	26	47	3	0.5	0.56	4.88

Table 16.272: NEMA 12/3R Enclosure—Non-Combination (Figure 3)

Starter Size	A	B	C	D	E	F	G	H	J
0, 1, or 2	20.5	24.25	8	25.5	14.38	26.5	3.06	0.5	0.44
3 or 4	22	34	9.13	35.5	16	36.5	3	0.5	0.44

Table 16.273: NEMA 12/3R Enclosure—Combination (Figure 4)

Starter Size	A	B	C	D	E	F	G	H	J	K
0, 1, or 2 (For Circuit Breaker and 30 A & 60 A Disconnect Switch)	20.5	35	9.56	36.5	14.38	37.5	3	0.5	0.44	3.31
3 or 4 (For Circuit Breaker and 100 A Disconnect Switch)	32.25	44.25	10.69	46	24	47	4.13	0.5	0.56	4.88

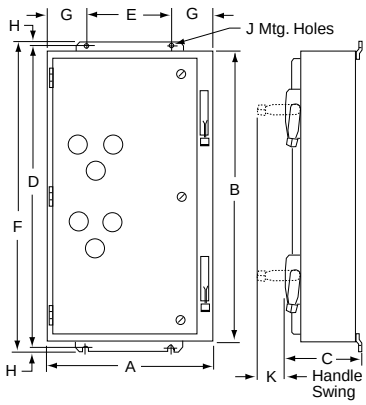

Figure 16.30: NEMA 4 and 12/3R Enclosure—Combination

NOTE: Illustrations may not represent the actual enclosure; they are intended for dimensional information only. Dimensions are in inches.

[11] 24 V coil is not available on Size 4. On Sizes 00–3, specify**Form S** (separate control).
[12] These voltage codes must include **Form S** (no additional charge).

© 2019 Schneider Electric
All Rights Reserved
11/20/2019

Courtesy of Steven Engineering, Inc - (800) 258-9200 - sales@steveneng.com - www.stevenengineering.com

8965DPR33V02 Hoist Contactor
600 Vac, 25 A
DPR, Angled

Class 8965 Type DPR reversing/hoist contactors are designed for the control of motors in hoists, overhead doors, small elevators, commercial laundry equipment, and other related products which use reversing motors. They are rated to perform in the short periods of jogging experienced in hoist service.

The coils are designed to operate on line voltages of 85–110% of rated voltage, and are for applications at 50 or 60 Hz only. Coils are easily replaced with external base removed.

Auxiliary contacts can easily be fieldadded to any Class 8965 reversing contactor. Type DPR contactors accept one auxiliary contact module with up to two isolated circuits per side (two modules per device). When auxiliary contacts are ordered separately, two modules are normally used for each device; one for forward, one for reverse.

Table 16.275: Reversing/Hoist Contactors—600 Vac Maximum (replace ●●● with the voltage code)

No. of Poles	Horsepower Ratings *[1]*				Open Type
	115 V 1Ø	230 V 1Ø	230 V 3Ø	460/575 V 3Ø	Type *[2]*
3-Pole Polyphase	1	2	5	7-1/2	DPR13●●●
	2	3	7-1/2	10	DPR23●●●
	2	5	10	15	DPR33●●●
	3	7-1/2	15	20	DPR43●●●
4-Pole Polyphase	1	2	5	7-1/2	DPR14●●●
	2	3	7-1/2	10	DPR24●●●
	2	5	10	15	DPR34●●●
	3	7-1/2	10	20	DPR44●●●

Table 16.276: Auxiliary Contacts Separate Module *[3]*

Description	Class 9999 Type
1 N.O.	D10
1 N.C.	D01
1 N.O.–1 N.C.	D11
2 N.O.	D20

Table 16.277: Factory Installed

Description	Form
1 N.O. Each Side	X1010
1 N.C. Each Side	X0101
1 N.O.–1 N.C. Each Side	X1111
2 N.O. Each Side	X2020

Table 16.278: Coil Voltage Codes

Volts, 60 Hz	Volts, 50 Hz	Voltage Code
24	24	V14
120	110	V02
208–240	220	V09
277	—	V04
480	440	V06
600	550	V07

Table 16.279: Approvals

UL Component Recognized—File E42240, CCN NLDX
CSA Certified—File LR25490, Class 3211 04

Approximate Dimensions

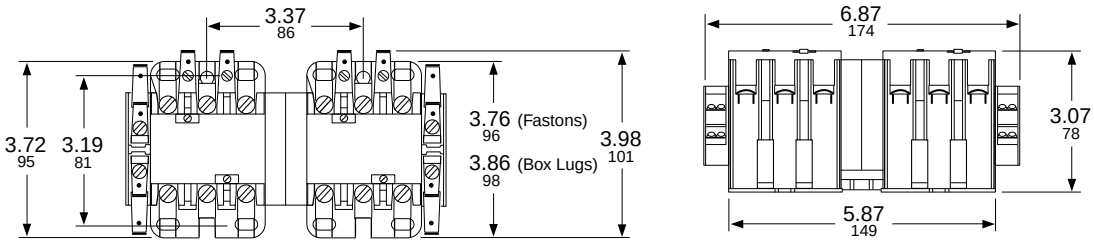

Type DPR13 through DPR43

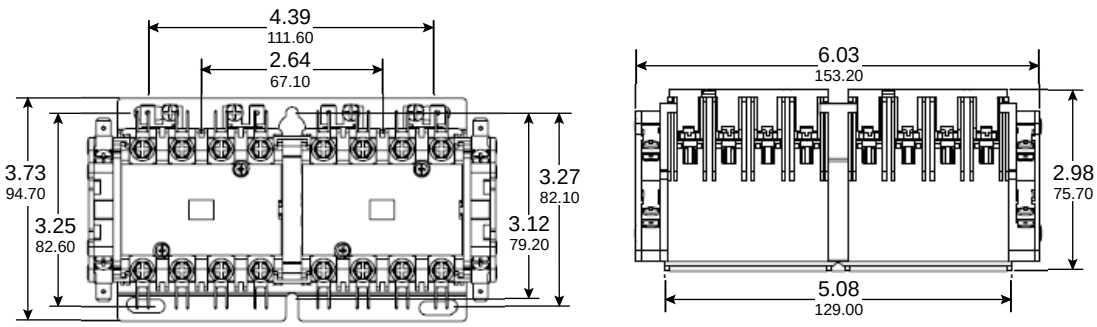

Type DPR14 through DPR44

[1] For rapid operation (jogging duty), use the next larger size contactor.
[2] Replace the three bullets (●●●) in the catalog number with the coil voltage code. Refer to the standard voltage codes listed in Table 16.278.
[3] Order two modules for Type DPR, one for each side.

© 2019 Schneider Electric
All Rights Reserved
11/20/2019

Courtesy of Steven Engineering, Inc - (800) 258-9200 - sales@steveneng.com - www.stevenengineering.com

Type SEO5

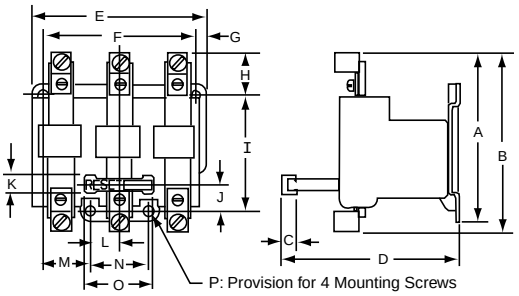

Type SEO Dimensions

Melting Alloy Overload Relay Selection

NEMA style thermal overload relays feature:

- Exclusive one-piece thermal unit
- Inverse time delay trip
- Trip free reset mechanism
- Replaceable contact units

Note that these overload relays do not include thermal units, which must be ordered and field installed separately. Slow trip (Class 30) and quick trip (Class 10) melting alloy thermal units are available for all Size 1, 2, 5 and 6, and some Size 3 and 4 applications.

Table 16.280: For Separate Mounting—Melting Alloy—600 V Maximum, AC or DC[1]

NEMA Size	Maximum Full Load Current (A)	Open Type for Separate Panel Mounting Left and Right Hand Types	Open Type Relay and Bracket Kit for Terminal Block Channel Mounting
			Type
Three Pole Construction (One Common N.C. Contact on Type S Only)—3 Thermal Units Required			
00–1	25	9065SEO5	9065SM2
2	45	9065SEO8	9065SM2
3	86	9065SEO12	—
4	133	9065SEO15	—

Table 16.281: Replacement Melting Alloy Overload Relays for Square D Class 8536 Starters

Locate Class 8536 Starter in this Column				Order Class 9065 Overload Relay from this Column	
NEMA Size	Type	Series	Number of Poles	Type	Number of Thermal Units Required
00	SA	A & B	2 3	9065SDO4 9065SDO5	1 3
0	SB	A	2 3–5	9065SDO4 9065SDO5	1 3 [2]
1	SC	A	2 3–5	9065SDO4 9065SDO5	1 3 [2]
1P	SC	A	2	9065SDO10	1
2	SD	A	2 3–5	9065SDO7 9065SDO8	1 3 [2]
3	SE	A	2 3 4 5	9065SDO11 9065SDO12 9065SDO13 9065SDO14	1 3 2 3
4	SF	A	3 4 5	9065SDO15 9065SDO16 9065SDO17	3 2 3
5	SG	A	3	Form Y500 and Series B, use 9065SEO5	3
6	SH	A & B	3	9065SEO5	3

Table 16.282: Special Features for Melting Alloy Overload Relays

Description	Form
Substitute 1-N.O. isolated alarm contact and 1-N.C. contact per relay. (Type S starters only) [3]	Y342
Substitute 2-N.C. contacts for standard N.C. contact per relay. (Type S starters only) [3]	Y344
Modify Type SDO12 relays to accept Type FB quick trip or SB slow trip thermal units. (Rejects Type CC standard trip units) [4]	Y81

Table 16.283: Approximate Dimensions, NEMA Style Melting Alloy Overload Relays

Type	Dimensions (in.)																Shipping Weight (lb)
	A	B	C	D	E	F	G	H	I	J	K	L	M	N	O	P	
SEO5	3.31	—	0.47	3.97	3.53	2.81	0.22	0.69	2.31	0.5	0.5	0.5	0.84	1	1.38	#10	1
SEO8	3.31	—	0.47	3.97	3.5	2.81	0.19	0.69	2.31	0.5	0.5	0.13	0.84	1	1.38	#10	1.25
SEO12	—	5.59	0.56	5.75	5.31	4.75	0.28	1.44	3.56	0.75	0.56	0.88	1.5	1.75	2	#1/4	3
SEO15	—	6.97	0.56	5.75	5.31	4.75	0.28	2.13	3.56	0.75	0.56	0.88	1.5	1.75	2	#1/4	4

NOTE: These dimensions are for reference only. If you need precise measurements, contact the Customer Care Center at 1-888-778-2733.

[1] The maximum power circuit rating for Type S separate-mounting overload relays is 600 Vac only. The maximum control circuit contact rating for Type S versions is 600 Vac only.
[2] For 4-pole starters used on two-phase systems, order two thermal units plus one Class 9998 Type SO31 jumper strap kit for every two starters. Each kit includes two jumper straps.
[3] Field modification possible. Order 9999S04 (for **Form Y342**) or 9999S05 (for **Form Y344**).
[4] This Form cannot be field modified.

© 2019 Schneider Electric
All Rights Reserved
11/20/2019

Courtesy of Steven Engineering, Inc - (800) 258-9200 - sales@steveneng.com - www.stevenengineering.com

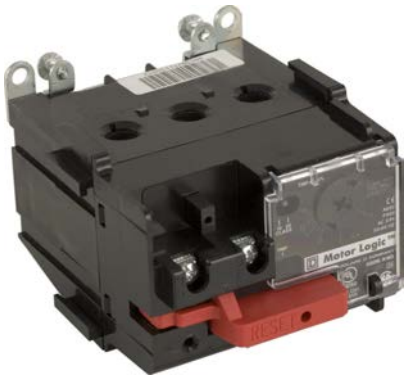

Motor Logic Solid-State Overload Relays

Motor Logic solid-state overload relays (SSOLRs) feature: 3 to 1 adjustment for trip current; phase loss and unbalance protection; direct replacement for Type S melting alloy. They are ambient insensitive and self–powered. Switch selectable trip class; Class II ground fault detection; and direct replacement for Type S melting alloy. Electrical remote reset is also available.

NOTE: Motor Logic SSOLRs are designed to protect 50/60 Hz, three-phase AC motors from overload, phase unbalance, and phase loss conditions. Open Delta systems or grounded B-phase systems are difficult to balance and could cause the Motor Logic SSOLR to trip.

Table 16.284: Class 10/20 (Selectable): For Separate Mounting Solid-State Overload Relay, 600 Vac Maximum

NEMA Size[5] (3-Pole)	Full Load Current Range (A)	Open Type
		Trip Class 10/20
00B	1.5–4.5 [6]	SFB20
00C	3–9 [6]	SFC20
0	6–18 [6]	SF020
1	9–27 [6]	SF120
2	15–45	SF220
3	30–90	SF320
4	45–135	SF420

Table 16.285: Class 10/20 (Selectable): Replacement SSOLR for Retrofit of Square D Type S Starter Solid-State Overload Relay 600 Vac Maximum

Locate 8536 Starter in this column		Order Class 9065 Overload Relay from this column
NEMA Size[5]	Full Load Current Range (A)	Open Type
		Trip Class 10/20
00B [6]	1.5–4.5	SFB20
00C [6]	3–9	SFC20
0 [6]	6–18	SF020
1 [6]	9–27	SF120
2	15–45	ST220
3	30–90	ST320
4	45–135	ST420
5 [7]	90–270	ST520
5 [8]	90–270	SF520
6 [7]	180–540	ST620
7 [7]	270–810	ST720

[5] Size 00B and 00C are not actual NEMA sizes. These designations are used to differentiate the lower FLA of these devices from the NEMA Size 00 Motor Logic solid-state overload relay.
[6] Size 00B, 00C, 0, and 1 come without lugs. Lower amperage loads can be protected by looping the power wires. Lugs are available. See Table 16.358.
[7] Size 5, 6, and 7 replacement overload relays are only for existing NEMA style Type S starters with a Motor Logic overload relay. External CTs and additional components are not included.
[8] Size 5 is a complete drop-in replacement for Square D Type S melting alloy, bimetallic, and Y500 overload relays **only**.

© 2019 Schneider Electric
All Rights Reserved
11/20/2019

Courtesy of Steven Engineering, Inc - (800) 258-9200 - sales@steveneng.com - www.stevenengineering.com

Approximate Dimensions

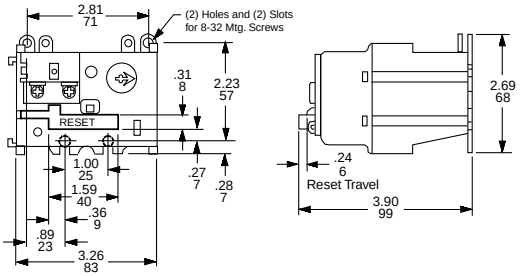

NEMA Size 00B, 00C, 0, and 1 Devices

NOTE: Sizes 00B and 00C are not actual NEMA sizes. These designations are used to differentiate the lower FLA of these devices from the NEMA Size 00 Motor Logic solid-state overload relay.

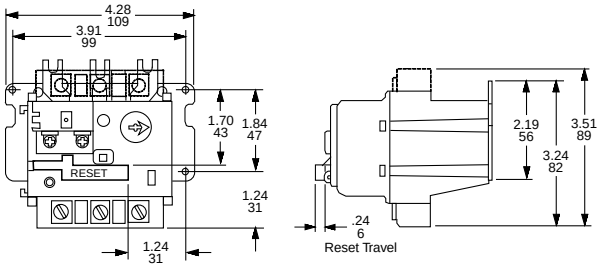

Size 2 Devices

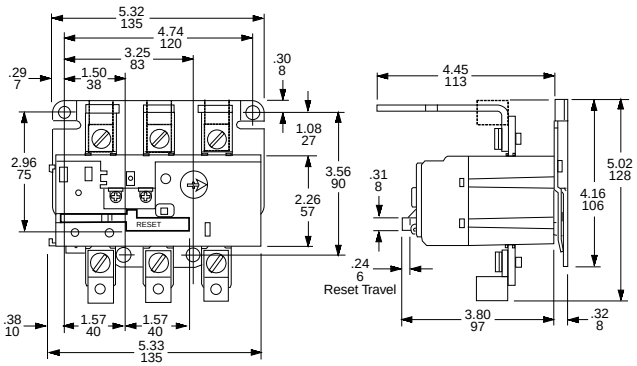

Size 3 Devices

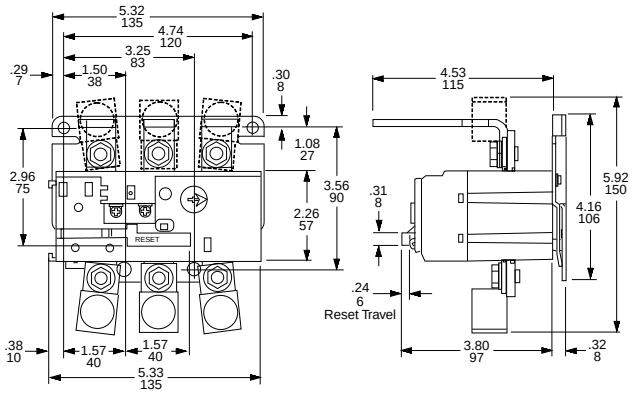

Size 4 Devices

Note: The dimensions are for reference only.

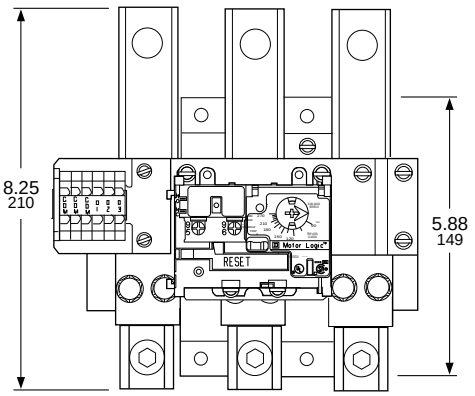

NEMA Size 5 Type S Device

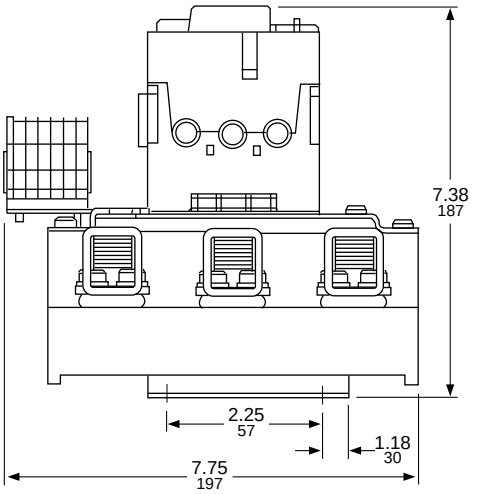

© 2019 Schneider Electric
All Rights Reserved
11/20/2019

Courtesy of Steven Engineering, Inc - (800) 258-9200 - sales@steveneng.com - www.stevenengineering.com

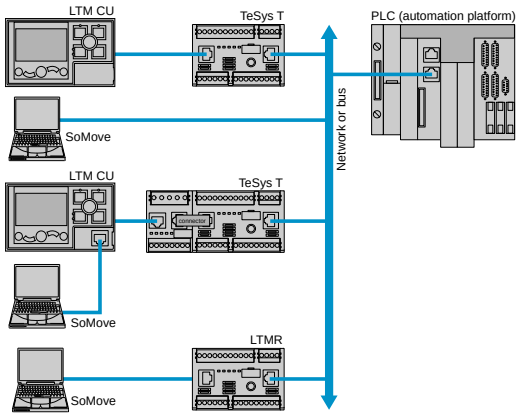

New!

Introduction

TeSys T is a motor management system that provides full motor monitoring, control, and protection when used with short circuit protection and a contactor. TeSys T manages most critical processes while reducing downtime and increasing productivity.

TeSys T is a flexible system that integrates seamlessly into your automation system through five major communication protocols. TeSys T predicts what will happen in the process, as it accurately monitors current, voltage, and power over a wide range.

TeSys T is a green motor management system with unique power monitoring capabilities for better energy management. TeSys T carries all appropriate and necessary third party certifications.

To get detailed information about TeSys T, visit our website at www.schneider-electric.us.com.

TeSys T detailed functionalities and possible configuration:

Communication:

TeSys T is a flexible motor management system that supports six major communication protocols: Modbus™, CANopen, DeviceNet™, Profibus™, Ethernet/IP, and Modbus/TCP.

These communication protocols allow the TeSys T controller to integrate seamlessly into your automation systems.

Ethernet/IP and Modbus/TCP provide FDR to enable quick replacement of products and minimize maintenance time.

Protection functions:
- thermal overload
- phase imbalance and phase failure
- thermal motor protection via PTC probes
- phase reversal
- ground fault detection
- long starting times and motor stalling
- automatic load shedding and restarting
- load fluctuations (current, voltage, power)
- variations of Cos j (power factor)

Metering functions:
- Measurements (rms values):
  - current on the 3 phases
  - voltage on the 3 phases (shedding)
  - motor temperature
  - ground fault sensing
- Values calculated:
  - average current
  - frequency
  - Power factor, power, power consumption

Motor control functions:
A motor managed by a TeSys T controller can be controlled:
- locally, using the logic inputs present on the product, or via the human machine interface (HMI)
- remotely, via the network

Motor control modes:
10 predefined motor control modes are incorporated in the controller. Each listed mode is available as 2 or 3 wire control.
- overload mode: monitoring of motors whose control is not managed by the controller
- independent mode: starting of full voltage non-reversing motors
- reverser mode: starting of full voltage reversing motors
- 2-step mode: 2-step starting of motors (star-delta, by autotransformer and by resistor)
- 2-speed mode: 2-speed starting of motors (Dahlander, pole changer)

A custom mode is available to allow the user to create a specific motor control mode that is not predefined in the controller.
Custom Logic has the basic functions of a small programmable logic controller (PLC). Programming can be done in Structured Text mode or in Block Diagrams through SoMove V2.2 software. To ensure consistency, the same software used to commission the TeSys T controller is used for Custom Logic programming.

Statistical and diagnostic functions:
- history of the last five detected faults
- motor statistics
- controller operations
- warning of pending faults

Table 16.286: Standards and Certifications

Product Type	LTMR Controllers	LTMEV40 Expansion Modules
Conforming to standards	IEC/EN 60947-4-1, UL 508, UL E164353 NKCR, CSA 22-2 n°14, CSA LR43364 Class 3211 03, IACS E10	
Product certifications	UL, CSA, BV, LROS, DNV, GL, RINA, ABS, RMRos, NOM, CCC, C-TIC'K, ATEX, GOST, KERI	

Possible Configurations:

TeSys T controller is a flexible motor management system using SoMove V2.2 commissioning tool. PowerSuite is the configuration software for the TeSys T controllers. See page 16-106 for details.

TeSys T is a motor management system that provides full motor monitoring, control, and protection when used with short circuit protection and a contactor. TeSys T manages most critical processes while reducing downtime and increasing productivity.

TeSys T is a flexible system that integrates seamlessly into your automation system through five major communication protocols. TeSys T predicts what will happen in the process, as it accurately monitors current, voltage, and power over a wide range.

TeSys T is a green motor management system with unique power monitoring capabilities for better energy management.

TeSys T carries all appropriate and necessary third party certifications.

To get detailed information about TeSys T, visit our website at www.schneider-electric.us.com.

© 2019 Schneider Electric
All Rights Reserved
11/20/2019

Courtesy of Steven Engineering, Inc - (800) 258-9200 - sales@steveneng.com - www.stevenengineering.com

New!

LTMR Controller

LTMR27EBD

Table 16.287: Controllers

Setting Range (A)	Control Voltage (V)	Current Range (A)	Catalog Number
Modbus™ Protocol			
8	24 Vdc	0.4–8	LTMR08MBD
	100–240 Vac	0.4–8	LTMR08MFM
27	24 Vdc	1.35–27	LTMR27MBD
	100–240 Vac	1.35–27	LTMR27MFM
100	24 Vdc	5–100	LTMR100MBD
	100–240 Vac	5–100	LTMR100MFM
Ethernet TCP/IP Communication (Protocols: Ethernet/IP and Modbus/TCP)			
8	24 Vdc	0.4–8	LTMR08EBD
	100–240 Vac	0.4–8	LTMR08EFM
27	24 Vdc	1.35–27	LTMR27EBD
	100–240 Vac	1.35–27	LTMR27EFM
100	24 Vdc	5–100	LTMR100EBD
	100–240 Vac	5–100	LTMR100EFM
CANopen Protocol			
8	24 Vdc	0.4–8	LTMR08CBD
	100–240 Vac	0.4–8	LTMR08CFM
27	24 Vdc	1.35–27	LTMR27CBD
	100–240 Vac	1.35–27	LTMR27CFM
100	24 Vdc	5–100	LTMR100CBD
	100–240 Vac	5–100	LTMR100CFM
DeviceNet™ Protocol			
8	24 Vdc	0.4–8	LTMR08DBD
	100–240 Vac	0.4–8	LTMR08DFM
27	24 Vdc	1.35–27	LTMR27DBD
	100–240 Vac	1.35–27	LTMR27DFM
100	24 Vdc	5–100	LTMR100DBD
	100–240 Vac	5–100	LTMR100DFM
Probibus™ DP Protocol			
8	24 Vdc	0.4–8	LTMR08PBD
	100–240 Vac	0.4–8	LTMR08PFM
27	24 Vdc	1.35–27	LTMR27PBD
	100–240 Vac	1.35–27	LTMR27PFM
100	24 Vdc	5–100	LTMR100PBD
	100–240 Vac	5–100	LTMR100PFM

The controller is the central component in the motor management system. It manages the basic functions such as:

- measurement of 3-phase current via integral current transformers from 0.4 to 100 A (up to 810 A by external current transformers)
- measurement of ground current internally or external ground sensors
- measurement of motor temperature
- inputs and outputs for the various motor control modes, detected fault management, and other functions

Characteristics

As standard, the controller manages the following:

Control Modes

- overload mode
- independent mode
- reverser mode
- 2-speed mode
- 2-step mode
- Custom mode

Inputs/Outputs

- 6 discrete logic inputs
- 3 relay logic outputs (1 N.O. contact each)
- 1 relay output for detected fault signaling (1 N.O. + 1 N.C.) overload relay

Measurements

- connection for a thermistor probe
- connections for a ground sensor

© 2019 Schneider Electric
All Rights Reserved
11/20/2019

Courtesy of Steven Engineering, Inc - (800) 258-9200 - sales@steveneng.com - www.stevenengineering.com

New!

LTMEV40FM

Table 16.288: Expansion Module

Input Control Voltage	Number of Inputs	Supply to the Electronics	Catalog Number
24 Vdc	4	via the LTMR controller	LTMEV40BD
100–240 Vac	4		LTMEV40FM

LTM9KCU
(Holder Only)

LTMCU

Magelis Display

Table 16.289: HMI Modules and Software

Description	Supply Voltage	Catalog Number
Operator Control unit	via the LTMR controller	LTMCU
Holder for LTMCU (with magnetic back)	—	LTM9KCU
Magelis compact display	24 Vdc	XBTN410
Configuration software Windows 99, 2000, XP	—	VJDSNDTMSV13M

Components

LTME Expansion Module

The expansion module adds the following functionalities to the TeSys T controller:

- voltage measurement between phases up to 690 V nominal
- 4 additional inputs

Inputs

- 4 discrete logic inputs (isolated)
- 2 types of power for the inputs: 24 Vdc and 100 to 240 Vac
- A 24 Vdc LTMR controller can be assembled with a 240 Vac expansion module and vice versa

The LTMVE must be connected to the LTMR controller by a connecting cable.

HMI—Human Machine Interface

Depending on the application, two types of HMI can be used with the motor management system.

- The LTMCU operator control unit:
  - Control/monitoring of a 1 to 1 LTMR controller
- A Magelis XBTN410 terminal
  - Control/monitoring of 1 to 8 LTMR controllers

LTMCU Compact Display

- Configure the parameters
- Display information
- Monitor the alarms and detected faults
- Local control of the motor via the local control interface (keys can be customized)
- Three different languages can be loaded into the LTMCU controller at the same time: English, French, Spanish are the defaults.

A language download utility (LangTool), together with all the other languages, are available on the website www.schneider-electric.com.

This tool allows the languages present in the LTMCU control until to be adapted.

The LTMCU HMI control unit has an additional front panel RJ45 port, protected by a flexible cover.

Magelis™ Display

Two applications have been predefined for the TeSys T controller. Depending on the application loaded, the HMI terminal makes it possible to:

- Configure and monitor a motor starter (LTM_1T1_V1.dop)
- Monitor and modify certain parameters up to 8 motor starters (LTM_1T8_X_V1.dop)

Vijeo Designer programming software is needed for loading applications into the XBT HMI terminal.

© 2019 Schneider Electric
All Rights Reserved
11/20/2019

Courtesy of Steven Engineering, Inc - (800) 258-9200 - sales@steveneng.com - www.stevenengineering.com

LT6CT4001

DA1TT●●

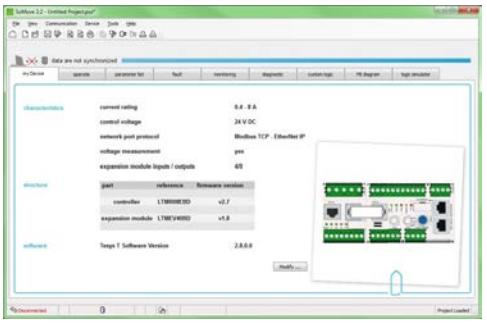

New!

Components

Table 16.290: Current Transformers

Current Transformer Ratio [1]	Catalog Number
100:1	LT6CT1001
200:1	LT6CT2001
400:1	LT6CT4001
800:1	LT6CT8001

Table 16.291: Ground Fault Sensors

Rated Operational Current Ie (A)	Internal Toroid Ø (mm)	Catalog Number
Closed Toroids, Type A		
65	30	50437
85	50	50438
160	80	50439
250	120	50440
400	200	50441
630	300	50442
Split Toroids, Type QA		
85	46	50485
250	110	50486

NOTE: Dimensional drawings are in catalog DIA1ED2061002EN-US.

Table 16.292: PTC Thermistor Probes [2]

Description	Nominal Operating Temperature (NOT) °C	Color	Catalog Number [3]
Triple Probes	90	Green/green	DA1TT090
	110	Brown/brown	DA1TT110
	120	Gray/gray	DA1TT120
	130	Blue/blue	DA1TT130
	140	White/blue	DA1TT140
	150	Black/black	DA1TT150
	160	Blue/red	DA1TT160
	170	White/green	DA1TT170

Configuration with SoMove Software

The TeSys T configurator is incorporated in the SoMove software application, versions 2.2 and higher.

SoMove software allows configuration, commissioning and maintenance of motor starters protected by a TeSys T controller.

A library containing predefined motor control mode functions is available in order to:

- allow standardization
- avoid errors
- reduce motor starter setup times

By using logic functions, a custom mode makes it possible to:

- easily adapt these predefined motor control mode functions to the specific needs of your applications
- create new functions

The functions thus defined can be saved and used to build your function library for future applications.

To create special functions, a logic editor is incorporated in the configurator and allows a choice of 2 programming languages:

- function block
- structured text

Table 16.293: Configuration Tools

Description	Composition	Catalog Number
Connection kit for PC serial port for Modbus™ PLC multidrop connection	1 x 3 m length cable with two RJ45 connectors 1 RS232/RS485 converter with one 9-pin female SUB-D connector and one RJ45 connector.	VW3A8106
USB serial port adapter [4] for connecting a TeSys T controller to your PC	1 USB / serial port adapter [4]	TSXCUSB485
USB serial port cable for connecting a TeSys T controller to your PC	1 USB / serial port cable	TCSMCNAM3M002P

TeSys T and SMS PowerLogic:

TeSys T is integrated in PowerLogic SMS Version 4.0. and will address energy management needs by fully utilizing the TeSys T power/energy management features. For more information on PowerLogic products, see Power Monitor Control Section 4.

[1] For use with LTMR08●● controllers. Three current transformers are required for 3-phase applications.
[2] PTC: Positive Temperature Coefficient.
[3] Sold in lots of 10.
[4] Modbus RS–485 cable required, not included.

© 2019 Schneider Electric
All Rights Reserved
11/20/2019

Courtesy of Steven Engineering, Inc - (800) 258-9200 - sales@steveneng.com - www.stevenengineering.com

8536SCO3V02H626

New!

Accessories

Table 16.294: Connection Accessories

Description		Length m (ft)	Catalog Number
For Ethernet TCP/IP connection			
Shielded twisted pair cables, UL and CA 22.1 approved			
Cables fitted with 2 x RJ45 connectors for connection to terminal equipment	Straight	2 (7)	490NTW00002U
		5 (16)	490NTW00005U
		12 (39)	490NTW00012U
		40 (131)	490NTW00040U
		80 (263)	490NTW00080U
For Modbus PLC connection			
Cables fitted with 2 x RJ45 connectors		0.3 (1)	VW3A8306R03
		1 (3)	VW3A8306R10
		3 (10)	VW3A8306R30
T-junctions		0.3 (1)	VW3A8306TF03
		1 (3)	VW3A8306TF10
RS485 line terminator		—	VW3A8306R
For CANopen connection			
Cables		50 (164)	TSXCANCA50
		100 (328)	TSXCANCA100
		300 (984)	TSXCANCA300
IP20 connectors SUB-D 9-pin female Line end adapter switch	Elbowed (90°)	—	TSXCANKCDF90T
	Straight	—	TSXCANKCDF180T
	Elbowed (90°) SUB-D 9-pin connector for connection to PC or diagnostic tool	—	TSXCANKCDF90TP
For DeviceNet connection			
Cables		50 (164)	TSXCANCA50
		100 (328)	TSXCANCA100
		300 (984)	TSXCANCA300
For Profibus DP connection			
Cables		100 (328)	TSXPBSCA100
		400 (1313)	TSXPBSCA400
Connectors	With line terminator	—	490NAD91103
	Without line terminator	—	490NAD91104
	With line terminator and terminal port	—	490NAD91105

Table 16.295: Connecting Cables

Description	Number and type of connectors	Length m (ft)	Catalog Number
LTMCU control unit	2 x RJ45	1 (3)	VW3A1104R10
		3 (10)	VW3A1104R30
		5 (16)	VW3A1104R50
XBTN410	SUB-D 25-pin female to RJ45	2.5 (8)	XBTZ938
LTME expansion module	2 x RJ45	0.04 (0.13)	LTMCC004
		0.3 (1)	LU9R03
		1 (3)	LU9R10
180 degree Ethernet external connector	1 x RJ45	–	LTM9CE180T

Table 16.296: Marking Accessories

Description	Composition	Sold in lots of	Catalog Number
Clip-in markers (maximum of 5 per unit)	Strips of 10 identical numbers (0 to 9)	25	AB1R● *[5]*
	Strips of 10 identical capital letters (A to Z)	25	AB1G● *[5]*

[5] When ordering, replace the ● in the catalog number with the number or letter required.

© 2019 Schneider Electric
All Rights Reserved
11/20/2019

Courtesy of Steven Engineering, Inc - (800) 258-9200 - sales@steveneng.com - www.stevenengineering.com

Dimensions (mm)

Table 16.297: LTMR•• controllers

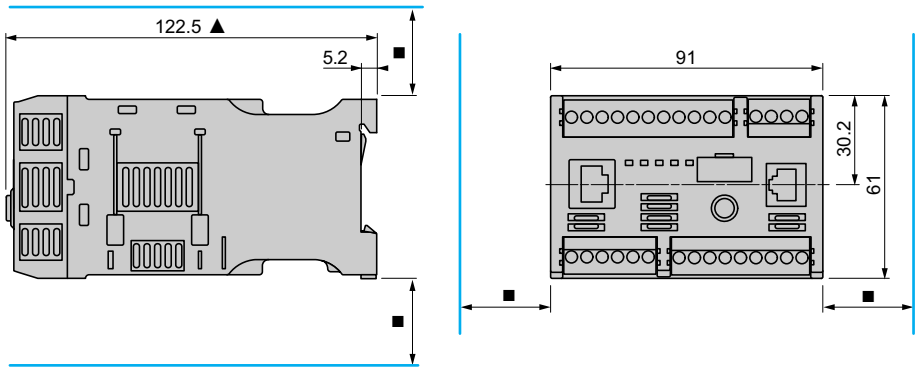

Table 16.298: LTMEV40•• expansion modules

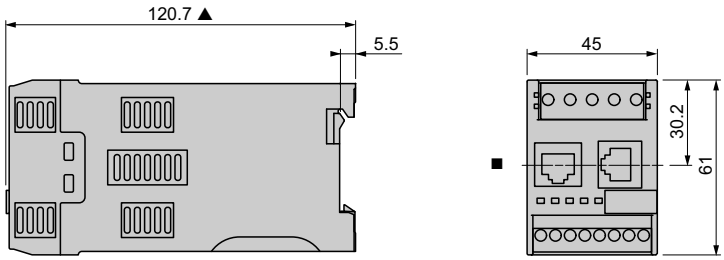

■ Leave a gap around the device of: 9 mm at 45 °C, 9–40 mm from 45–50 °C, 40 mm at 60 °C.

▲ 140 mm with an RJ45 connector for connection to an expansion module and a network; 166 mm with a Profibus DP/CANopen connector.

Table 16.299: LTMCU operator control unit

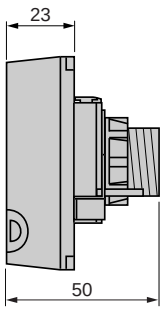

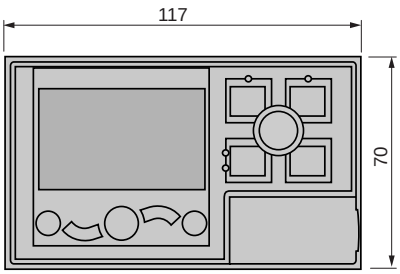

Panel mounting, cut-out

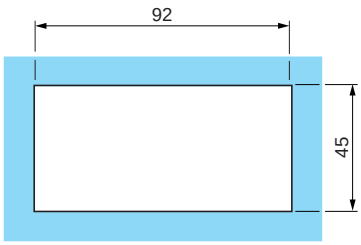

Current Transformers
LT6CT

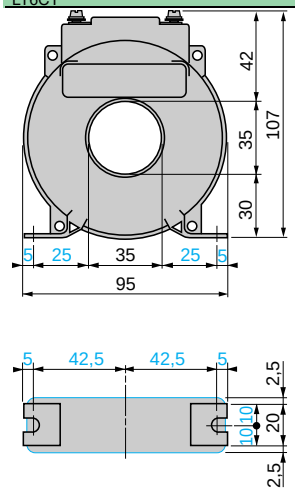

HMI Terminal
XBTN410

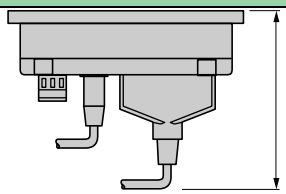

58 mm with SUB-D 25-pin elbowed cable XBTZ9680 for Twido®, TSX Micro™ and Premium™ PLCs or XBTZ998 for Advantys™ STB distributed I/O system.

104 mm with SUB-D 25-pin cable XBTZ68/Z9681 for Twido®, TSX Micro™ and Premium™ PLCs

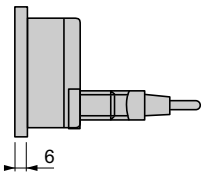

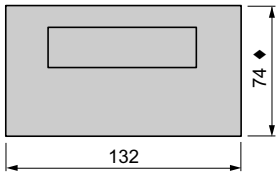

♦ **104 mm** with mounting clips (provided with the product).

© 2019 Schneider Electric
All Rights Reserved
11/20/2019

Courtesy of Steven Engineering, Inc - (800) 258-9200 - sales@steveneng.com - www.stevenengineering.com

New!

Adapted Bimetallic or Solid-State Overload Relay Mounting Bracket Adapter (NEMA Sizes 00–1)

New!

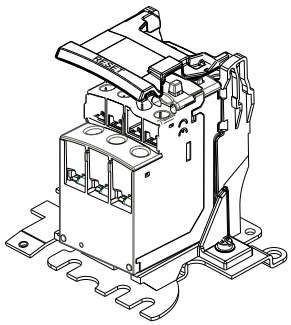

Stand-Alone Mounting Bracket (Mounted to the Overload Relay)

The adapted bimetallic Type S starter incorporates a mounting bracket for use with a self-contained adjustable bimetallic or solid state overload relay. A separately mounting version of the bracket is also available for use with contactors that do not offer the same terminal configurations as the Type S, or for applications with height restraints that demand mounting next to the contactor rather than directly below as is typical for most starter configurations.

The bimetallic thermal overload relays feature Class 10 or Class 20 protection with automatic and manual (hand) reset and a trip-free mechanism. These overload relays are ambient temperature compensated, and available with or without phase imbalance protection. The component is available as a replacement on a starter or as a separately mounted overload relay adapter. The overload relay (LRD or LR3D) can be purchased separately and field installed at a future date.

The solid-state overload relays feature Class 5, 10, 20 or 30 protection (dip switch selectable) with automatic and manual (hand) reset and a trip-free mechanism. These overload relays are ambient-temperature compensated and can be wired for single-phase applications (must use the three-pole unit). The component is available as a replacement on a starter or as a separately mounted overload relay adapter. The overload relay (LR9D) can be purchased separately and field installed at a future date. If using the LR9D with a single-phase motor, the three-pole adapter must be purchased to accommodate looping of the motor leads.

For more information, see Table 16.325.

NOTE: The LRD, LR3D, or LR9D overload relays must be purchased separately.

Table 16.300: Replacement or Retrofit

Description	Sizes	Maximum Full Load Current (A) of Overload Relay	Catalog Number
Two Pole	00, 0, 1	27	SADR751
Three Pole	00, 0, 1	27	SADR75

Table 16.301: Stand Alone

Description	Sizes	Maximum Full Load Current (A) of Overload Relay	Catalog Number
Two Pole	00, 0, 1	27	SAD751
Three Pole	00, 0, 1	27	SAD75

External Reset Mechanisms, Class 9066

Type RB1

Type W1

Type RA2 Series B
Type SC1

Type RA kits provide a convenient external means for resetting overload relays mounted in control enclosures of almost any depth. Designed for use on NEMA 1, 4 or 12 enclosures, they can be used with any Square D open type magnetic starter or Class 9065 overload relay. All kits are individually packaged for easy stocking and include complete installation instructions.

Only a single mounting hole is required in the enclosure door. Each kit contains one or more threaded reset rods, grooved at intervals of 3/4" so they can be cut to the approximate length required without thread damage. Final adjustment is easily made after installation by rotating a plunger and tightening the lock nut. Mechanisms with more than one reset rod include a steel cross bar with mounting holes located at 1/2" intervals, providing a choice of rod locations to suit any application. All steel parts are electrically isolated from the enclosure and the operator.

Type RB kits make it possible to field install external reset mechanisms to Type S combination starters in NEMA 12 enclosures. They may also be used to replace external reset mechanisms on Type S combination starters in NEMA 1, 4 and 12 enclosures.

Table 16.302: Class 9066 External Reset Mechanisms

Where Used	Type of Enclosure	Reset Mechanism Kit	
		Description	Type
OEM Kit for commercial enclosures	NEMA 1, 12	With 1 Rod With 2 Rods With 3 Rods	RA1 RA2 RA3
Replacement on 8538, 8539 starters	NEMA 1, 12	Size 0 and 1 Size 2	RB1 RB2
On commercial enclosures or Type S combination starters	NEMA 4	W1 is a boot only and must be used with RA or RB Kit listed above	W1
Replacement on Class 8536 Type S starters	NEMA 1 with slip-on covers	Size 00, 0 and 1 Size 2 Size 3	SC1 SD1 SE1
Retro-fit kit Class 8940 Pump Panel	NEMA 3R	Reset for use with 9065TJF Series B OLR	RTJF

© 2019 Schneider Electric
All Rights Reserved
11/20/2019

Courtesy of Steven Engineering, Inc - (800) 258-9200 - sales@steveneng.com - www.stevenengineering.com

Type SCW21
NEMA 4X Enclosure

Type SCA11
NEMA 12 Enclosure

Type SCW11
NEMA 4 Enclosure

Type SCH2
NEMA 3R Enclosure

Separate Enclosures, Class 9991

Separate enclosures can be used with open style devices for field assembly of enclosed controls. These enclosures, plus the open style components, are equivalent to a factory-assembled device. Separate enclosures are for use only with the following equipment:

- **NEMA 4 and 12** Class 9991 separate enclosures for Type S devices come standard with closing plates. See Table 16.304 for the specific number of closing plates. For applications requiring enclosures without closing plates, contact your nearest Schneider Electric sales office.
- **NEMA 3R** enclosures for field assembly of equipment for outdoor applications come with three closing plates, a reset mechanism, and a predrilled panel as standard. For a conduit connection to the top of these enclosures, select watertight hubs from the listing on Digest page 3-10 in accordance with applicable code requirements. Square D NEMA 12 enclosures can also be modified for outdoor use. For details, refer to the NEMA 12 enclosure modification information on page page 16-112. **NOTE**: Not for use in high-corrosive outdoor locations or sea coast environments.
- **NEMA 4X** enclosures for Type S devices, Sizes 0–2 and 30–60 A, come standard without closing plates. Cover mounted control units for NEMA 4X separate enclosures are available as a factory modification only.

When closing plates are removed from NEMA 4, 12, and 3R enclosure covers, the openings can be used for easy installation of Class 9001 Type K or SK cover-mounted control units. Convenient Class 9999 modification kits containing Class 9001 Type K control kits can be found on page page 16-126.

Table 16.303: How to Order

To Order Specify:	Catalog Number	
	Class	Type
• Class Number • Type Number	9991	SCW11

Table 16.304: Selection, Class 9991

For Use With		Enclosure Classification						
		NEMA Size or Ampere Rating	NEMA 4X Watertight, Dusttight and Corrosion-Resistant Glass-Polyester	NEMA 4 [1] Watertight and Dusttight Stainless Steel		NEMA 12/3R Dusttight and Driptight		NEMA 3R Rainproof, Sleet Resistant, Outdoor Use
Class	Types (All Pole Arrangements)		Type	Type	Number of Closing Plates	Type	Number of Closing Plates	Type
Manual Starters								
2510 [2]	MBO, MCO	MO M1 M1P	MW1	MW11	—	MA1	—	—
Magnetic Contactors								
8502 [3]	SAO, SBO, SCO	00, 0, 1	SCW20	SCW11	2	SCA11 [4]	2	SCH2
	SDO	2	SDW20	SDW11	2	SDA11 [4]	2	SDH1
	SEO	3	—	SEW11	3	SEA11 [4]	3	SEH1
	SFO	4	—	SFW11	3	SFA11 [4]	3	SFH1
Magnetic Starters								
8536	SAO, SBO, SCO	00, 0, 1	SCW21	SCW11	2	SCA11 [4]	2	SCH2
	SDO	2	SDW21	SDW11	2	SDA11 [4]	2	SDH1
	SEO	3	—	SEW11 [5]	3	SEA11 [4]	3	SEH1
	SFO	4	—	SFW11 [5]	3	SFA11 [4]	3	SFH1
Lighting Contactors, Non-Combination, Electrically and Mechanically Held								
8903 [3]	LO, LXO	20 A	SDW20	SDW11	2	SDA11 [4]	2	SDH1
	SMO	30 A	SCW20 [6]	SCW11	2	SCA11[4]	2	SCH2
	SPO	60 A	SCW20 [6]	SDW11	2	SDA11 [4]	2	SDH1
	SQO	100 A	—	SEW11 [5]	3	SEA11 [4]	3	SEH1
	SVO	200 A	—	—	—	—	—	SFH1
Reversing and Two-Speed, Horizontally Arranged Contactors and Starters								
8702 [3] 8736	SBO, SCO SDO	0, 1 2	—	SCW12 SDW12	3	SCA12 [4] SDA12 [4]	3	— —
8810	SBO & SCO	0, 1	—	SCW13	3	SCA13 [4]	3	—

[1] The standard cabinet has a brushed finish.
[2] Type MBO, Size MO only.
[3] For contactors, replace the reset assembly with a proper closing plate: for NEMA 4, use Class 9001 Type K52; for NEMA 3R and 12, use Class 9001 Type K51. (Class 9991 Types SCW20 and SDW20 are designed for contactors only, so reset closing plates are not required.)
[4] NEMA 12 enclosures can be field modified for outdoor non-corrosive and non–service entrance rated applications. See page 16-112 for more information.
[5] This enclosure is suitable only for starters with a **melting alloy**, **solid-state**, or **adapted bimetallic** overload relay.
[6] For electrically held devices only.

© 2019 Schneider Electric
All Rights Reserved
11/20/2019

Courtesy of Steven Engineering, Inc - (800) 258-9200 - sales@steveneng.com - www.stevenengineering.com

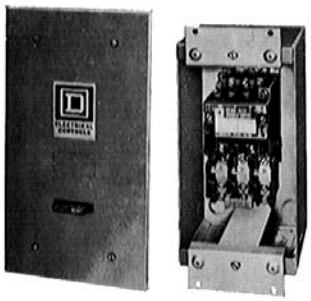

Flush Mounting Starter with Pull Box and Mounting Strap and Plaster Adjustment Feature

Type SCG8
NEMA 1 Enclosure

Flush Mounting, General Purpose Separate Enclosures

Flush mounting, general purpose separate enclosures for Type S Sizes 0–2, 30–60 A are provided with knock-outs in the cover for field assembly of one Class 9999 push button or selector switch kit and one Class 9999 pilot light kit. (Refer to Class 9999 for selection.) For Type S Size 3, 100 A, three closing plates are provided for installation of Class 9001 Type K oiltight control units. For enclosure dimensions, refer to Table 16.309.

Table 16.305: Flush Mounting Selection Table

For Use With		NEMA Size or Ampere Rating	Flush Mounting General Purpose (Components)			
			Flush Plates		Mounting Strap	Pull Box
Class	Types (All Pole Arrangements)		Standard	Stainless Steel *[7]*		
			Type	Type	Type	Type
2510	MBO, MCO	MO M1 M1P	MF1	(with pullbox and plaster adjustment)		
			MF2	(without pullbox but with mounting strap)		
Magnetic Contactors						
8502*[8]*	SBO, SCO	0, 1	SCF11	SCF12	SCF2	SCF1
	SDO	2	SDF11	SDF12	SDF2	SDF1
	SEO	3	SEF11	(Enclosure Complete)		
Magnetic Starters						
8536	SBO, SCO	0, 1	SCF11	SCF12	SCF2	SCF1
	SDO	2	SDF11	SDF12	SDF2	SDF1
Lighting Contactors Non-Combination Electrically and Mechanically Held						
8903*[8]*	LO, LXO	20 A	SDF13	—	SDF2	SDF1
	SMO 1–4	30 A	SCF11	—	SCF2	SCF1
	SMO 10–13	30 A	SCF13	—	SCF2	SCF1
	SPO 1–4	60 A	SDF11	—	SDF2	SDF1
	SPO 10–13	60 A	SDF13	—	SDF2	SDF1
	SQO 1–13	100 A	SEF11	(Enclosure Complete)		

NEMA 1 General Purpose separate enclosures in Table 16.306, when used with open style components, are equivalent to a standard factory assembled control device.

Table 16.306: NEMA 1 Selection Table

For Use With			NEMA 1 General Purpose Enclosure Class 9991
Class	Type	No. of Poles	Type
2510	F and K	All	EN1
	M–Sizes M0 and M1	All	MG1
	M–Size M1P	All	MG2
8501	CO	All	UE1
	XO	2–12, 2–4 **with** attachments	UE7
	XDO	2–8 **without** attachments	
8502	SAO, SBO, SCO	2–4	SCG7
	SDO	2–4	SDG7
	SEO	2–4	SEG7
	SFO	2–4	SFG8
8536	SAO, SBO, SCO	2–4	SCG8
	SDO	2–4	SDG8
	SEO	2–4	SEG8 *[8] [9]*
	SFO	2–4	SFG8 *[8] [9]*
	SGO	3	SGG8 *[10] [9]*
8702, 8736	SAO, SBO, SCO	All	SCG9 *[11]*
	SDO	All	SDG9 *[11]*
8903	LO, LXO	All	LXG1 *[12]*
	SMO	All	SCG7 *[13]*
	SPO	All	SDG7 *[13]*
	SQO	All	SFG8
	SVO	All	SFG4
8910	DP	1–2	DPG1
	DPA12, 13, 22, 23, 32, 33, 42, 43	2–3	DPG1
	DPA14, 24, 34, 44, 52, 53	2–4	DPG2
	DPA62, 63	2–3	DPG3
	DPA72, 73, 92, 93	2–3	DPG4
	H, J, K, L & M	All	UE6
8911	DPSO13, 23, 33, 43	3	DPSG1
	DPSO53	3	DPSG2
	DPSO63, 73, 93	3	SEG8
9050	AO (Single Head)	All	UE6
	HO	All	UE6
9070	EO51, EO61, EO71, K750, K1000	—	SDG4
	EO2, EO3, EO4, EO15, EO16 EO18, EO19, T75, T100, T150, T200, T250, T300, T350, T500	—	LG1
	EO1, EO17, T50	—	UE7

[7] The standard cabinet has a brushed finish.
[8] For contactors, replace the reset assembly with a proper closing plate. For flush mounting, use Class 9999 Type SG2—except for Class 9991 Type SDF11 enclosures, which require a Class 9001 Type K51 or K11 closing plate. (Class 9991 Types SEF11 and LF1 are designed for contactors only, so reset closing plates are not required.)
[9] This enclosure is suitable only for starters with a **melting alloy**, **solid-state**, or **adapted bimetallic** overload relay.
[10] Series B starter enclosure.
[11] For horizontally arranged Class 8702 contactors, replace the reset assembly with a Class 9001 Type K51 closing plate.
[12] If cover mounted control units are required, select an oversized enclosure listed in Table 16.307.
[13] For electrically held contactors only. See Table 16.307 for mechanically held contactors.

© 2019 Schneider Electric
All Rights Reserved
11/20/2019

Courtesy of Steven Engineering, Inc - (800) 258-9200 - sales@steveneng.com - www.stevenengineering.com

Type SCW4
NEMA 4 Enclosure

Type SCG1
With Starter, Transformer and Fuse Block Installed

Type SCA11
NEMA 12 Enclosure

Enclosure Selection

NEMA 1, 4, and Oversized Enclosures For the Addition of a Control Circuit Transformer

The Class 9991 enclosures listed in Table 16.307 accept an open type Class 8502 or 8536 Type S, NEMA Size 0, 1, 1P, or 2 contactor or starter along with a fused control circuit transformer (Form F4T) to allow field assembly of enclosed controllers. In the cover of the Class 9991 Type SCG1 enclosure, knock-outs are provided for field addition of Class 9999 cover-mounted control units. All other Class 8502 & 8536 enclosures include a panel with space and drilling for an open-type device and a fused control circuit transformer. In addition, three closing plates are included in each cover for easy installation of Class 9001 Type K or SK control units.

Oversized enclosures for open type Class 8903 Type L & LX, 20 A and Type S, 30 and 60 A electrically and mechanically held lighting contactors include a panel with space and drilling for an open- type contactor and fused control circuit transformer (Form F4T) and/or an auxiliary relay for use with single pole pilot devices (Form R6). When an auxiliary relay is required, use a Class 8501 Type XO11 relay. Three closing plates are provided as standard for easy installation of Class 9001 Type K or SK control units.
Note: A Class 9991 Type SCG1 NEMA 1 separate enclosure can also be used for Class 8903 Type SMO, 30 A electrically held lighting contactor if Form F4T (control transformer), with or without cover control units is required.

NEMA 12/3R Enclosures Modified for Outdoor Applications (not to be used in salt air or corrosive environments)

Field Modifications for NEMA 3 dusttight, raintight and sleet resistant outdoor applications are as follows: Watertight conduit hubs or equivalent provision for watertight connection at the conduit entrance shall be used.

Field Modifications for NEMA 3R rainproof and sleet resistant outdoor applications are as follows:

- Watertight conduit hubs or equivalent provision for watertight connection at the conduit entrance, when the conduit enters at a level higher than the lowest live part, shall be used.
- Drain holes of 1/8 inch diameter shall be added to the bottom of the enclosure.

Class 9001 Type K oiltight/watertight control units can be easily installed in NEMAs 4, 12, and oversized NEMA 1 separate enclosures provided with closing plates. When installing control units simply remove the closing plates and install the proper Class 9001 Type K components. Convenient control unit kits complete with assembled and pre-wired operators for quick installation are available as Class 9999 user modification kits. See Table 16.308 for contents of each control unit kit. Class 9001 Type SK NEMA 4X corrosion resistant control units may be used as an alternate.

Table 16.307: NEMA 1, 4, and 12 Enclosures

For Use With				Class 9991 Enclosure			Recommended Class 9070 *[14]* Transformer Selection					Fuse Block
Class	Type	NEMA Size or Ampere Rating	No. of Poles	General Purpose NEMA 1	Watertight and Dusttight Stainless Steel NEMA 4 *[15]*	Dusttight and Driptight Industrial Use NEMA 12 *[16]*	Standard		Extra Capacity			
				Type	Type	Type	Type	VA	100 VA Type	150 VA Type	300 VA Type	
Magnetic Contactors and Starters *[17]*												
8502, 8536	SAO, SBO, SCO	00, 0, 1	1–3	SCG1	SCW4	SCA4	T50	50 VA	T100 *[18]*	T150 *[18]*	—	Class 9999 Type SFR4
			4–5				T100 *[18]*	100 VA	—	T150 *[18]*	—	
	SDO	2	2–5	SDG4	SDW4	SDA4	T100	100 VA	—	T150	T300	
Lighting Contactors, Non-Combination												
8903	LO, LXO	20 A	All	SDG3	SDW3	SDA3	T50	50 VA	—	—	—	
							T50	50 VA	T100 *[18]*	T150 *[18]*	—	
	SMO *[19]*	30 A	1–3				T100 *[18]*	100 VA	—	T150 *[18]*	—	
			4–5				T100	100 VA	—	T150	T300	
	SPO *[19]*	60 A	2–5									

Table 16.308: Control Unit Selection Table

Class 9999 Type	Control Function	Kit Contents	
		Class and Type	Description
SA3	Start-Stop Push Button	1-9001 KR1B 1-9001 KR1R 1-9001 KN201 1-9001 KN202 2-9001 KA1	Start Operator Stop Operator Start Legend Plate Stop Legend Plate Contact Block
SC8	Hand-Off-Auto Selector Switch	1-9001 KS43B 1-9001 KN260 1-9001 KA1	Selector Operator Switch Hand-Off-Auto Legend Plate Contact Block
SP28R	Pilot Light (120 V)	1-9001 KP1R31	Red Pilot Light

[14] For complete description, see the Class 9070 section. **Note:** The Class 9991 Type SCG1 enclosure comes standard with a Class 9999 Type SF4 fuse block.
[15] The standard cabinet has a brushed finish.
[16] NEMA 12 modified for outdoor use (see NEMA 12/3R Enclosures Modified for Outdoor Applications).
[17] For contactors (Class 8502), a separate closing plate is provided with each enclosure to replace the reset mechanism—with the exception of Class 9991 Type SCG1, which requires a separate reset closing plate: Class 9999 Type SG2.
[18] To mount in an SCG1 enclosure, a Class 9991 Type S1 adapter bracket is also required.
[19] Mechanically held.

© 2019 Schneider Electric
All Rights Reserved
11/20/2019

Courtesy of Steven Engineering, Inc - (800) 258-9200 - sales@steveneng.com - www.stevenengineering.com

NEMA 1 Enclosures

NOTE: These dimensions are for reference only. If you need precise measurements, contact the Customer Care Center at 1-888-778-2733.

Table 16.309: NEMA 1—General Purpose Enclosures (Standard)

Class 9991 Type	For Use With				Dimensions (inches/millimeters)														Weight (lb)
	Class	Type	Size	No. of Poles	Fig. No.	Mounting Screws (in.)	A	B	C	D	E	F	G	H	I	J	K	L	
LXG1	8903	LO , LXO	20 A	2–12	1	—	7.81 198	12.69 322	6.03 153	—	1.09 28	10.50 267	1.09 28	1.09 28	5.63 143	5.75 146	1.09 28	5.63 143	8
DPG1	8910	DP DPA	20–40 A	1–2 1–3	1	(4) #10	4.85 123	8.5 216	4.03 102	2.42 62	.109 3	5.75 146	.531 13	.92 23	3.00 76	3.75 95	—	—	2
SCG7	8903	SMO (E.H.)	30 A	All	1	(3) #10	6.00 152	10.00 254	5.28 134	3.00 76	.88 22	8.13 206	1.00 25	.94 24	4.13 105	5.00 127	—	—	4
	8502	SAO	00	2–3															
		SBO SCO	0 1	All															
SCG8	8536	SAO	00	2–3					5.56 141										
		SBO SCO	0 1	All															
DPG2	8910	DPA	—	—															
DPSG1	8911	DPS	—	—															
SDG7	8903	SPO (E.H.)	60 A	2–12	1	(4) 1/4	7.81 198	12.69 322	6.03 153	—	1.09 28	10.50 267	1.09 28	1.09 28	5.63 143	5.75 146	1.09 28	5.63 143	8
	8502	SDO	2	All															
SDG8	8536	SDO	2	All					6.31 160										
DPG3	8910	DPA	—	—															
DPSG2	8911	DPS	—	—															
SEG7	8502	SEO	3	All	1	(4) 3/8	11.44 291	21.81 554	8.00 203	—	1.53 39	18.75 476	1.53 39	1.53 39	8.38 213	7.75 197	1.53 39	8.38 213	23
SEG8	8536	SEO	3	All															
	8911	DPSG63 to 93	—	All															
DPG4	8910	DPA	—	—					8.38 213										
SFG8	8502	SFO	4	All	2	(4) 7/16	11.25 286	25.15 639	8.99 228	8.60 218	1.25 32	1.25 32	22.31 567	1.42 36	.44 11	—	—	—	34
	8536	SFO	4	All															
	8903	SQO (E.H. & M.H.)	100 A	All															
SCG9	8702 *[20]*	SBO, SCO	0 & 1	All	2	(4) 5/16	11.88 302	11.88 302	7.41 188	9.75 248	1.06 27	1.06 27	9.75 248	1.06 27	.31 8	—	—	—	16
	8922	ETBC20, ETBC36	—																
SDG9	8702 *[20]*	SCO	2	All	2	(4) 5/16	14.88 378	14.13 359	7.56 192	12.75 324	1.06 27	1.06 27	12.00 305	1.06 27	.31 8	—	—	—	24
	8922	ETBC60	—																

Table 16.310: NEMA 1—General Purpose Enclosures (Oversize)

Class 9991 Type	For Use With															Weight (lb)
	Class	Type	Size	No. of Poles	Fig. No.	Mounting Screws (in.)	A	B	C	D	E	F	G	H	I	
SDG3	8903	LO , LXO SMO (M.H.) SPO (Form F4T)	20 A 30 A 60 A	All	2	(4) 5/16	14.88 378	14.13 359	7.56 192	12.75 324	1.06 27	1.06 27	12.00 305	1.06 27	.31 8	15
SDG4	8502	SDO (Form F4T)	2	All												21
	8536	SDO (Form F4T)	2	All					7.66 194							
	9070	EO51, EO61, EO71, T750, T1000	—	—					7.56 192							
SCG1	8502	SBO, SCO (Form F4T)	0, 1	All	3	(4) 9/32	6.34 161	15.88 403	5.19 132	4.66 118	.84 21	14.38 365	.75 19	.28 7	.35 9	8
	8536	SBO, SCO (Form F4T)	0, 1	All												
	8903	SMO (E.H.) (Form F4T)	30 A	All												

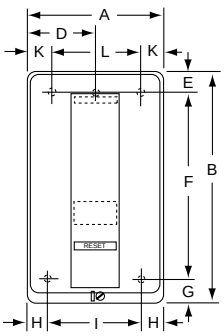

Figure 1

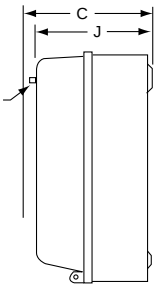

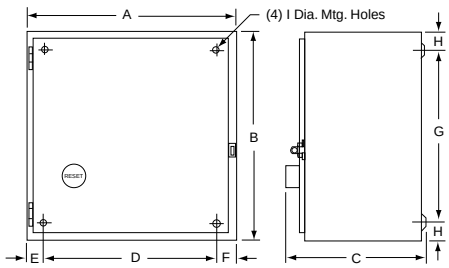

Figure 2

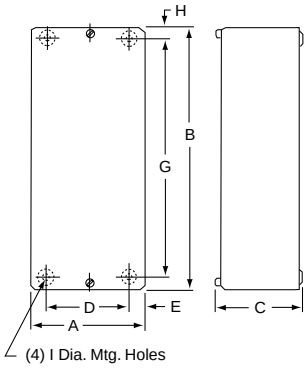

Figure 3

Dimensions: **in.**
mm

[20] The standard enclosure has space for a fused control transformer, **Form FF4T**, on Sizes 0–2.

© 2019 Schneider Electric
All Rights Reserved
11/20/2019

Courtesy of Steven Engineering, Inc - (800) 258-9200 - sales@steveneng.com - www.stevenengineering.com

NEMA 1 and 3R Enclosures

NOTE: These dimensions are for reference only. If you need precise measurements, contact the Customer Care Center at 1-888-778-2733.

Table 16.311: NEMA 1—General Purpose Enclosures

Class 9991 Type	For Use With			Dimensions (See Figure 4)										Weight (lb)
	Class	Type	No. of Poles	A	B	C	D	E	F	G	H	J	L	
UE1	8501	CO	All	3.63 92	5.28 134	3.31 84	1.88 48	3.63 92	1.06 27	1.50 38	1/4 in. *[21]*	1/2–3/4 in.		2
UE6	8910	H, J, K L & M	All	4.91 125	5.75 146	5.53 140	3.50 89	4.38 111	1.56 40	2.00 51	9/32 in.	1/2–3/4 in. 1–1-1/4 in.	1/2–3/4 in.	2
	9050	AO (Single Head)	All											
		HO	All											
UE7	8501	XO	2–12, 2–4 w/ Attachments	4.87 124	7.79 198	7.53 191	3.50 89	6.38 162	1.31 33	1.88 48	#10	1/2–3/4 in.		4
		XDO	2–8											
	9070	EO1, EO17 T25, & T50	—											
LG1	9070	EO2, EO3, EO4, EO15, EO16, EO18, EO19 T75, T100, T150, T200, T250, T300, T350, & T500	—	7.53 191	9.78 248	5.91 150	6.13 156	8.38 213	1.31 33	1.88 48	9/32 in.	1/2–3/4–1 in. *[22]*		10

Table 16.312: NEMA 3R—Rainproof and Sleet-Resistant Enclosures

Class 9991 Type	For Use With				Dimensions (see Figure 5)																		
	Class	Type	Size	No. of Poles	A	B	C	D1	D2	E	F	G1	G2	H1	H2	J	K	L	M	N	P	K.O. X	K.O. Y
SCH2	8502 8536	SBO SCO	0, 1	All	8.83 224	12.30 312	7.12 181	1.39 35	1.44 37	6.00 152	7.50 191	2.61 66	2.19 56	2.08 53	2.62 66	14.28 363	1.37 35	1.37 35	1.88 48	4.38 111	1.83 46	1/2 3/4 1	1/2 3/4 1
	8903	SMO	30 A																				
SDH1	8502 8536	SDO	2	All	9.83 250	16.30 414	8.62 219	1.39 35	1.44 37	7.00 178	11.50 292	2.61 66	2.19 56	2.08 53	2.62 66	16.78 426	1.31 33	1.75 44	2.13 54	4.88 124	1.83 46	1 1-1/4 1-1/2	1/2 3/4
	8903	LO LXO	20 A																				
	8903	SPO	60 A																				
SEH1	8502 8536	SEO	3	All	12.63 321	25.30 643	8.62 219	1.39 35	1.44 37	10.00 254	20.60 523	2.61 66	2.19 56	2.08 53	2.62 66	19.78 502	1.31 33	2.31 59	2.69 68	6.38 162	1.83 46	1 1-1/4 2 2-1/2	1/2 3/4
	8903	SQO	100 A																				
SFH1	8502 8536	SFO	4	All	12.63 321	40.30 1024	9.12 232	1.39 35	1.44 37	10.00 254	35.50 902	2.61 66	2.19 56	2.08 53	2.62 66	20.28 515	1.31 33	2.31 59	2.69 68	6.38 162	1.83 46	1 1-1/4 2 2-1/2	1/2 3/4
	8903	SVO	200 A	2-3																			

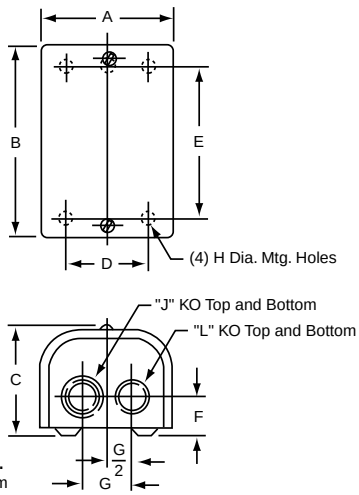

Dimensions: **in.**
mm

Figure 4

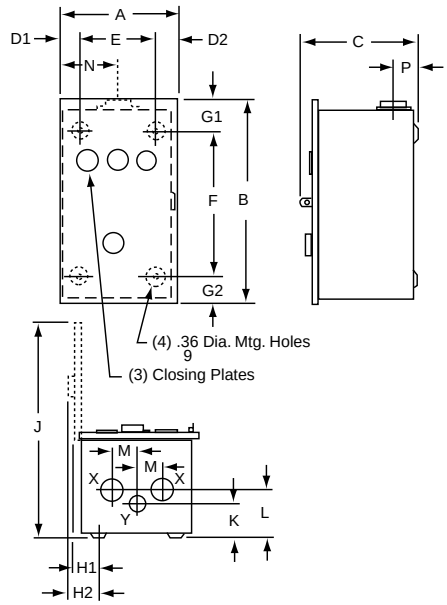

Figure 5

[21] Class 9991 Type UE1 has only 3 of the **H** diameter mounting holes: 2 in the bottom as shown, and 1 centered at the top.
[22] Class 9999 Type LG1 has 3 knockouts, top and bottom.

© 2019 Schneider Electric
All Rights Reserved
11/20/2019

Courtesy of Steven Engineering, Inc - (800) 258-9200 - sales@steveneng.com - www.stevenengineering.com

NEMA 4 and 4X Enclosures

NOTE: These dimensions are for reference only. If you need precise measurements, contact the Customer Care Center at 1-888-778-2733.

Table 16.313: NEMA 4X—Watertight and Corrosion Resistant Enclosures

Class 9991 Type	For Use With				Dimensions (see Figure 6)												Hub Dia.		Weight (lb)
	Class	Type	Size	No. of Poles	A	B	C	D	E	F	G	H	I	J	K	L	Bot. Only W	Top & Bot. X	
SCW20	8903	SMO (E.H.)	30 A	All	6.50 165	6.44 164	12.13 308	.75 19	5.00 127	8.25 210	1.69 43	3.34 85	10.06 256	1.31 33	2.13 54	.31 8	3/4 in.	1 in.	7
	8502	SBO, SCO	0, 1	All															
SCW21	8536	SBO, SCO	0, 1	All															
SDW20	8903	LO, LXO	20 A	All	8.50 216	7.06 179	13.88 352	.75 19	7.00 178	10.50 267	1.69 43	3.91 99	11.94 303	1.63 41	2.38 60	.31 8	3/4 in.	1-1/2 in.	13
	8903	SPO (E.H.)	60 A	All															
	8502	SDO	2	All															
SDW21	8536	SDO	2	All															

Table 16.314: NEMA 4—Watertight Enclosures (Standard)

Class 9991 Type	For Use With				Dimensions (see Figure 6)												Hub Dia.		Weight (lb)
	Class	Type	Size	No. of Poles	A	B	C	D	E	F	G	H	I	J	K	L	Bot. Only W	Top & Bot. X	
SCW11	8903	SMO	30 A	All	6.38 162	7.13 181	13.19 335	1.56 40	3.25 83	12.00 305	.59 15	1.88 48	11.78 299	1.63 41	2.31 59	.31 8	3/4 in.	1 in.	12
	8502	SBO, SCO	0, 1	All															
	8536	SBO, SCO	0, 1	All	6.38 162	7.81 198	13.19 335	1.56 40	3.25 83	12.00 305	.59 15	1.88 48	11.78 299	1.63 41	2.31 59	.31 8			
SDW11	8903	LO, LXO	20 A	All	8.13 206	7.88 200	16.19 411	1.56 40	5.00 127	15.00 381	1.09 28	1.94 49	14.75 375	2.00 51	2.63 67	.31 8	3/4 in.	1-1/2 in.	18
	8903	SPO	60 A	All															
	8502	SDO	2	All															
	8536	SDO	2	All	8.13 206	8.56 217	16.19 411	1.56 40	5.00 127	15.00 381	1.09 28	2.88 73	14.75 375	2.00 51	2.63 67	.31 8			
SEW11	8903	SQO	100 A	All	18.15 461	8.77 223	32.21 818	3.08 78	12.00 305	30.50 775	.86 22	3.67 93	26.71 678	2.58 66	3.19 81	.44 11	3/4 in.	2-1/2 in.	51
	8502	SEO	3	All															
	8536	SEO	3	All	18.15 461	9.58 243	32.21 818	3.08 78	12.00 305	30.50 775	.86 22	4.48 114	26.71 678	2.58 66	3.19 81	.44 11			
SFW11	8536	SFO	4	All															
	8502	SFO	4	All	18.15 461	8.77 223	32.21 818	3.08 78	12.00 305	30.50 775	.86 22	3.67 93	26.71 678	2.58 66	3.19 81	.44 11			

Table 16.315: NEMA 4—Watertight Enclosures (Oversize)

Class 9991 Type	For Use With				Dimensions (see Figure 7)												Hub Dia.		Weight (lb)
	Class	Type	Size	No. of Poles	A	B	C	D	E	F	G	H	I	J	K	L	Bot. Only W	Top & Bot. X	
SCW2	8702 8736	SCO	1	All	12.63 321	7.81 198	14.69 373	2.56 65	7.50 191	13.50 343	.59 15	3.88 98	18.41 468	1.66 42	2.31 59	.31 8	3/4 in.	1 in.	23
SCW3	8810	SBO SCO	0 1	All															19
SCW4	8502 8536	SBO, SCO (Form F4T)	0, 1	All															24
SDW2	8702 8736	SDO	2	All	14.88 378	7.25 184	16.19 411	2.56 65	9.75 248	15.00 381	.38 10	3.88 98	20.88 530	1.72 44	2.63 67	.31 8	3/4 in.	1-1/2 in.	25
SDW3	8903	LO, LXO SMO, SPO (Form F4T)	20 A 30 A 60 A	All															29
SDW4	8502 8536	SDO (Form F4T)	2	All															28

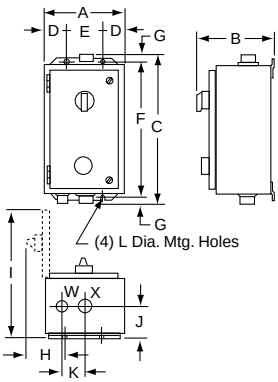

Figure 6

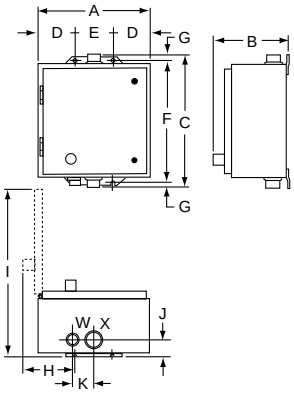

Figure 7

Dimensions: **in.**
mm

© 2019 Schneider Electric
All Rights Reserved
11/20/2019

Courtesy of Steven Engineering, Inc - (800) 258-9200 - sales@steveneng.com - www.stevenengineering.com

NEMA 12/3R and Flush Mounting General Purpose Enclosures

NOTE: These dimensions are for reference only. If you need precise measurements, contact the Customer Care Center at 1-888-778-2733.

Table 16.316: See Figure: NEMA 12/3R—Dusttight and Driptight Enclosures (Standard)

Class 9991 Type	For Use With			Dimensions												Weight (lb)
	Class	Type	Size	No. of Poles	A	B	C	D	E	F	G	H	I	J		
SCA11	8502	SBO, SCO	0, 1	All	6.38 162	8.53 217	12.75 324	1.56 40	3.25 83	12.00 305	.38 10	3.56 90	12.50 318	.31 8		10
	8536	SBO, SCO	0, 1	All												
	8903	SMO	30 A	All												
SDA11	8502	SDO	2	All	8.13 206	9.28 236	16.00 406	1.56 40	5.00 127	15.00 381	.50 13	3.56 90	15.38 391	.31 8		15
	8536	SDO	2	All												
	8903	LO, LXO	20 A	All												
	8903	SPO	60 A	All												
SEA11	8903	SQO	100 A	All	18.15 461	9.24 235	31.50 800	3.08 78	12.0 305	30.50 775	.50 13	3.67 93	26.71 678	.44 11		51
	8502	SEO	3	All												
	8536	SEO	3	All	18.15 461	9.58 243	31.50 800	3.08 78	12.0 305	30.50 775	.50 13	4.48 114	26.71 678	.44 11		
SFA11	8536	SFO	4	All												
	8502	SFO	4	All	18.15 461	9.24 235	31.50 800	3.08 78	12.0 305	30.50 775	.50 13	3.67 93	26.71 678	.44 11		

Table 16.317: See Figure: NEMA 12/3R—Dusttight and Driptight Enclosures (Oversized)

Class 9991 Type	For Use With			Dimensions												Weight (lb)
	Class	Type	Size	No. of Poles	A	B	C	D	E	F	G	H	I	J		
SCA2	8702 8736	SCO	1	All	11.88 302	7.75 197	13.5 343	2.56 65	6.75 171	12.75 324	.38 10	3.66 93	18.13 460	.31 8		17
SCA3	8810	SBO SCO	0 1	All												18
SCA4	8502 8536	SBO, SCO (Form F4T)	0, 1	All												19
SDA2	8702 8736	SDO	2	All	14.88 378	7.88 200	16.00 406	2.56 65	9.75 248	15.00 381	.50 13	3.66 93	21.25 540	.31 8		24
SDA3	8903	LO, LXO SMO, SPO (Form F4T)	20 A 30 A 60 A	All												27
SDA4	8502 8536	SDO (Form F4T)	2	All												27

Table 16.318: See Figure: Flush Mounting General Purpose Enclosures

Class 9991 Type	For Use With			Dimensions									Weight (lb)
	Class	Type	Size	No. of Poles	A	B	C	D	E	F	G	H	
SDF13 (w/SDF1 & SDF2)	8903	LO, LXO	20 A	All	15.19 386	8.94 227	7.63 194	12.88 327	5.44 138	10.94 278	5.13 130	.38 10	17
SCF11 (w/SDF1 & SDF2)	8502	SBO, SCO	0, 1	All	13.44 341	7.19 183	5.88 149	11.13 283	4.75 121	9.19 233	4.50 114	.38 10	10
	8536	SBO, SCO	0, 1	All									
	8903	SMO (E.H.)	30 A	All									
SDF11 (w/SDF1 & SDF2)	8502	SDO	2	All	15.19 386	8.94 227	7.63 194	12.88 327	5.44 138	10.94 278	5.13 130	.38 10	17
	8536	SDO	2	All									
	8903	SPO (E.H.)	60 A	All									
SEF11	8502	SEO	3	All	31.00 787	16.75 425	14.25 362	26.25 667	8.00 203	—	—	.18 5	48
	8903	SQO	100 A	All									

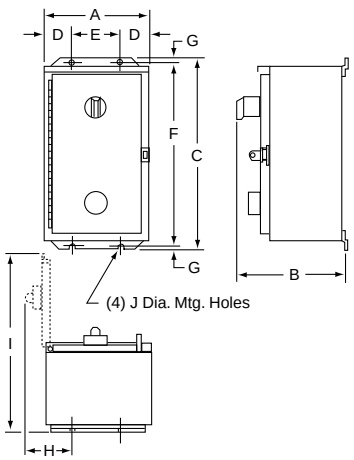

Figure 16.31: NEMA 12/3R—Dusttight and Driptight Enclosures (Standard)

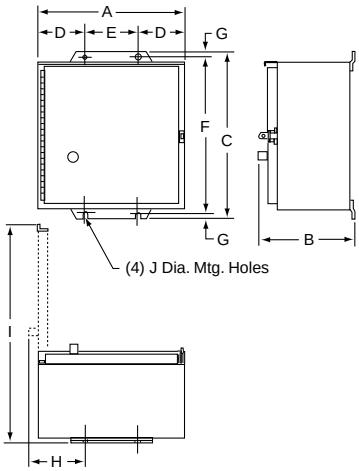

Figure 16.32: NEMA 12/3R—Dusttight and Driptight Enclosures (Oversized)

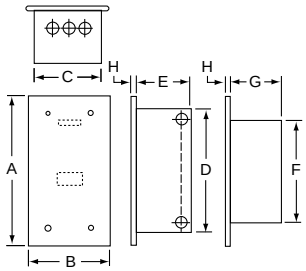

Figure 16.33: Flush Mounting General Purpose Enclosures

© 2019 Schneider Electric
All Rights Reserved
11/20/2019

Courtesy of Steven Engineering, Inc - (800) 258-9200 - sales@steveneng.com - www.stevenengineering.com

Full Voltage Starters

Factory installed modifications are available for the classes of control equipment listed in the respective tables. Kits are also available for many field modifications and normal parts replacement on most control items. Refer to Classes 9998 and 9999 for complete listings.

NOTES

- Standard equipment dimensions and enclosure construction may not apply when certain special features are added. Such cases should be referred to the factory, with complete description, when precise dimensions are required.
- If a UL label is required, consult the Customer Care Center at 1-888-778-2733. Some Forms **are not** UL Listed.

Table 16.319: Full Voltage Starters

	Factory Modifications	Enclosure Type	Form
Pilot Devices in Cover Full Voltage Non-Reversing Controllers Only Classes 8502 8536 8538 8539	**Push Buttons** *[1]*		
	Start-Stop	1 *[2]*, 3R, 4, 4X, 12, 7, & 9	A
	Start-Stop (maintained contact) *[3] [4]*	1 *[2]*, 3R, 4, 4X, 12	A16
	Start-Stop push button and Hand-Off-Auto selector switch *[4]*	1 *[2]*, 3R, 4, 4X, 12	AC
	On-Off *[4]*	1 *[2]*, 3R, 4, 4X, 12	A3
	Single oiltight push button (specify marking) *[4]*	1, 3R, 4, 4X, 12	A11
	Selector Switches		
	Hand-Off-Auto	1 *[2]*, 3R, 4, 4X, 12, 7, & 9	C
	On-Off *[4]*	1 *[2]*, 3R, 4, 4X, 12, 7, & 9	C6
	NON-STANDARD markings for Pilot Devices *[4]*	1, 3R, 4, 12	G12 *[5]*
	Addition of padlock attachment to Class 9001 operators *[4]*	1, 3R, 4, 12	G122
	Pilot Lights (specify color/type) *[6]* See Table 16.320.		
	With Operating Interlock: Add price of each interlock per light	1, 3R, 4, 4X, 12	X *[7]*
Pilot Devices in Cover Full Voltage Reversing and Multi-Speed Controllers Only Classes 8702 8736 8738 8739 8810 8811 8812	**Push Buttons** *[1]*		
	Forward-Reverse-Stop *[4]*	1, 4, 4X, 12, 7, 9	A1
	High-Low-Stop *[4]*	1, 4, 12	A2
	Fast-Off-Slow *[4]*	1, 4, 12	A9
	High-Low push button and Hand-Off-Auto selector *[4]*	1, 4, 12	A10C
	Single oiltight push button (specify marking) *[4]*	1, 4, 4X, 12	A11
	Selector Switches		
	Hand-Off-Auto	1 *[2]*, 4, 4X, 12, 7, & 9	C
	On-Off *[4]*	1 *[2]*, 4, 4X 7, & 9	C6
	High-Off-Low	1, 4, 12	C7
	Forward-Off-Reverse *[4]*	1, 4, 4X, 12, 7, & 9	C14
	High-Low and Hand-Off-Auto *[4]*	1, 4, 12	CC17
	Slow-Fast *[4]*	1, 4, 4X, 12	C19
	Forward-Reverse *[4]*	1, 4, 4X, 12	C20
	High-Low-Off-Auto *[4]*	1, 4, 12	C25
	Non-Standard Markings for Pilot Devices *[4]*	Any	G12 *[5]*
	Pilot Lights *[6]* Available with Operating Interlock	1, 4, 4X, 12	X *[7]*

Table 16.320: Pilot Light Forms

	Standard Form	Push-to-Test Form	LED Form	LED-Push-to-Test Form
Red ON	P1 *[8]*	P21	P51	P42
Red OFF	P71	P81	P91	P43
Red Unwired	P38	P28	P58	P44
Green ON	P72	P82	P92	P45
Green OFF	P2 *[8]*	P22	P52	P46
Green Unwired	P39	P29	P59	P47
Amber	P3	P23	P53	P63
Clear	P4	P24	P54	P64
Yellow	P35	P25	P55	P48
Blue	P36	P26	P56	P66
White	P37	P27	P57	P67
Red LOW—Green HI	P73	P83	P93	P77
Green LOW—Red HI	P74	P84	P94	P78
Red OFF—Green FWD/REV	P75	P85	P95	P79
Green OFF—Red FWD/REV	P76	P86	P96	P80

[1] All push buttons are momentary contact unless specified otherwise.
[2] Selection of various Form combinations may force the use of a larger enclosure.
[3] Specify the appropriate Class 9001 Type K or SK operator required.
[4] Not available for Size 00.
[5] Specify the marking and/or the required Class 9001 Type KN or SKN legend plate.
[6] Indicate the pilot light color as **Form P1** (red), **Form P2** (green), and so forth, as shown in Table 16.320. Unless otherwise requested, standard practice is to wire a red pilot light to indicate that the device is energized. No additional auxiliary contact is required. Also, standard practice is to wire a green pilot light to indicate that the device is de-energized. An additional normally closed auxiliary contact is supplied. A wiring diagram must be provided for other pilot light colors or arrangements.
[7] To determine the maximum number of auxiliary contacts that can be added to each Type S device, and for the appropriate X Form, refer to Table 16.85 (for non-reversing single-speed devices) or Table 16.170 (for reversing or two-speed devices). For Class 8600 reduced voltage controllers, consult the Customer Care Center at 1-888-778-2733.
[8] Only for pilot light. Available for Size 00.

© 2019 Schneider Electric
All Rights Reserved
11/20/2019

Courtesy of Steven Engineering, Inc - (800) 258-9200 - sales@steveneng.com - www.stevenengineering.com

Full Voltage Contactors and Starters

Table 16.321: Control Circuit, Full Voltage and Multi-Speed Controllers Only

Classes 8502, 8536, 8538, 8539, 8702, 8736, 8738, 8739, 8810, 8811 and 8812														
Classes	Factory Modifications		Enclosure Type	Form	NEMA SIZE									
					00	0	1	2	3	4	5	6	7
8502 8536 8538 8539 8702 8736 8738 8739 8810 8811 8812	Separate Control Circuit—(specify voltage and frequency)		Any	S *[9]*	X	X	X	X	X	X	X	X	X
	Fused Control Circuit (without control transformer)												
	One fuse *[10]*		1, 3R, 4, 4X, 12	F	X	X	X	X	X	X	X	—	—
	Two fuses *[10]*		1, 3R, 4, 4X, 7, 9, 12	F4	X	X	X	X	X	X	X	—	—
	Control Circuit Transformers *[11]*—Standard capacity (50 or 60 Hz) Note: All orders requesting Form FT will be supplied as Form F4T.												
	FUSES												
	Primary	Secondary											
	2	1	1, 4, 4X, 12	FF4T	X	X	X	X	X	X	X *[12]*	X	X
	2	1	7 & 9	FF4T	X	X	X	X	X	X	X *[12]*	X	X
	2	2	1, 4, 4X, 12 *[10]*	F4F10T	X	X	X	X	X	X	X *[12]*	—	—
	Additional Capacity (50 or 60 Hz)												
	Two fuses in primary and one fuse in secondary												
	100 VA additional capacity		1, 4, 4X, 12	FF4T11	X	X	X	X	X	X *[12]*	X *[12]*	X	X
	100 VA additional capacity *[10]*		7 & 9	FF4T11	X	X	X	X	X	X *[12]*	X *[12]*	—	—
	200 VA additional capacity		1, 4, 4X, 12	FF4T12	X	X	X	X	X *[12]*	X *[12]*	X *[12]*	X	X
	300 VA additional capacity		1, 4, 4X, 12	FF4T13	X	X *[12]*	X *[12]*	X *[12]*	X *[12]*	X *[12]*	X *[12]*	X	X
	400 VA additional capacity		1, 4, 4X, 12	FF4T14	X	X *[12]*	X *[12]*	X *[12]*	X *[12]*	X*[12]*	X *[12]*	X *[12]*	X*[12]*
	500 VA additional capacity		1, 4, 4X, 12	FF4T15	X	X *[12]*	X *[12]*	X *[12]*	X *[12]*	X *[12]*	X *[12]*	X *[12]*	X *[12]*

Table 16.322: Marine Control

Class	Factory Modification	Enclosure Type	Form
8502 8536 8538 8539 8702 8736 8738 8739 8810 8941	Modification of standard device for use as marine control in accordance with UL508 *[13]*	12/3R 4/4X (stainless steel only)	M10

Table 16.323: Control Circuit Transformer Codes

AC-Operated Devices With Control Transformers	
Voltage 60 Hz (Primary–Secondary)	Code
120–12 *[14]*	V88
120–24 *[14]*	V89
208–120	V84
240–24 *[14]*	V82
240–120	V80
277–120	V85
480–24 *[14]*	V83
480–120	V81
480–240	V87
600–120	V86
Specify	V99

Selection of Control Circuit Transformers

The standard primary/secondary voltages for control circuit transformers are indicated in .

To order, select the desired device with the appropriate transformer Form designation. Then convert the previously selected voltage code (V●●) to reflect the desired primary/secondary voltage for the transformer. The secondary voltage should equal the previously selected coil voltage of the device.

Example:

You have selected 8536SDG1V02S. V02S means that you need a coil voltage of 120-60/110-50 wired for separate control. You would like to add **Form FF4T**, with transformer voltages of 480 V primary, 120 V secondary, and solid-state overload relay protection with selectable Class 10/20 trip class—Form **H30**. (The Form designations needed are **FF4**, **H30**, and **T**.)

The new and complete Class, Type, voltage code, and Form number will be:

Class	Type	Voltage Code	Form *[15]*
8536	SDG1	V81	FF4H30T

[9] All combination style devices—such as Class 8538, 8539, 8738, and 8739—that use **Form S** should also use **Form Y74** (auxiliary contact installed on the disconnect switch) in accordance with NEC Article 430-74.
[10] Not available for Sizes 6 and 7.
[11] See .
[12] **Single** primary voltage must be specified.
[13] Not available for NEMA Sizes 0, 00, or 7. NEMA Sizes 00 and 0 cannot be used with marine controls.
[14] 12 V coils are not available on Sizes 3–7. 24 V coils are not available on Sizes 4–7.
[15] Specify Form numbers in alphabetical order. Each letter indicates the beginning of a new Form and may be followed by one or more numbers.

© 2019 Schneider Electric
All Rights Reserved
11/20/2019

Courtesy of Steven Engineering, Inc - (800) 258-9200 - sales@steveneng.com - www.stevenengineering.com

Solid-State Overload Relay Forms

The solid-state overload relay (SSOLR) is available on NEMA Size 00–7.
For Class 8536, 8538, 8539, 8736, 8738, 8739 and 8810 devices.

Form Description

H # # #

Type S Starter with Motor Logic™ Solid-State Overload Relay (SSOLR)

3: Motor Logic SSOLR, Class 10/20 (Selectable)

0: No additional modifications
1: N.O. auxiliary contact (field convertible to N.C.)

Special Factory-Assembled SSOLR/Contactor Size Combinations (When Applicable):
(must be specified on Size 00 starter orders)
Blank: Overload relay matched to the starter size (for example, Size 1 contactor and 9-27 A overload relay)
0: 6–18 A overload relay on the starter size indicated by the starter catalog number
1: 9–27 A overload relay on the starter size indicated by the starter catalog number
2: 15–45 A overload relay on the starter size indicated by the starter catalog number
3: 30–90 A overload relay on the starter size indicated by the starter catalog number
4: 45–135 A overload relay on the starter size indicated by the starter catalog number
8: 1.5–4.5 A overload relay on the starter size indicated by the starter catalog number (only offered on Feature Units)
9: 3–9 A overload relay on the starter size indicated by the starter catalog number

Special note for Class 8810 devices:

You **must** specify two separate Form numbers to get Motor Logic overload relays on two-speed starters.

The catalog number will be alphanumeric. Example:
- Open style, Size 4 two speed starter with Motor Logic SSOLRs
- Single winding, 460 V, constant or variable torque
- High speed FLA = 96 A
- Low speed FLA = 27 A (use Size 2 overload relay)

Catalog number to order: **8810SF01V02H30H302S**
Where:
- Form H30 is a Size 4 contactor with a 45–135 A Motor Logic SSOLR for high speed
- Form H302 is a 15–45 A Motor Logic SSOLR on the low speed contactor.

NOTE: Size 7 comes standard with the Motor Logic SSOLR, Class 10/20 (Selectable). No Form designation is required.

Table 16.324: Special Factory-Assembled Starter Combinations with Motor Logic SSOLR Protection

NEMA Contactor Size	SSOLR Size						
	00		0	1	2	3	4
	1.5–4.5 A	3–9 A	6–18 A	9–27 A	15–45 A	30–90 A	45–135 A
00	H308	H30	—	—	—	—	—
0	H308	H309	H30	—	—	—	—
1	H308	H309	H300	H30	—	—	—
2	—	H309	H300	H301	H30	—	—
3	—	—	—	—	—	H30	—
4	—	—	—	—	—	—	H30

Adapted Bimetallic Overload Relay Forms

New!

Table 16.325: Adapted Bimetallic Overload Relay for NEMA Type S Starter

This bimetallic overload relay is available on NEMA Sizes 00, 0 & 1 for Class 8536, 8538, 8539, 8736, 8738 and 8739 devices. To order a starter with the **adapter only**, add Form E to the catalog number (8536SBG2V02ES). When ordering with the adapter and bimetallic overload relay installed, use Table 16.326 as a guide.

Form Description

E # ## #

Bimetallic Overload Relay

Class
1: Class 10 Balanced Loads (with single phase sensitivity)
2: Class 20 Balanced Loads (with single phase sensitivity)
3: Class 10 Unbalanced Loads (without single phase sensitivity)
4: Class 20 Unbalanced Loads (without single phase sensitivity)

FLA: Suffix from the TeSys D Overload Relays table below (for example, for 4–6 FLA, use suffix **10**)

Terminals: **0** for screw terminal and **6** for ring tongue terminals

Sample catalog number: **8536SCO3V02E2160S**
NEMA Size 1 starter controlling a 7.5 hp motor (11 FLA)—Bimetallic overload relay is LRD16L (9–13 FLA)

Table 16.326: TeSys D Overload Relays for Sizes 00–1 Type S Starters, Non-Reversing and Reversing, Classes 8536, 8538, 8539, 8736, 8738, and 8739

Current Setting Range Amperes	Class 20 *with* Single Phase Sensitivity	Class 20 *without* Single Phase Sensitivity	Class 20 *with* Single Phase Sensitivity	Class 20 *without* Single Phase Sensitivity	Factory Installed—Catalog Number Suffix (CP1 List)
	Screw Termination	Screw Termination	Ring Tongue Connector	Ring Tongue Connector	
0.40 to 0.63	LRD04L	LR3D04L	LRD04L6	LR3D04L6	04
0.63 to 1	LRD05L	LR3D05L	LRD05L6	LR3D05L6	05
1 to 1.6	LRD06L	LR3D06L	LRD06L6	LR3D06L6	06
1.6 to 2.5	LRD07L	LR3D07L	LRD07L6	LR3D07L6	07
2.5 to 4	LRD08L	LR3D08L	LRD08L6	LR3D08L6	08
4 to 6	LRD10L	LR3D10L	LRD10L6	LR3D10L6	10
5.5 to 8	LRD12L	LR3D12L	LRD12L6	LR3D12L6	12
7 to 10	LRD14L	LR3D14L	LRD14L6	LR3D14L6	14
9 to 13	LRD16L	LR3D16L	LRD16L6	LR3D16L6	16
12 to 18	LRD21L	LR3D21L	LRD21L6	LR3D21L6	21
17 to 24	LRD22L	LR3D22L	LRD22L6	LR3D22L6	22
23 to 32	LRD32L	LR3D32L	LRD32L6	LR3D32L6	32

© 2019 Schneider Electric
All Rights Reserved
11/20/2019

Courtesy of Steven Engineering, Inc - (800) 258-9200 - sales@steveneng.com - www.stevenengineering.com

Solid-State TeSys D Overload Relays for Type S Starters

Sizes 00–1, Non-Reversing (Classes 8536, 8538, 8539) and Reversing (Classes 8736, 8738 and 8739)

NOTE:

- **Field installed only**: The LR9D Overload Relay cannot be factory installed—it must be purchased separately and field installed.
- **Single-phase motor applications**: When using the LR9D with a single-phase motor, you must purchase the three-pole starter to accommodate looping of the motor leads.

Current Setting	Overload Relay Catalog Number (sold separately)
Range Amperes	Trip Class 5/10/20/30 Dip Switch Selectable
0.1–0.5 A	LR9D01
0.4–2 A	LR9D02
1.6–8 A	LR9D08
6.4–32 A	LR9D32

TeSys T Factory Modifications (Forms)

Table 16.328: TeSys T Motor Management System Modifications H6xx or H7xx for use with Class 8536 and 8736 (Open Starters)

Used on Size	Range	Form	
		Control Voltage	
		100–240 Vac	24 Vdc
1	0.4–8 A	H61X *[16]*	H71X *[16]*
1	1.35–27 A	H62X *[16]*	H72X *[16]*
2, 3	5.0–100 A	H63X *[16]*	H73X *[16]*
4	8–160 (CT 300:5 3 turns)	H65X *[16]*	H75X *[16]*
5	24–480 A (CT 300:5 1 turn)	H66X *[16]*	H76X *[16]*
6	48–960 A (CT 600:5 1 turn)	H67X *[16]*	H77X *[16]*

NOTES:

- The product configurator must be used to order TeSys T open starters.
- The auxiliary contact for the control of the starter coil has a maximum rating of 240 Vac.

Table 16.327: Communication Codes

Communication Network	Code
Modbus	2
ProfiBus	3
CANopen	4
DeviceNet	5
Ethernet TCP/IP (communication protocols: Ethernet/IP and Modbus/TCP)	6

Table 16.329: Full Voltage Controllers Only

Classes 8502, 8536, 8538, 8539, 8702, 8736, 8738, 8739, 8810, 8811 and 8812													
Factory Modifications		Enclosure Type	Form	NEMA Size									
				00	0	1	2	3	4	5	6	7
Power Poles (addition of one)	NEMA Size 1, 30 A, single pole, N.O.	Any	Y428	—	X	X	X *[17]*	X	X	X	X	X
	NEMA Size 1, 30 A, single pole, N.C.	Any	Y429	—	X	X	X *[17]*	X	X	X	X	X
	NEMA Size 1, 30 A, double pole, N.O./N.O.	Any	Y430	—	X	X	X *[17]*	X	X	X	X	X
	NEMA Size 1, 30 A, double pole, N.C./N.C.	Any	Y434	—	X	X	X *[17]*	X	X	X	X	X
	NEMA Size 1, 30 A, double pole, N.O./N.C.	Any	Y435	—	X	X	X *[17]*	X	X	X	X	X
	NEMA Size 2, single pole, N.O.	Any	Y436	—	—	—	X *[17]*	X	X	X	X	X
	NEMA Size 2, single pole, N.C.	Any	Y437	—	—	—	X *[17]*	X	X	X	X	X
	NEMA Size 2, double pole, N.O./N.O.	Any	Y438	—	—	—	X *[17]*	X	X	X	X	X
	NEMA Size 2, double pole, N.C./N.C.	Any	Y439	—	—	—	X *[17]*	X	X	X	X	X
	NEMA Size 2, double pole, N.O./N.C.	Any	Y440	—	—	—	X *[17]*	X	X	X	X	X
Miscellaneous	**Coil transient suppressor (120 V only), per coil.**	Any	Y145	X	X	X	X	X	X	X	X	X
	Addition of terminal blocks (specify wired or unwired).		G56 *[18]*	—	X	X	X	X	X	X	X	X
	Wired, per terminal, each	1, 4, 12	G50 *[18]*	—	X	X	X	X	X	X	X	X
	Unwired, per terminal, each	1, 4, 12										

[16] Where X is the communication option according to Table 16.327 at right (for example, H612).
[17] When adding a power pole to a Size 2 device, also specify **Form Y118** (stronger coil, Size 2 only).
[18] Addition of terminal block Type 9080CA or 9080GR6 only. The number of circuits is the same as the ending of the Form number (example: G505 is a 5–circuit unwired terminal block.) Available in groups of 5 only.

© 2019 Schneider Electric
All Rights Reserved
11/20/2019

Courtesy of Steven Engineering, Inc - (800) 258-9200 - sales@steveneng.com - www.stevenengineering.com

Type S Contactor and Starter Forms

Table 16.330: Full Voltage Controllers *[19]*

Classes 8502, 8536, 8538, 8539, 8702, 8736, 8738, 8739, and 8810				NEMA Size							
Factory Modifications		Enclosure Type	Form	0	1 1 PW 1 YD	2 2 PW 2 YD	3 3 PW 3 YD	4 4 PW 4 YD	5 5 PW 5 YD	6 6 PW 6 YD	7 7 PW 7 YD
Auxiliary Relays	Control relay (4 and 8 poles)	1, 12	R174	X	X	X	X	X	X	X	X
		4, 4X *[20]*	R174	X	X	X	X	X	X	X	X
		7, 9	R174	X	X	X	X	X	X	—	—
		1, 12	R178	X	X	X	X	X	X	X	X
		4, 4X *[20]*	R178	X	X	X	X	X	X	X	X
		7, 9	R178	X	X	X	X	X	X	—	—
	Pneumatic Timing Relay – specify Class 9050 Type A or B										
	0.1 seconds to 1.0 minute—On delay	1	K25	X	X	X	X	X	X	X	X
		4, 4X *[20]*, 12, 3R	K25	X	X	X	X	X	X	X	X
		7, 9	K25	X	X	X	X	X	X	—	—
	0.1 seconds to 1.0 minute—Off delay	1	K26	X	X	X	X	X	X	X	X
		4, 4X *[20]*, 12, 3R	K26	X	X	X	X	X	X	X	X
		7, 9	K26	X	X	X	X	X	X	—	—
	1.0 to 3.0 minute—On delay	1, 4, 12, 3R	K37	X	X	X	X	X	X	X	X
		4X *[20]*, 7, 9	K37	X	X	X	X	X	X	—	—
	1.0 to 3.0 minute—Off delay	1, 4, 12, 3R	K38	X	X	X	X	X	X	X	X
		4X *[20]*, 7, 9	K38	X	X	X	X	X	X	—	—
	Solid-state timing relay (specify timing range) and timer (120 V control required)	1, 4, 4X, 7, 9, 12	K1070	X	X	X	X	X	X	X	X
	Motor-driven timing relay *[21] [22]*	1, 4, 12	K5	X	X	X	X	X	X	X	X
	Phase failure and phase reversal relay with time delay option including under and over voltage protection.	1, 4, 4X, 7/9, 12, 3R	R44	X	X	X	X	X	X	X	X
	Addition of a protective relay with options of phase failure with time delay, phase reversal and under/over voltage protection (RM3TR1). Both motor voltage and control voltage (V8• voltage code) must be specified with device even if Form S is specified. Form replaces Forms Y444, Y445, Y447, Y448 and Y449.										
	For multispeed controllers: Compelling relay (requires motor to be started in low speed)	1, 4, 7, 9, 12	R1	X	X	X	X	X	X	X	X
	Accelerating relay (provides timed acceleration to selected speed):										
	For Class 8810	1, 4, 7, 9, 12	R2	X	X	X	X	X	X	X	X
	For Class 8811	1, 4, 7, 9, 12	R2	X	X	X	X	X	X	X	X
	For Class 8812	1, 4, 7, 9, 12	R2	X	X	X	X	X	X	X	X
	Decelerating relay (imposes a timing delay during transfer from a higher to a lower speed):										
	For Class 8810	1, 4, 7, 9, 12	R3	X	X	X	X	X	X	X	X
	For Class 8811	1, 4, 7, 9, 12	R3	X	X	X	X	X	X	X	X
	For Class 8812	1, 4, 7, 9, 12	R3	X	X	X	X	X	X	X	X
	Antiplugging timers and relays	1, 4, 7, 9, 12	R10	X	X	X	X	X	X	X	X
Meters and Metering *[23]*	Ammeter in cover (includes current transformer if required)	1	G91	X	X	X	X	X	X	X	X
	Ammeter and switch with two current transformers	1	G92	—	X	X	X	X	X	X	X
	Ammeter and switch with three current transformers	1	G93	—	X	X	X	X	X	X	X
	Voltmeter mounted	1	G94	—	X	X	X	X	X	X	X
	Voltmeter and switch mounted	1	G95	—	X	X	X	X	X	X	X
	Elapsed time meter	1, 12	G97	X	X	X	X	X	X	X	X
	Operation counter	1, 12	G99	X	X	X	X	X	X	X	X
Auxiliary Contacts	Additional starter (contactor) auxiliary contacts (Specify number of additional N.O. or N.C. contacts required per contactor.) Each will be X•• (for example, X01).	Any	X	X	X	X	X	X	X	X	X
	To determine the maximum number of auxiliary contacts that can be added to each Type S device, and for the appropriate X Form, refer to the tables in the Class 8536 section on page 16-30 (for non-reversing single-speed devices) or the Class 8736 section on page 16-61 (for reversing or two-speed devices). For Class 8600 Reduced Voltage controllers, consult Customer Care Center at 1-888-778-2733.										
	Auxiliary contacts installed on disconnect switch or circuit breaker operating mechanism.										
	SPDT	1, 4, 4X, 12	Y74	X	X	X	X	X	X	X	X
	DPDT	1, 4, 4X, 12	Y75	X	X	X	X	X	X	X	X
	(**Note:** The above contacts do not switch with the automatic tripping of the circuit breaker. If such operation is required, consult your nearest Schneider Electric sales office.)										
Enclo-sures	Space heater with N.C. auxiliary contact	1, 4, 4X, 12	G51	X	X	X	X	X	X	X	X
	Function identification plate, with marking as specified	Any	G11	X	X	X	X	X	X	X	X
	Drain and breather installed	7 and 9 *[24]*	Y41	X	X	X	X	X	X	X	—
	Cover gaskets added to NEMA 1 enclosures:										
	For Classes 8538 and 8539	1	Y47	X	X	Std.	Std.	Std.	Std.	—	—
	For Classes 8738 and 8739	1	Y47	Std.	Std.	Std.	Std.	Std.	Std.	—	—
	For other full voltage controllers	1	Y47	X	X	X	X	X	X	X	X
	For reduced voltage controllers	1	Y47	X	X	X	X	X	X	X	X
	Brushed stainless steel watertight device										
	Class 8606	—	Y56	—	—	X	X	X	X	X	X
	Classes 8630 and 8640	—	Y56	—	Std.	Std.	Std.	Std.	X	X	X

[19] NEMA 7 and 9 enclosures are available only with Class 2510, 8502, and 8702 devices.
[20] This adder, used with a NEMA 4X enclosure, applies only to Classes 8538, 8539, 8738, 8739, and 8810 non-reversing.
[21] If the controller has a control transformer, price that transformer with additional capacity for the relay provided.
[22] Specify the control and line voltage.
[23] The motor hp and voltage must be specified when placing an order. Meters are panel-mounted in NEMA 12 enclosures.
[24] Available only on Spin Top™ and cast aluminum NEMA 7 and 9 enclosures.

© 2019 Schneider Electric
All Rights Reserved
11/20/2019

Courtesy of Steven Engineering, Inc - (800) 258-9200 - sales@steveneng.com - www.stevenengineering.com

Replacement AC Magnetic Coils

Table 16.331: Replacement AC Magnet Coils for Magnetic Contactors and Starters

Equipment To Be Serviced				Coil Prefix, or Class and Type	Hz	Suffix Number (Complete Coil Number Consists of the Prefix or the Class and Type, Followed by the Suffix)												Coil VA	
Device	Size	Type	Poles			24 V	110-115 V	120 V	208 V	220 V	240 V	277 V	380 V	440 V	480 V	550 V	600 V	In-rush	Sealed
Coils for Present Design Magnetic Contactors and Starters Classes 8502, 8536, 8538, 8539, 8606, 8630, 8640, 8647, 8650, 8651, 8702, 8736, 8738, 8739, 8810, 8811, 8812, 8903, 8910 [1] and 8940 (except NP)	30 A	L	2–6	9998L	60 50	23 24	— 44	44 45	50 52	[2] 53	53 54	55 —	— 60	— 62	62 63	— 65	65 66	150 140	30 30
			8–12	9998LH	60 50	23 24	— 44	44 45	50 —	[2] 53	53 54	55 —	— 60	— 62	62 —	— 65	65 —	180 170	35 35
		LX (Latch)	2–4	9998L	60 50	23 24	— 44	44 45	50 52	— 53	53 54	55 —	— 60	— 62	62 63	— 65	65 66	150 140	— —
			6–12	9998LH	60 50	23 24	— 44	44 45	50 —	— 53	53 54	55 —	— 60	— 62	62 —	— 65	65 —	180 170	— —
	00	SA [3] (Series B)	All	9998SAC	60 50	23 —	[2] 45	45 —	52 —	[2] 54	54 —	55 —	59 —	[2] 62	62 —	[2] 65	65 —	165 —	33 —
	00, 0, 1, 1-P, & 30 A	SA (Series A) SB, SC, & SM	All	31041400	60 50	20 22	[2] 42	42 43	48 —	[2] 51	51 53	52 —	56 57	58 60	60 [2]	61 62	62 64	245 232	27 26
	2 & 60 A	SD & SP	2 & 3	31063409	60 50	16 17	[2] 38	38 39	44 —	[2] 47	47 48	49 —	53 54	[2] 57	57 —	[2] 60	60 61	311 296	37 36
			4 & 5	31063400	60 50	16 17	[2] 38	38 39	44 —	[2] 47	47 48	49 —	53 54	[2] 57	57 —	[2] 60	60 61	438 429	38 37
	3 & 100 A	DPA12_, SE, SQ, & SYD138	2 & 3	31074400	60 50	16 17	[2] 38	38 39	44 —	[2] 47	47 48	49 —	53 54	[2] 57	57 —	[2] 60	60 61	700 678	46 47
			4 & 5	31091400	60 50	— —	[2] 38	38 39	44 —	[2] 47	47 48	49 —	53 54	[2] 57	57 58	[2] 60	60 61	1185 1260	85 89
	4 & 200 A	SF, SV, & SYD230	All	31091400	60 50	— —	[2] 38	38 39	44 —	[2] 47	47 48	49 —	53 54	[2] 57	57 58	[2] 60	60 61	1185 1260	85 89
	5 & 300 A	SG, SX, & SYD368 Series A [4]	All	31096400	60 50	— —	[2] 09	09 10	15 —	[2] 18	18 —	19 —	21 22	[2] 24	24 —	[2] 29	29 30	2970 2970	212 250
		SG, SX, & SYD368 Series B [4]	All	31096320	60 50	— —	50 50	50 50	51 —	52 52	52 52	53 —	54 54	55 55	55 55	— —	— —	1300 —	14 —
	6 & 7	SH & SJ	2–3	Coil Part Number 3110440050 (All System Voltages)														1780	48
	400, 600 & 800 A	SY, SZ, SJ (Elect. Held)																1960	59
		SY, SZ, SJ (Mech. Held)	2–3	31104418	60 50	— —	[2] 09	09 —	15 —	[2] 18	18 —	19 —	— —	[2] 24	24 —	[2] 29	29 —	1530 1250	— —

NOTE: Refer to Table 16.333 for mechanically held unlatch coils.

Table 16.332: Size 5 Coil Modification Kits

Catalog Number	Volage
9998SG120	120 V
9998SG208	208 V
9998SG240	240 V
9998SG277	277 V
9998SG380	380 V
9998SG480	480 V

NEMA Size 5, Type S, E-Coil Modification Kit for Series A Devices

Applies to Classes 8502, 8536, 8538, 8539, 8606, 8630, 8640, 8647, 8650, 8651, 8702, 8736, 8738, 8739, 8810, 8811, 8812, 8910 and 8903. Consists of:

- E-coil (31096320** from Table 16.331).
- Armature
- 15 A, 600 V fuse and holder (Class 9999SFR)
- Bottom magnet
- Instruction material

NOTE: No 600 V coil nor mechanically held lighting contactor.

[1] For 8910DPA1● to DPA9●, see page 16-90.
[2] Use a 60 Hz coil of the next higher voltage.
[3] Use on Type S Series B devices only.
[4] Size 5 Series A devices should use these only as replacements for the exact part number. Another option is to use the coil modification kits in Table 16.332 for the Series B coil.

© 2019 Schneider Electric
All Rights Reserved
11/20/2019

Courtesy of Steven Engineering, Inc - (800) 258-9200 - sales@steveneng.com - www.stevenengineering.com

Relays, Timers, and Contactors

Table 16.333: Replacement AC Magnet Coils for Relays, Timers, and Contactors

Equipment To Be Serviced			Coil Prefix or Class and Type	Hz	Suffix Number (Complete Coil Number Consists of Prefix or Class and Type Followed by Suffix Number)												Coil VA	
Device	Type	Poles			24 V	110–115 V	120 V	208 V	220 V	240 V	277 V	380 V	440 V	480 V	550 V	600 V	In-rush	Sealed
Classes 8501 and 9050																		
8501 (Relays)	X	All	9998X *[5]*	60 50	23 24	— 44	44 —	51 52	52 53	53 —	55 —	— —	— 62	62 —	— 65	65 —	148 143	23 25
9050 (Timer)	A	All	2959-S49-	60 50	W25A W25B	W31B W32A	W32A W32B	W34A W34B	W34B W35A	W35A W35B	W35B W36A	— —	W37B W38A	W38A W38B	W38B W39A	W39A W39B	74 68	17 17
	B *[6]*	All	31017-400-	60 50	33 34	— —	54 55	61 —	61 63	63 64	65 —	— —	70 72	72 73	73 75	75 76	165 155	27 27
Mechanically Held *Unlatch* Coils—Classes 8508 and 8903 **NOTE**: A *latch* coil is also used with mechanically held devices. For selection, see Table 16.331.																		
8903 (Lighting Contactors)	LX	All	9998LX	60 50	23 —	— 44	44 —	51 —	— 53	53 —	55 —	— —	— 62	62 —	— 65	65 —	25 —	— —
	SM, SP	All	2959-S13	60 50	W23B W24B	*[7]* W30B	W30B W31B	W33A —	*[7]* W33B	W33B W34B	W34A —	— W36A	*[7]* W36B	W36B —	*[7]* W37B	W37B —	80 —	— —
	SQ, SV, SX, SY, SZ	All	31096-416	60 50	03 —	*[7]* 09	09 —	15 —	*[7]* 18	18 —	20 —	— 22	*[7]* 24	24 —	*[7]* 28	28 —	550 —	— —
	SJ	All	31123-403	60 50	03 —	*[7]* 09	09 —	15 —	*[7]* 18	18 —	20 —	— 22	*[7]* 24	24 —	*[7]* 28	28 —	2100 —	— —

Table 16.334: Replacement DC Magnet Coils for Magnetic Relays and Timers

Equipment To Be Serviced			Coil Prefix or Class and Type	Suffix Number (Complete Coil Number Consists of Prefix or Class and Type Followed by Suffix Number.)													Coil Burden Watts
Class	Type	Poles		6 V	12 V	18 V	24 V	32 V	48 V	64 V	72 V	90 V	110 V	115/125 V	220 V	230/250 V	
8501 (Relays)	XD	All	9998XD	19	28	34	37	40	46	49	52	55	—	58	—	67	18
	XDL	—	9998XDL	19	28	34B	37B	40B	46B	49B	52B	55B	—	58B	—	67B	50
	XUD	All	9998XUD	19	28	—	37	—	46	—	—	—	—	58 *[8]*	—	67 *[8]*	16
9050 (Timers)	C	—	31018-400-	22	31	—	40	—	49	—	—	—	—	61	—	70	14
	H	—	4491S1	W21	W24	—	W27	—	W30	—	—	—	—	W34	—	W37	14

Table 16.335: Replacement Coil for 8903 Panel Board Lighting Contactors

Class	Type	Replacement Solenoid	Catalog Number
8903	PB	120 V	9998PBV02
		208 V	9998PBV08
		240/277 V	9998PBV39
		480 V	9998PBV28

[5] To order an unlatch coil, add **L** to the Type number and **B** to the suffix. Example: For a 120 V 60 Hz unlatch coil, order 9998X**L**44**B**.
[6] Series C (double pole) and Series E (single pole).
[7] Use a 60 Hz coil of the next higher voltage.
[8] Not dual rated. 125 Vdc or 250 Vdc only.

© 2019 Schneider Electric
All Rights Reserved
11/20/2019

Courtesy of Steven Engineering, Inc - (800) 258-9200 - sales@steveneng.com - www.stevenengineering.com

Contactor and Starter Replacement Part Kits

Class 9998 replacement parts kits are available for servicing Square D relays, contactors, and starters as well as pressure, vacuum, and float switches. Each kit contains the necessary movable and stationary contacts, contact springs (when required —NEMA Size 3 and above do not include contact springs, and springs are not available), and additional hardware required to service the devices listed below. When servicing devices having more poles than contained in the corresponding kit, it may be necessary to order an additional kit.

Table 16.336: Magnetic Contactor and Starter Contact Kits for Present Designs

Equipment To Be Serviced			No. of Poles in Kit	Class 9998 Parts Kit Type No.
Class	Type	NEMA Size or Ampere Rating		
8502 8536 8538 8539 8547 8549 8606 8630 8640 8647 8702 8736 8738 8739 8810 8811 8812 8940	SA- (Series B)	00	3	SJ1
	SB-	0	3 4	SL2 SL12
	SB-, SC-(Power Pole Adder)	0 & 1	1	SL22
	SC-	1 & 1P 1	3 4	SL3 SL13
	SD-	2	3 4	SL4 SL14
	SD-(Power Pole Adder)	2	1	SL24
	SE-	3	2 3	SL6 SL7
	SF-	4	2 3	SL8 SL9
	SG-	5	2 3	SL10 SL11
	SH-	6	2 3	SL25 SL26
	SJ-	7	2 3	SL30 SL31
8903	L (Series C) & LX (Series B)	30 A	4	RA5B
	SM-	30 A	3 4	SL3 SL13
	SP-	60 A	3 4	SL4 SL14
	SQ-	100 A	2 3	SL6 SL7
	SV-	200 A	2 3	SL8 SL9
	SX-	300 A	2 3	SL10 SL11
	SY-	400 A	2 3	SL25 SL26
	SZ-	600 A	2 3	SL32 SL33
	SJ-	800 A	2 3	SL30 SL31
	PBM, PBP	30, 60 A	2	PB2
	PBN, PBQ	75, 100 A		
	PBM, PBP	30, 60 A	3	PB3
	PBN, PBQ	75, 100 A		
	PBR, PBV, PBW	150, 200, 225 A	2	PB14
	PBR, PBV, PBW	150, 200, 225 A	3	PB15

Table 16.337: Class 8965 Replacement Contact Kits

Device Type	Device Series	Class 9998 Kit Type	Device Series	Class 9998 Kit Type
DPR53 DPR63	A A	DRC5 *[1]* DRC6 *[1]*	—	—
RO10	A & B	RA10	C	RA14
RO11	A & B	RA11	C	RA15
RO12	A & B	RA12	C	RA16
RO13	A & B	RA13	C	RA17

Table 16.338: Manual Starter Contact Kits

Equipment To Be Serviced			No. of Poles in Kit	Class 9998 Parts Kit Type No.
Class	Type	NEMA Size		
2510 Manual Starters	M-, T-	M-0	3	ML1
		M-1 & M-1P	3	ML2

Table 16.339: Replacement Control Transformers (150 VA) Class 8502, 8536 Type S Size 6

Voltage		Part Number
60 Hz	50 Hz	
240/480–120	220/440–110	3110451250
208–120	—	3110451252
277–120	—	3110451253
—	380–110	3110451254
600–120	550–110	3110451251
120–120	110–110	3110451255
240–120	220–110	3110451256

Table 16.340: Replacement Control Transformers (200 VA) Class 8502, 8536 Type S Size 7

Voltage		Part Number
60 Hz	50 Hz	
240/480–120	220/440–110	3112350150
208–120	—	3112350152
277–120	—	3112350153
—	380–110	3112350154
600–120	550–110	3112350151
120–120	110–110	3112350155
240–120	220–110	3112350156

Table 16.341: Magnetic Contactor and Starter Contact Kits for Obsolete Designs

Equipment To Be Serviced			No. of Poles in Kit	Class 9998 Parts Kit Type No.
Class	Type	NEMA Size		
8502 & 8536*[2]*	SA-, (Series A)	00	3 4	SL2 SL12
8903	LL, L (Series A, B) & LX (Series A)	20 A	4	RA5

Table 16.342: Class 8910, 8911 & 8965 Replacement Contact Kits

Device To Be Serviced			Class 9998	
Class 8910 Type	Class 8911 Type	Series	1-Pole Type	3-Pole Type
SYD138 SYD230 SYD368	— — —	— — —	— — —	SL27 SL28 SL29
DPA_50A DPA_60A DPA_75A DPA_90A	DPSO5_ — — —	A, B A, B A A	DRC5 DRC6 DRC7 DRC9	— — — —

Table 16.343: How to Order

To Order Specify:	Catalog Number	
	Class	Type
• Class Number • Type Number	9998	SL6

[1] Single-pole kits.
[2] Includes reversing, two-speed, and similar devices. Select the coil based on the NEMA size of the basic starter or contactor.

© 2019 Schneider Electric
All Rights Reserved
11/20/2019

Courtesy of Steven Engineering, Inc - (800) 258-9200 - sales@steveneng.com - www.stevenengineering.com

Class 9998 Type SO1

Contact Units for Melting Alloy Overload Relays

One normally closed contact, Class 9998 Type SO1, is provided in each overload relay block on Type S starters Sizes 00-6. The Class 9998 Type SO1 contact unit listed in Table 16.344 is provided as standard in each Class 9065 melting alloy overload relay. Contact modules can be easily replaced and are identified in Table 16.344. Isolated overload relay alarm circuit contacts are available as an optional feature. A pilot light or alarm bell can be wired in series with this contact to indicate that the overload relay has tripped. For further information on isolated alarm contacts refer to Class 9999 Types SO4 and SO5, page 16-129.

Table 16.344: Class 9998 Type SO1 Contact Units for Melting Alloy Overload Relays

Magnetic Starter			Description *[3]*	Parts Kit Number
NEMA Size	Type	Series		
00–4 and 6	SA–SF SH	A & B	Standard N.C. contact unit	Class 9998 Type SO1*[4]*

Class 9998 Type UB Universal Baseplate

A universal baseplate may be used to retrofit a Square D Type S NEMA starter into an application which is currently using a competitive NEMA starter. The universal baseplate is a metal plate which attaches to the panel in the location of the starter to be replaced. The Type S starter then mounts to the baseplate. It is available for NEMA Sizes 00 through 4, and mounting screws are provided with each plate.

The universal baseplate adapter allows the Type S starter to replace the competitive starters in Table 16.345:

Table 16.345: Competitive Starter Replacement

Competitor Starter	NEMA Size	Base-plate	NEMA Size	Base-plate	NEMA Size	Base-plate	NEMA Size	Base-plate
Allen Bradley 509	0, 1	UB01	2	UB02	3	UB03	4	UB04
Allen Bradley 709	1		2		3		4	
Cutler Hammer Freedom Series	00, 0, 1		2		3		4	
Furnas ESP100	0, 1		2		3		4	
Furnas INNOVA	0, 1		2		3		4	
General Electric CR306	00, 0, 1		2		3		4	
Telemecanique “A” Line and Pre-type “S”	0, 1	UB11	2	UB12	3	UB13	4	UB14

Melting Alloy Overload Relay Jumper Strap Kits

Jumper strap kits are for use on three-phase manual or magnetic starters with melting alloy overload relays only, where a three-phase starter is used to control a single-phase motor. These kits will include two jumper straps, a wiring diagram showing how to wire a three-phase starter to control a single-phase motor, and single-phase (one thermal unit) selection tables.

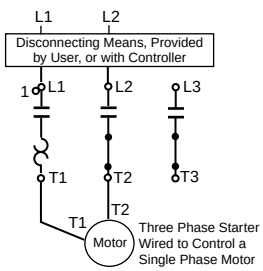

Table 16.346: Melting Alloy Overload Relay Jumper Strap Kits

Class	For Starter		Class 9998 Kit Type *[5]*
	Size	Type	
ALL	00, 0, 1, 2 and M0 & M1	SA, SB, SC, SD and M & T (Manual)	SO31
	3,4	SE, SF	SO32
	5	SG	None Available

Table 16.347: How to Order

To Order Specify:	Catalog Number	
• Class Number • Type Number	Class	Type
	9998	UB01

[3] Refer to page Table 16.351 for contact ratings.
[4] The Type SO1 is also the replacement contact unit for Class 9065 Type M melting alloy overload relays.
[5] CP1 discount schedule.

© 2019 Schneider Electric
All Rights Reserved
11/20/2019

Courtesy of Steven Engineering, Inc - (800) 258-9200 - sales@steveneng.com - www.stevenengineering.com

Cover-Mounted Control Unit Selection

Class 9999 push button, selector switch and pilot light cover-mounted control unit kits can be easily field installed in a NEMA 1, 3R, 4 or 12 Type S contactor or starter enclosure cover. Knockouts or removable closing plates are furnished with many enclosure covers for convenient field installation of control units. Kits are supplied with leads and clearly illustrated instructions. The Class 9999 cover mounted control unit kits are identical to the units which are factory installed.

Table 16.348: Cover-Mounted Control Unit Selection

For Use With					NEMA 1 Kit 8538, 8539, and 8903 Pre-Series K						NEMA 1 and 12/3R Kit 8538, 8539, and 8903 Series K and Later [1]			NEMA 4/4X Kit (Stainless)[1]		
Class	Type	NEMA Size or Ampere Rating	No. of Poles	V	Red or Green Pilot Light[2]		Push Button		Selector Switch		Red or Green Pilot Light	Push Button	Selector Switch	Red or Green Pilot Light	Push Button	Selector Switch
					With Control Trans-former (Form F4T)	Standard	Start-Stop	On-Off	Hand-Off-Auto	On-Off	120 V 60 Hz	Start-Stop or On-Off	Hand-Off-Auto	120 V 60 Hz	Start-Stop or On-Off	Hand-Off-Auto
					Type	Type	Type	Type	Type	Type	Type	Type	Type	Type	Type	Type
8502 & 8536	SA, SB, SC	00, 0, 1, 1P	All	6–600 V 50–60 Hz	SP28R [3]	SP2R	SA2	SA10	SC2	SC22	SP28R [2] [3] (incan-descent) SPL28R (LED–Red) SPL28G (LED–Green)	SA3[4]	SC8	SP29R [2] [3] (incan-descent) SPL29R (LED–Red) SPL29G (LED–Green)	SA13	SC9
	SD	2	All		SP28R [3]	SP3R										
	SE	3	2–3		SP28R [3]	SP4R										
			4–5		SP28R [3]	SP5R										
	SF	4	All		SP28R [3]	SP28R [3]	SA3	SA3	SC8	—						
	SG–SJ	5–7	All		SP28R [3]	SP28R [3]										
8538 8539 8702 8736	SB, SC	0, 1	All		SP12R	SP12R	SA2	SA10	SC2	SC22						
	SD	2	All		SP13R	SP13R										
	SE	3	All		SP14R	SP14R										
	SF	4	All		SP15R	SP15R										
	SG–SJ	5–7	All		SP28R [3]	SP28R [3]	SA3	SA3	SC8	—						
8903, Electrically Held [5]	L	20 A	All		SP28R [3]	—	—	SA10 [6]	—	SC22 [6]						
	SM	30 A	All		SP28R [3]	SP2R	SA2 [4]	SA10 [4]	SC2	SC22						
	SP	60 A	All		SP28R [3]	SP3R										
	SQ	100 A	All		SP28R [3]	SP28R [3]	SA3 [4]	SA3 [4]	SC8	—						
	SJ, SV, SX, SY, SZ	200–800 A	All		SP28R [3]	SP28R [3]	SA3 [4]	SA3 [4]	SC8	—						

NOTE: Field modification kits are **not** available for the polyester enclosures.

Class 9999 Type SP2R Pilot Light Kit

Class 9999 Type SA2 Push Button Kit

Class 9999 Type SC2 Selector Switch Kit

Class 9999 Type SA3 Push Button Kit

Table 16.349: NEMA 1 Enclosure Closing Plates

For Use With			Description	Type
Class	Type	NEMA Size or Ampere Rating		
8502, 8536, 8903	SA–SE or SM–SP	00–3 or 30–60A	For Pilot Light or Reset—Slip-on Cover NEMA 1 Enclosure	SG2
			For Push Button or Selector Switch—Slip-on Cover NEMA 1 Enclosure	SG3
8538 & 8539 Pre-series "K"	SB–SF	0–4	For Push Button or Selector Switch—Hinged Cover NEMA 1 Enclosure	SG1
			For Pilot Light—Hinged Cover NEMA 1 Enclosure	SG2
8538, 8539 Series J and later	SB–SF	0–4	Push Button or Pilot Light NEMA Combination Starter	9001K51
8903	SM–SV	30–400 A	Combination Lighting Contactor	9001K51

Table 16.350: How to Order

To Order Specify:	Catalog Number	
• Class Number	Class	Type
• Type Number	9999	SP29R

[1] User-made openings are required in order to field install these modification kits on standard Class 8502 and 8536 Type S Sizes 0–2, and Class 8903 Sizes 30–60 A, NEMA 4 and 12 enclosures.
[2] Each pilot light kit contains one red and one green lens cap.
[3] The coil voltage must be the same as the pilot light rating. The kit contains one 60 Hz red pilot light control unit, Class 9001 Type KP1R31120V. For other voltages, refer to Class 9001 Type KP.
[4] Also requires an N.O. auxiliary contact for the holding circuit contact when used on Class 8903 electrically held lighting contactors.
[5] For control unit kits for Class 8903 mechanically held contactors, refer to Mechanically Held, page 16-81.
[6] To mount a control unit in a NEMA 1 enclosure, a Class 9999 Type BLX bracket is also required.

© 2019 Schneider Electric
All Rights Reserved
11/20/2019

Courtesy of Steven Engineering, Inc - (800) 258-9200 - sales@steveneng.com - www.stevenengineering.com

Internal Auxiliary

External Single-Circuit Auxiliary Contact

Auxiliary Contacts for Manual and Magnetic Contactors and Starters

Internal Contacts

Class 9999 Type SX11 internal contact kit is a replacement unit for the N.O. holding circuit contact supplied as standard on Type S Sizes 00–2 three phase starters and contactors. The Class 9999 Type SX12 is a replacement unit for the N.C. electrical contact which is furnished as standard on Type S, Sizes 00–2 mechanically interlocked devices (e.g., Class 8736 reversing starters). Internal contacts are also used on Class 2510 Types M & T manual starters. The internal contacts can be used for other applications as long as the electrical rating is not exceeded. See Table 16.351 for electrical ratings.

External Contacts

Class 9999 Type SX6 external auxiliary contact is supplied as standard for the N.O. holding circuit contact on Type S Sizes 3–7 starters and contactors. Additional auxiliary contacts can be added to Type S contactors, starters and lighting contactors. These contacts mount on either side of the basic contactor and are available with convertible or non-convertible contacts. The contacts of the convertible version can be changed from N.O. to N.C. or vice versa in the field. The non-convertible version has fixed contacts, either N.O. or N.C.

To determine the number of auxiliary contacts that can be added to each Type S contactor or starter, refer to the Class 8536 or Class 8736 section.

See Table 16.351 for electrical ratings.

Table 16.351: Maximum Ratings for Type S Auxiliary Contacts and Timers

Class 9999 Type	Contact Ratings				Class 9999 Type	Contact Ratings			
	Volts AC	AC Only (35% Power Factor)		Continuous		Volts AC	AC Only (35% Power Factor)		Continuous
		Make	Break				Make	Break	
SX11, SX12	120 or Less	30 A	3 A	3 A	SX6-SX10 SX13-SX17	120 or Less	60 A	6 A	10 A
	120-600	3600 VA	360 VA	3 A		120–600	7200 VA	720 VA	10 A

Table 16.352: Class 8502, 8536 and 8903 Type S

For Use With		Kit Description	Ordering Information
Type	NEMA Size		Class 9999 Type
External—Field Convertible			
SA-SJ	00–7	1-N.O. Contact 1-N.C. Contact 1-N.O. and 1-N.C. Isolated Contacts 1-N.O. Overlapping Contact 1-N.C. Overlapping Contact	SX6 SX7 SX8 SX9 *[7]* SX10 *[7]*
External—Non-Convertible			
SA-SJ	00–7	1-N.O. Contact 1-N.C. Contact 1-N.O. & 1 N.C. Isolated Contacts 1-N.O. Overlapping Contact 1-N.C. Overlapping Contact	SX13 SX14 SX15 SX16 *[7]* SX17 *[7]*
Internal—Non-Convertible			
SA-SD	00–2	1-N.O. Contact 1-N.C. Contact	SX11 *[8]* SX12 *[8]*

Table 16.353: Class 8965 Reversing/Hoist Contactors—Auxiliary Contacts

Device To Be Serviced	Auxiliary Contact Kit		
Class 8965 Type	Contact Arrangement	Type of Connector	Class 9999 Type
DPR	1 N.O.	Screw/ Quick-Connect	D10
	1 N.C.		D01
	1 N.O./1 N.C.		D11
	2 N.O.		D20
RO2 & RG2 RO10 Form X1 RO11 Form X1	1 N.O. each side	Slip-on	R10
RO3 & RG3 RO10 Form X2 RO11 Form X2	1 N.C. each side		R11
RO5 & RG5 RO12 Form X1 RO13 Form X1	1 N.O. each side	Screw	R12
RO6 & RG6 RO12 Form X2 RO13 Form X2	1 N.C. each side		R13

Table 16.354: Class 8910 and 8911 Definite Purpose Contactors and Starters—Auxiliary Contacts

Device To Be Serviced	Auxiliary Contact Kit		
Class 8910 or 8911 Type	Contact Arrangement	Class 9999	
		Series B (20-90 A)	Series C (20-40 A)
DPA DPS	1 N.O.	D10	DD10
	1 N.C.	D01	DD01
	1 N.O./1 N.C.	D11	DD11
	2 N.O.	D20	DD20

Table 16.355: How to Order

To Order Specify:	Catalog Number	
	Class	Type
• Class Number • Type Number	9999	SX6

[7] Types SX9 and SX10 or Types SX16 and SX17 must be used together and mounted on the same side of the contactor. They are suitable for applications where it is necessary for a normally open contact to overlap a normally closed contact.

[8] Types SX11 and SX12 are not for use on NEMA Sizes 3 or larger. Internal contacts can also be used on Class 2510 Types M and T manual starters.

© 2019 Schneider Electric
All Rights Reserved
11/20/2019

Courtesy of Steven Engineering, Inc - (800) 258-9200 - sales@steveneng.com - www.stevenengineering.com

Motor Logic—Class 9999

Isolated Auxiliary Contacts for Motor Logic Overload Relays

Overload relay auxiliary contacts are available factory installed or in kit form for field installation on Motor Logic overload relays. These contacts may be used for isolated alarm contact applications.

Table 16.356: Isolated Auxiliary Contacts for Motor Logic Overload Relays

For Use With		Parts Kit Description	Class 9999 Type
Class & Type	NEMA Size *[9]*		
8536 SA-SJ	00B through 7	N.O. or N.C. Auxiliary Contact (Field Convertible)	AC04
9065 SS, SR, SF, ST	00B through 7		

Table 16.357: DIN Adapter

For Use With		Parts Kit Description	Class 9999 Type
Class & Type	NEMA Size*[9]*		
9065 SS or SF	00B, 00C, 0, and 1	DIN Adapter	DA01

Table 16.358: Lug-Lug and Lug-Extender Kits

For Use With		Parts Kit Description	Class 9999 Type
Class & Type	NEMA Size*[9]*		
9065 SS or SF	00B, 00C, 0, and 1	Lug-Lug Kit for separate mounting	LL0
9065 SS or SF	00B, 00C, 0, and 1	Lug-Extender Kit for retrofitting existing NEMA S starters	LB0

DIN Adapter

The DIN adapter provides a method to mount the Motor Logic overload relay to a 35 mm DIN rail.

Lug-Lug and Lug-Extender Kits

A Class 9999 LL0 Lug-Lug Kit can be field installed on separately mounted overload relays. The standard Size 00B, 00C, 0, and 1 Class 9065 Type SS and SF overload relays are supplied without lugs. A Class 9999 LB0 Lug-Extender Kit is designed for Size 00B, 00C, 0, and 1 Retrofit Starter Applications. This kit allows the lugs to be in the same location as the Class 9065 melting alloy overload relay, eliminating the need for additional wire length.

Remote Reset Module

The Remote Reset Module can be easily field installed on solid-state overload relays. This module will allow the overload relay to be reset from a remote location.

Table 16.359: Remote Reset Module

For Use With		Parts Kit Description	Class 9999 Type
Class and Type	NEMA Size*[9]*		
536 SA-SJ	00B through 7	Remote Reset Module	RR04*[10]*
9065 SS, SR, SF, ST	00B through 7		
8536 SE-SF	3 and 4	Top Mounting Bracket	RB34*[10][11]*
9065 SS, SR, SF, ST	3 and 4		

Class 9999 Type SB6
Single Power Pole Adder

Class 9999 Type SB9
Double Power Pole Adder

Power Pole Adders

One single- or double-circuit power pole kit can be field added to a basic two- or three-pole Type S contactor or starter Sizes 0, 1 and 2, or lighting contactors 30–60 A. See Table 16.360 for selection. The ratings for these power pole adders correspond to the NEMA contact ratings found on page 16-122. A two- or three-pole contactor or starter accepts only one single- or double-circuit unit. A power pole cannot be used on four- or five-pole devices, or on devices that are mechanically interlocked.

When adding a power pole to a Size 0 or 1 device, remove the return springs according to the instructions that come with the device.

When adding a power pole to a Size 2 or 60 A device, a coil change is required. Select a four- or five-pole coil from page 16-122, or specify Form Y118 as noted in the footnote below.

When adding Size 0–2 power pole kits to a Size 3–7 or 100–800 A device, an adapter bracket (9999 SBT1) is required. The Class 9999 Types SB6–SB15 power pole kits are suitable for copper wire only. Types SB21–SB25 come with lugs suitable for copper or aluminum wire.

Table 16.360: Power Pole Adders—Selection

For Use With		Power Pole Adder Kit	
Type	Size	Description	Class 9999 Type
SB, SC, and SM	0, 1, and 30 A	One N.O. power pole adder	SB6
SD	2		SB11 *[12]*
SP	60 A		SB21 *[12]*
SB, SC, and SM	0, 1, and 30 A	One N.C. power pole adder	SB7
SD	2		SB12 *[12]*
SP	60 A		SB22 *[12]*
SB, SC, and SM	0, 1, and 30 A	One N.O. and one N.C. power pole adder	SB8
SD	2		SB13 *[12]*
SP	60 A		SB23 *[12]*
SB, SC, and SM	0, 1, and 30 A	Two N.O. power pole adders	SB9
SD	2		SB14 *[12]*
SP	60 A		SB24 *[12]*
SB, SC, and SM	0, 1, and 30 A	Two N.C. power pole adders	SB10
SD	2		SB15 *[12]*
SP	60 A		SB25 *[12]*
SE–SJ and SQ–SZ and SJ	3–7 and 100–800 A	Adapter bracket	SBT1

[9] Size 00B and 00C are not actual NEMA sizes. These designations are used to differentiate the lower FLA of these devices from the NEMA Size 00 Motor Logic solid-state overload relay.
[10] 120 Vac power required.
[11] For mounting the remote reset module on the top of the overload relay.
[12] To order a Size 2 or 60 A power pole kit complete with a new starter coil, specify **Form Y118,** the voltage, and the frequency (for example, Class 9999 Type SB11 **Y118,** 120 V, 60 Hz).

© 2019 Schneider Electric
All Rights Reserved
11/20/2019

Courtesy of Steven Engineering, Inc - (800) 258-9200 - sales@steveneng.com - www.stevenengineering.com

Class 9999 Type SF4
Fuse Kit

Control Circuit Fuse Holder

The control circuit fuse holder is designed to be used on Type S contactors and starters, Sizes 00–7, when either one or two control circuit fuses, 600 V maximum, are required. The Type SF3 and SF4 fuse holders will accept standard 600 V Bussmann Type KTK or equivalent fuses (13/32" x 1-1/2"); 6 A maximum. The SFR3 and SFR4 will accept Class CC 600 V Bussmann Type KTK-R or equivalent fuses only.

Table 16.361: Control Circuit Fuse Holder—Selection

Description (fuses not included)	Class 9999 Type
Single Fuse Unit	SF3
Single Fuse Unit for Class CC Fuse	SFR3
Two Fuse Unit	SF4
Two Fuse Unit for Class CC Fuses	SFR4

Class 9999 Type ST1
Transient Suppression Module

Transient Suppression Module

The transient suppression module is designed to be used where the transient voltage, generated when opening the coil circuit, interferes with the proper operation of nearby integrated or solid-state control circuits. The module consists of an RC circuit and is designed to suppress the coil voltage transients to approximately 200% of peak coil supply voltage. The module is wired across the coil for Type S, Sizes 00–5 and is designed for coil voltages of 120 V only.

Table 16.363: Transient Suppression Module—Selection

Description	Class 9999 Type
For Sizes 00–2	ST1
For Sizes 3–5	ST2

Table 16.362: How to Order

To Order Specify:	Catalog Number	
	Class	Type
• Class Number • Type Number	9999	SM1

Type SO4

Isolated Alarm Contacts For Melting Alloy Overload Relays

Isolated overload relay alarm contacts are available factory-installed or in kit form for field installation in NEMA Size 00–6 Type S*[13]* starters, and Class 9065 Type SE melting alloy overload relays. NEMA Size 7 Type S devices use a solidstate overload relay which has isolated alarm contacts as a standard feature. The alarm contacts allow the starter to be used in applications that require isolated contacts, such as inputs to a computer.

Class 9999 Types SO4 and SO5 modules are interchangeable with the standard module (Class 9998 Type SO1) and can be installed on starters already in service. The case is made of clear plastic (polycarbonate) to allow for visual inspection of contacts.

Table 16.364: Contact Unit for Melting Alloy Overload Relays

Magnetic Starter		Parts Kit Description	Class 9999 Type
NEMA Size	Type		
00-6 *[13]*	SA-SH	N.O. Isolated Alarm Contact Plus Standard N.C. Overload Contact	SO4
		N.C. Isolated Alarm Contact Plus Standard N.C. Overload Contact	SO5

Solid Neutral

The Class 9999 Type SN kit can be used on Class 8903 Type S lighting contactors and other controllers where field addition of a solid neutral is required. Each kit has lugs suitable for both copper and aluminum wire, and mounts with two screws.

Table 16.365: Solid Neutral Selection

Number of Lugs	Wire Capacity Per Lug (Cu/Al)	Class 9999 Type
4	14–2/0	SN1
3	one 4–600 MCM or two 1/0–250 MCM	SN2
3 (Dual)	two 2–600 MCM	SN3
2 (Dual)	two 6–350 MCM	SN4

Tie Point Terminal Block

Tie Point Terminal Block

The tie point terminal block provides easy wiring of a Hand-Off-Auto selector switch or Start-Stop push buttons with separate control. The T7 terminal block requires no panel space. It simply snaps on Sizes 00–4 Type S contactors and starters by two tabs and is secured to the left hand coil terminal.

Table 16.367: Tie Point Terminal Block Selection

Magnetic Contactor or Starter		Class 9999 Type
NEMA Size	Type	
00–4	SA-SF	T7

Table 16.366: How to Order

To Order Specify:	Catalog Number	
	Class	Type
• Class Number • Type Number	9999	SO4

[13] Isolated alarm contacts **cannot** be added in the field to the Size 5 Type S starter. Current transers and a Size 1 overload block must be used. For factory installation specify **Form Y342**.

© 2019 Schneider Electric
All Rights Reserved
11/20/2019

Courtesy of Steven Engineering, Inc - (800) 258-9200 - sales@steveneng.com - www.stevenengineering.com

Type SM1

Type SM12

Mechanical Interlock

General: Type S contactors or starters can be mechanically interlocked so that only one device is energized at a time. The mechanical interlock is an interference (non-jamming) type, locking at the beginning of the stroke of any starter or contactor.

Type S Sizes 00, 0, 1, and 2—The mechanical interlock is mounted on the underside of the reversing baseplate. Two pins extend from the mechanical interlock through openings in the baseplate and engage the contact carrier of each contactor. Two styles of mechanical interlocks are used: one version for three pole contactors, a different version for four or five pole contactors. *When adding a power pole to the left side of an existing Size 0, 1, or 2 three-pole reversing contactor, a new mechanical interlock must also be installed. When added to the right side only, the power pole is not mechanically interlocked with the left-hand contactor.*

Type S Sizes 3 and 4—The mechanical interlock is separate from the mounting pan on Sizes 3 and 4. Cams on the mechanical interlocks are operated by the contact carrier of each contactor. The mechanical interlock is attached to the underside of the two contactor baseplates on Sizes 3 and 4.

NOTE: The mechanical interlock kits in Table 16.368 can be used to interlock 2–5 pole contactors. Mechanical interlocks for horizontal and vertical arrangement are listed in various pole arrangements.
Mechanical interlock Types SM1 through SM10 for Sizes 00-2 devices use overload relay mounting brackets to support the overload relay portion of the starter. See Table 16.369.

Table 16.368: Mechanical Interlock for Two Contactors

			Contactor NEMA Size	Class 9999 Type
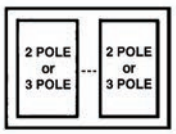 Horizontal Type SM1 for Size 00–1 Type SM6 for Size 2 Type SM12 for Sizes 3 & 4	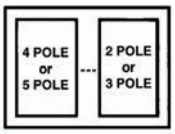 Horizontal Type SM2 for Size 0 or 1[14] Type SM7 for Size 2 Type SM12 for Sizes 3 & 4	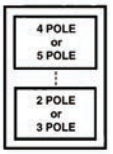 Vertical Type SM2 for Size 0 or 1[14] Type SM10 for Size 2 Type SM11 for Size 3 Type SM13 for Size 4	00, 0, 1 0, 1 0, 1 0, 1 0, 1	SM1 SM2 SM3 SM4 SM5
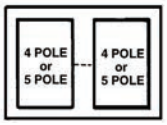 Horizontal Type SM3 for Size 0 or 1 Type SM8 for Size 2 Type SM12 for Sizes 3 & 4	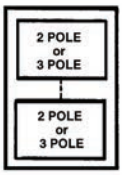 Vertical Type SM4 for Size 0 or 1 Type SM9 for Size 2 Type SM11 for Size 3 Type SM13 for Size 4	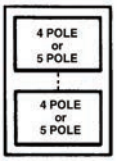 Vertical Type SM5 for Size 0 or 1 Type SM11 for Size 3 Type SM13 for Size 4	2 2 2 2 2 3 3, 4 4	SM6 SM7 SM8 SM9 SM10 SM11 SM12 SM13

Overload Relay Mounting Bracket

Table 16.369: Overload Relay Mounting Bracket

Kit Description	Class 9999 Type
Bracket for one overload relay used with horizontal mechanical interlocks, Types SM1 through SM10	SO11
Bracket for two overload relays used with vertical mechanical interlocks, Types SM2, SM4, SM5, SM9 and SM10	SO12

Table 16.370: How to Order

To Order Specify:	Catalog Number	
	Class	Type
• Class Number • Type Number	9999	SM1

[14] The Type SM2 interlock is factory assembled for horizontal mounting, but can easily be converted to vertical mounting. Conversion instructions are included.

© 2019 Schneider Electric
All Rights Reserved
11/20/2019

Courtesy of Steven Engineering, Inc - (800) 258-9200 - sales@steveneng.com - www.stevenengineering.com

Class 9422 TC33 Fuse Block

Class 9999 Type TC10

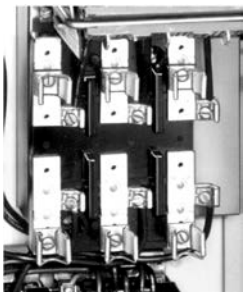

Class 9999 Type S2
Interchangeable Fuse Clips

Fuse Block Replacement Parts Kits

Class 8538 (Series D and newer), Class 8738 (Series E and newer), and Class 8903 (Series C and newer) Type S non-fusible combination starters and lighting contactors (sizes 0–2, 30 to 60 A) can be converted to the fusible type by installing a Class 9422 Fuse Clip Kit. Both fusible and non-fusible combination devices have the same size enclosure in NEMAs 1, 4, and 12 construction, which permits this conversion. The 9422 Fuse Clip Kits contain line and load fuse clips, load base, and fuse pullers.

Table 16.371: Class 9422 Replacement Fuse Clip Kits

Device Used on	Disconnect Ampere Rating	NEMA Class H, K, J, R Fuses			Class R Fuse Clip Kits
		Fuse Clip Ratings (A)		Class and Type	
Size or Ampere Rating		250 V Max.	600 V Max.		
0, 1, and 30 A	30	0–30	—	9422TC30 *[15]*	RFK03 *[16]*
0, 1, and 30 A	30	31–60	0–30	9422TC33 *[15]*	RFK06 *[16]*
2 and 60 A	60	31–60	0–30	9422TC33	RFK06 *[16]*
2 and 60 A	60	—	31–60	9422TD63	RFK06H *[16]*

Table 16.372: Class 9999 Replacement Fuse Clip Kits (8538 Pre-Series D, 8738 Pre-Series E)

Device Used on	Disconnect Ampere Rating	NEMA Class H Fuses			NEMA Class R Fuses			NEMA Class J Fuses	
		Fuse Clip Ratings (A)		Type	Fuse Clip Ratings (A)		Type	Fuse Clip Ratings (A) 600 V Max.	Type
Size or Ampere Rating		250 V Max.	600 V Max.		250 V Max.	600 V Max.			
0, 1, and 30 A	30	0–30 — 31–60	— 0–30 0–30	S1 S2 S2	0–30 — 31–60	— 0–30 0–30	SR1 SR2 SR2	— 0–30 0–30	— SJ2 SJ2
2 and 60 A	60	31–60 —	0–30 31–60	S2 S3	31–60 —	0–30 31–60	SR2 SR3	0–30 31–60	SJ2 SJ3
3 and 100 A	100	61–100 101–200	61–100 —	S4 *[17]* S5 *[17]*	61–100 101–200	61–100 —	SR4 *[18]* SR4 *[18]*	61–100 —	SJ4 —
4 and 200 A	200	101–200	101–200	S5 *[17]*	101–200	101–200	SR4 *[18]*	—	—
5 and 300 A	400	—	—	—	201–400	201–400	SR5 *[18]*	—	—
6 and 400, 600 A	600	—	—	—	401–600	401–600	SR5 *[18]*	—	—

Table 16.373: Class 9999 Auxiliary Contact Kits for Disconnect Switches and Circuit Breakers

Class	Type	SPDT Type	DPDT Type
8538, 8738	SB, SC (Series C)	R45	R46
8539, 8739	SB, SC, SD, SE, SF, SG	R26	R27
8538	SBA, SCA, SBG, SCG (Series K)	TC11	TC21
8738	SBA, SCA, SBG, SCG (Series K)	TC10	TC20
8538	SB*[19]*, SC*[19]*, SD*[19]* (Series B)	R6	R7
8538	SBAS8, SCAS8, SBGS8, SCGS8, (Series K)	TC10	TC20
8538, 8738	SD (Series C)	R43	R44
8538	SDA, SDA*[19]*, SDG, SDG*[19]* (Series K)	TC10	TC20
8738	SDA, SDG (Series K)	TC10	TC20
8538, 8738	SE (Series B and C)	R41	R42
8538, 8738	SE, SF (Series A)	R8	R9
8538, 8738	SF (Series B and C)	R39	R40
8538, 8738	SG	R35	R36

Class	Type	SPDT Type	DPDT Type
Disconnect Switches			
9422	BTCF, BTCN, BTDF, BTEF, BTEN	TC11	TC21
9422	TCF, TCN, TDF, TDN, TEF, TEN	TC10	TC11
9422	TF	R8	R9
Circuit Breaker Operating Mechanisms			
9421	LF, LK, LL, LM, LN, LP, LR, LT, LW	R47	R48
9422	RM, RN, RP, RQ, RR, RT	R26	R27
9422	CFA, CKA, CLA, CSF, CMP	R26	R27

Table 16.374: How to Order

To Order Specify:	Catalog Number	
	Class	Type
• Class Number • Type Number	9999	R6

[15] When using with a 9422FTCN or FTCF disconnect switch in Class 8538 or 8738 combination starters, remove and discard the metal base plate.
[16] No Class number required. Discount schedule DE1.
[17] Cannot be used in Series B or newer 8538 devices.
[18] Fuse clips are not provided in the Type SR4 and SR5 kits. On new installations, Class 9999 Type S fuse clips must also be purchased. Three non-removable pins are included and can be installed only in the latest production devices, which have a hole in the lower fuse clips.
[19] Class 8538 Type numbers ending in suffix **S8**.

© 2019 Schneider Electric
All Rights Reserved

Courtesy of Steven Engineering, Inc - (800) 258-9200 - sales@steveneng.com - www.stevenengineering.com

General

All tables are based on the operation of the motor and controller in the same ambient temperature, 40 °C (104 °F) or less. Always be certain the correct thermal units are installed in the starter before operating the motor. Each thermal unit shall be installed such that its catalog number is visible. See page 16-136 for information on installing thermal units. On melting alloy thermal units the ratchet wheel must engage the pawl assembly.

Selection Procedure

1. Determine motor data:
   a. Full load current rating
   b. Service factor
      NOTE: If motor full load current (FLC) is not known, a tentative thermal unit selection could be made, based on horsepower and voltage. Refer to page 16-136.
2. Motor and controller in *same ambient temperature:*
   a. All starter classes, except Class 8198:
      1. For 1.15 to 1.25 service factor motors use 100% of motor FLC for thermal unit selection.
      2. For 1.0 service factor motors use 90% of motor FLC for thermal unit selection.
   b. Class 8198 only:
      1. For 1.0 service factor motors use 100% of motor FLC for thermal unit selection.
      2. For 1.15 to 1.25 service factor motors use 110% of motor FLC for thermal unit selection.
3. Motor and controller in *different ambient temperatures:*
   a. Multiply motor FLC by the multiplier in Selection of Thermal Units for Special Applications, page 16-132. Use the resultant full load current for thermal unit selection.
4. Locate the proper selection table from the index, pages page 16-133 and page 16-134.
   a. The proper thermal unit number will be found adjacent, to the right of the range of full load currents in which the motor FLC or resultant full load current falls.
5. See page 16-135 for calculation of trip current rating.

Slow Trip Thermal Unit Selection

To select Type SB slow trip thermal units, the selection table for a standard Type B thermal unit may be used with the following modifications: For continuous rated motors having service factors of 1.15 to 1.25, select thermal units from the standard Type B table using 93% (102% for Class 8198) of the full load current shown on the motor nameplate and then substitute an SB for the B in the thermal unit type number.

Example: A motor with a full load current of 12 A controlled by an 8536SCG3 would require B22 thermal units for standard trip applications and SB19.5 thermal units for slow trip applications. The SB is selected by multiplying 12 A times 93% for 11.16 A and using this value to select B19.5. Then add the S prefix to arrive at SB19.5.

For continuous rated motors having a service factor of 1.0, select thermal units in the same manner using 84% (93% for Class 8198) of full load current shown on the motor nameplate.

NOTE: SB thermal units are used on Size 0, 1, 2, and only some Size 3 applications. Check thermal unit tables for current ranges.

Table 16.375: Thermal Unit Trip Types

Melting Alloy	
Type of Trip	Thermal Unit Type
Standard	A
	B
	C
	CC
	DD
Quick	FB
Slow	SB

Table 16.376: Selection of Thermal Units for Special Applications

Class of Controller	Continuous Duty Motor Service Factor	Melting Alloy		
		Ambient Temperature of Motor		
		Same as Controller Ambient	Constant 10 °C (18 °F) Higher Than Controller Ambient	Constant 10 °C (18 °F) Lower Than Controller Ambient
		Full Load Current Multiplier		
All Classes, Except 8198	1.15 to 1.25	1.0	0.9	1.05
	1.0	0.9	0.8	0.95
Class 8198	1.15 to 1.25	1.1	1.0	1.15
	1.0	1.0	0.9	1.05

© 2019 Schneider Electric
All Rights Reserved
11/20/2019

Courtesy of Steven Engineering, Inc - (800) 258-9200 - sales@steveneng.com - www.stevenengineering.com

Thermal Unit Selection

NOTE: For thermal unit selection tables for other devices including obsolete devices, consult the Customer Care Center at 1-888-778-2733.

Table 16.377: Thermal Unit Selection

Controller					Thermal Unit Selection Table Number Hand Reset Melting Alloy		
Starter Type	Class	Type	Series[1]	Size	Standard Trip (20)	Quick Trip (10)	Slow Trip (30)
Manual Starters FHP	2510 2512 8908	F	A	FHP	43 [2]	—	—
Manual Starters (Small Enclosure)	2510	M, T	A	M–0 M–1 M–1P	1 1 1	72 72 72	[3] [3] [3]
Manual Starters (Large Enclosure)	2510 2511 2512 8925	M, T	A	M–0 M–1 M–1P	2 2 2	73 73 73	[3] [3] [3]
DC Magnetic Starters EC & M Crane Control Product	7135 7136 7735 7736	C, D	—	1, 2	65	—	[3]
		E	—	3	9	—	—
		F	—	4	10	—	—
		G	—	5	12	—	—
AC Magnetic Starters (Small Enclosure)	8536 8904 [4] (Starter In Own Enclosure) 8933 8998 8999 (Model 3 Control Center) I-LINE® and QMB Motor Starter Centers	A (8536 only)	B, C	00	17 [2]	—	—
		SA	A, B	00	13	—	[3]
		SB	A	0	13	74	[3]
		SC	A	1	13	74	[3]
			A	1P	41	—	[3]
		SD	A	2	56	75	[3]
		SE	A	3	18	76 [5]	134 [3][5]
		SF	A	4	54	—	—
		SG	A	5	49	—	—
			B [6]	5	59	83	—
		SH	A, B	6	21	—	—
	8998 8999 (Model 4 Control Center)	SC	A	1 Fusible	66	74	—
				1 Circuit Breaker	15	74	—
		SD	A	2 Fusible	67	75	—
				2 Circuit Breaker	58 [7]	75	—
		SE	A	3 Small Enclosure	16	76 [5]	134 [3][5]
				3 Large Enclosure	68 [7]	76 [5]	133 [3][5]
		SF	A	4	61	—	—
		SG	A	5	24	—	—
		SH	A	6	20	—	—
	8998 (Model 5 and Model 6 MCCs)	SC [8]	A	1	109	—	—
				1 COMPAC 6	104	—	—
		SD [8]	A	2	110	—	—
		SE [8]	A	3	111	—	—
		SF [8]	A	4	112	—	—
		SG [8]	A	5	113	—	—
			B	5 CT	103	—	—
		SH [8]	A	6	114	—	—
	8911	DPSG	C	20–30 A	135	—	—
				40 A	145	—	—
			A	50 A	146	—	—

(table continued on the next page)

NOTE: For thermal unit selection tables for other devices, including obsolete devices, consult the Customer Care Center at 1-888-778-2733.

[1] Series letters listed refer to the marking on the nameplate of the basic openstyle starter. When the starter comes in a controller containing other devices, the controller may have a different series letter marked on the enclosure nameplate.
[2] Type A thermal units for full-load currents lower than those listed in this table are available. For complete information, consult Customer Care Center at 1-888-778-2733.
[3] This device will accept Type SB slow trip (Class 30) thermal units. For selection, see page 16-132.
[4] Small enclosure tables apply for **Class 8904** non-combination and non-reversing starters. For combination and reversing **Class 8904** starters, refer to the large enclosure selections, index above.
[5] **Form Y81** must be specified to use quick trip (Class 10) or slow trip (Class 30) thermal units on Size 3 starters.
[6] Divide the motor FLC by 60, and use this quotient to select the appropriate thermal units.
[7] Use for autotransformer starters (fusible and circuit breaker).
[8] Refers to the Type number of the starter in the MCC, not the Type number of the MCC.

© 2019 Schneider Electric
All Rights Reserved
11/20/2019

Courtesy of Steven Engineering, Inc - (800) 258-9200 - sales@steveneng.com - www.stevenengineering.com

Thermal Unit Selection

Table 16.378: Thermal Unit Selection

Controller					Thermal Unit Selection Table Number Hand Reset Melting Alloy		
Starter Type	Class	Type	Series[9]	Size	Standard Trip (20)	Quick Trip (10)	Slow Trip (30)
AC Magnetic Starters (Large Enclosure)	8198	G, S	—	—	5	—	[10]
	8536 (Starter Used in Multi-Motor Panel)	A (8536 only)	B, C	00	14 [11]	—	—
	8538 8904[12]	SA	A, B	00	53	—	[10]
	8539 8906	SB, NB	A	0	15	78	[10]
	8606 8907	SC, NC	A	1	15	78	[10]
	8630 [13] 8920	SD, ND	A	2	58	79	[10]
	8640 [14] 8922	SE, NE	A	3	16	80 [15]	133 [15][10]
	9089 8924	SF, NF	A	4	61	—	—
	8647 8925	SG	A	5	24	—	—
	8650 8930		B [16]	5	59	83	—
	8736 8941 8738 8739	SH	A, B	6	20	—	[10]
	8810 8811 8812	CB, DB, SB, UB	A	0	15	78	[10]
		CC, DC, SC, UC	A	1	15	78	[10]
		CD, DD, SD, UD	A	2	58	79	[10]
		CE, DE, SE, UE	A	3	16	80 [15]	133 [15][10]
		CF, DF, SF, UF	A	4	61	—	—
		CG, DG, SG, UG	A	5	24	—	—
			B [16]	5	59	83	—
		CH, DH, SH, UH	A	6	20	—	[10]
	8940 WELL-GUARD™ Control	WC, XC	A	1	13	78	—
		WD, XD, MD, RD, VD	A	2	56	79	—
		WE, XE, ME, RE, VE	A	3	18	80 [15]	—
		PF, WF, XF, MF, RF, VF, PE	A	4	54	—	—
	8911	DPSO	C	20–30 A	136	—	—
				40 A	147	—	—
			A	50 A	148	—	—
AC Magnetic Part-Winding	8998 (Model 5 and Model 6 MCCs)	SC [17]	A	1	127	—	—
		SD [17]	A	2	128	—	—
		SE [17]	A	3	129	—	—
		SF	A	4	105	—	—
		SG	A	5	115	—	—
			B [16]	5 CT	116	—	—
Separately Mounted Overload Relays	9065	C	A	1 (25 A)	44	82	[10]
		F	B	4 (133 A)	19	—	—
		G	A	5 (266 A)	22	—	—
		MEO	A	(32 A)	86	—	—
		S	A	1 (26 A)	59	83	[10]
				2 (45 A)	69	84	[10]
				3 (86 A)	34	—	—
				4 (133 A)	28	—	—
		T	A	2 (45 A)	31	—	[10]
		U	—	3 (86 A)	40	—	—

NOTE: For thermal unit selection tables for other devices including obsolete devices, consult the Customer Care Center at 1-888-778-2733.

[9] Series letters listed refer to the marking on the nameplate of the basic openstyle starter. When the starter comes in a controller containing other devices, the controller may have a different series letter marked on the enclosure nameplate.
[10] This device will accept Type SB slow trip (Class 30) thermal units. For selection, see page 16-132.
[11] Type A thermal units for full-load currents lower than those listed in this table are available. For complete information, consult Customer Care Center at 1-888-778-2733.
[12] Large enclosure tables apply for **Class 8904** combination and reversing starters. For non-combination and non-reversing **Class 8904** starters refer to small enclosure selections, page 16-133.
[13] For **Class 8630** starters, divide the delta-connected motor full-load current by 1.73, and use this quotient to select thermal units.
[14] For **Class 8640** and **Class 8940**starters (MD, PD, ME, PE, MF, PF, MG and PG), use the full-load current of each motor winding as a basis for thermal unit selection—normally one-half the total motor current.
[15] **Form Y81** must be specified to use quick trip (Class 10) or slow trip (Class 30) thermal units on Size 3 starters.
[16] Divide the motor FLC by 60, and use this quotient to select the appropriate thermal units.
[17] Refers to the Type number of the starter in the MCC, not the Type number of the MCC.

© 2019 Schneider Electric
All Rights Reserved
11/20/2019

Courtesy of Steven Engineering, Inc - (800) 258-9200 - sales@steveneng.com - www.stevenengineering.com

Calculation of the Trip Current Rating

Trip Current Rating—The trip current rating is a nominal value that approximates the minimum current to trip an overload relay in an ambient temperature, outside of the enclosure, of 40 °C (104 °F). In all selection tables except Class 8198, the trip current rating is 1.25 times the minimum full load current shown for the thermal unit selected. For Class 8198, the trip current rating is 1.15 times the minimum full load current. This applies to bimetallic overload relays with the trip adjustment set at 100 percent.

Calculation Procedure

1. Use the selection table for the specific controller involved.
2. Find the minimum motor full load current listed for the thermal unit in question.
3. Multiply that current by 1.25 (1.15 for Class 8198). The result is the trip current rating.

Example 1: Determine the thermal unit selection and trip current rating for thermal units in a Class 8536 Type SCG3 Size 1 magnetic starter used to control a three-phase, 1.15 service factor motor with a full load current of 17.0 Amperes, where the motor and controller are both located in a 40°C (104°F) ambient temperature.

1. From Table 13 the proper selection is B32.
2. The minimum motor full load current is 16. 0 Amperes.
3. Trip current rating is 16.0 x 1.25= 20.0 Amperes.

Protection Level is the relationship between trip current rating and full load current. Protection level, in percent, is the trip current rating divided by the motor full load current times 100. In Example 1 the protection level for the B32 thermal unit is: 20.0/17.0 x 100= 118%.

National Electrical Code, Section 430-32, allows a maximum protection level of 125% for the motor in the above example.

Minimum Trip Current (also called ultimate current) may vary from the trip current rating value, since ratings are established under standardized test conditions. Factors which influence variations include: the number of thermal units installed, enclosure size, proximity to heat producing devices, size of conductors installed, ambient (room) temperature, and others.

Except for ambient temperature-compensated overload relays, an ambient temperature higher than 40°C would lower the trip current, and a lower temperature would increase it. This variation is not a factor in selecting thermal units for the average application, since most motor ratings are based on an ambient temperature of 40 °C, and motor capacity varies with temperature in about the same proportion as the change in trip current. Temperature-compensated relays maintain a nearly constant trip current over a wide range of ambient temperature, and are intended for use where the relay, because of its location, cannot sense changes in the motor ambient temperature.

Calculation of the Trip Current for Ambient Temperatures Other Than 40 °C

For a controller ambient temperature other than 40 °C (104 °F) trip current can be calculated by applying a correction factor from the curve in
Figure 1. The approximate trip current for a particular ambient temperature is the product of (1) the multiplier M corresponding to the temperature and (2) the 40 °C trip current rating.

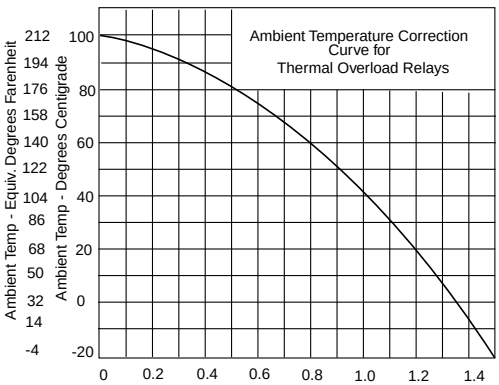

NOTE: Ambient temperature is the temperature surrounding the starter enclosure. Normal temperature rise inside the enclosure has been taken into account in preparing the thermal unit selection tables.

Example 2: Determine the trip current for the motor and controller in Example 1, except the controller is in a 30 °C (86 °F) ambient temperature. From the curve in Figure 1 the multiplier M is 1.1 at 30 °C. The approximate trip current is 16.0 × 1.25 × 1.1 = 22 A.

© 2019 Schneider Electric
All Rights Reserved
11/20/2019

Courtesy of Steven Engineering, Inc - (800) 258-9200 - sales@steveneng.com - www.stevenengineering.com

Approximate Thermal Unit Selection Based On Horsepower and Voltage

General—Thermal units selected using approximate full-load currents from Table 16.379 will provide a trip current between 101% and 125% of full-load current for many 4-pole, single speed, normal torque, 60 Hz motors. Since full-load current rating of different makes and types of motors vary so widely, these selections may not be suitable.

Thermal units should be selected on the basis of motor nameplate full-load current and service factor. Thermal unit sizes originally selected on an approximate basis should always be rechecked and corrected at the time of installation if required.

How to use Table 16.379:

- Locate the motor horsepower and voltage.
- Determine the approximate full-load current fromTable 16.379.
- Use the approximate full-load current in place of actual nameplate full-load current and follow the Selection Procedure on page 16-132.

Table 16.379: Use This Table Only When the Motor Full-Load Current Is Not Known

Motor Horsepower	Motor Full-Load Current					
	Three Ø				Single Ø	
	200 V	230 V	460 V	575 V	115 V	230 V
1/6	—	—	—	—	4.4	2.2
1/4	—	—	—	—	5.8	2.9
1/3	—	—	—	—	7.2	3.6
1/2	2.5	2.2	1.1	0.9	9.8	4.9
3/4	3.7	3.2	1.6	1.3	13.8	6.9
1	4.8	4.2	2.1	1.7	16	8
1-1/2	6.9	6.0	3.0	2.4	20	10
2	7.8	6.8	3.4	2.7	24	12
3	11.0	9.6	4.8	3.9	34	17
5	17.5	15.2	7.6	6.1	56	28
7-1/2	25.3	22	11	9	80	40
10	32.2	28	14	11	—	50
15	48.3	42	21	17	—	—
20	62.1	54	27	22	—	—
25	78.2	68	34	27	—	—
30	92	80	40	32	—	—
40	120	104	52	41	—	—
50	150	130	65	52	—	—
60	177	154	77	62	—	—
75	221	192	96	77	—	—
100	285	248	124	99	—	—
125	359	312	156	125	—	—
150	414	360	180	144	—	—
200	552	480	240	192	—	—

NOTE: These currents should not be used for selection of fuses, circuit breakers or wire sizes. See NEC tables 430-248 through 430-250. For motors rated 208-220 volts, use 230 V column. For motors rated 440 to 550 volts, use 460 and 575 V columns, respectively.

Mounting of the Thermal Units

Always be certain the correct thermal units are installed in the starter before operating the motor. Thermal units should always be mounted so that their type designation can be read from the front of the starter (see Figure 1). Melting alloy thermal units should be mounted so that the tooth of the pawl assembly can engage the teeth of the ratchet wheel when the reset button is pushed.

Mounting surfaces of starter and thermal units should be clean and care should be taken to insure that thermal unit mounting screws are fastened securely.

Figure 1

© 2019 Schneider Electric
All Rights Reserved
11/20/2019

Courtesy of Steven Engineering, Inc - (800) 258-9200 - sales@steveneng.com - www.stevenengineering.com

Thermal Unit Selection Tables

Thermal Unit Table 1

(index and instructions: page 16-132 to page 16-136)

Motor FLC (A)		Thermal Unit Number
1 T.U.	3 T.U.	
0.33–0.36	0.29–0.32	B 0.44
0.37–0.40	0.33–0.36	B 0.51
0.41–0.45	0.37–0.39	B 0.57
0.46–0.52	0.40–0.47	B 0.63
0.53–0.59	0.48–0.56	B 0.71
0.60–0.66	0.57–0.63	B 0.81
0.67–0.73	0.64–0.69	B 0.92
0.74–0.81	0.70–0.77	B 1.03
0.82–0.91	0.78–0.86	B 1.16
0.92–1.02	0.87–0.96	B 1.30
1.03–1.14	0.97–1.11	B 1.45
1.15–1.29	1.12–1.23	B 1.67
1.20–1.42	1.24–1.37	B 1.88
1.43–1.64	1.38–1.55	B 2.10
1.65–1.80	1.56–1.75	B 2.40
1.81–2.10	1.76–1.92	B 2.65
2.11–2.30	1.93–2.16	B 3.00
2.31–2.61	2.17–2.50	B 3.30
2.62–2.99	2.51–2.81	B 3.70
3.00–3.37	2.82–3.16	B 4.15
3.38–3.94	3.17–3.40	B 4.85
3.95–4.24	3.41–3.76	B 5.50
4.25–4.54	3.77–4.00	B 6.25
4.55–5.29	4.01–4.68	B 6.90
5.30–5.73	4.69–5.18	B 7.70
5.74–6.35	5.19–5.51	B 8.20
6.36–7.08	5.52–6.19	B 9.10
7.09–7.83	6.20–7.12	B 10.2
7.84–8.47	7.13–8.15	B 11.5
8.48–9.83	8.16–8.60	B 12.8
9.84–10.5	8.61–9.21	B 14.0
10.6–11.4	9.22–10.1	B 15.5
11.5–12.8	10.2–11.2	B 17.5
12.9–13.9	11.3–12.0	B 19.5
14.0–16.1	—	B 22.0
16.2–18.0	—	B 25.0
Following Selections for Size M-1 & M-1P Only.		
—	11.3–12.1	B 19.5
—	12.2–13.6	B 22.0
16.2–17.6	13.7–15.3	B 25.0
17.7–20.6	15.4–17.3	B 28.0
20.7–23.1	17.4–19.1	B 32.0
23.2–26.0	19.2–21.7	B 36.0
—	21.8–24.2	B 40.0
—	24.3–26.0	B 45.0
Following Selections for Size M-1P Only		
23.2–27.1	—	B 36.0
27.2–29.2	—	B 40.0
29.3–33.0	—	B 45.0
33.1–36.0	—	B 50.0

Thermal Unit Table 2

(index and instructions: page 16-132 to page 16-136)

Motor FLC (A)		Thermal Unit Number
1 T.U.	3 T.U.	
0.35–0.38	0.30–0.32	B 0.44
0.39–0.43	0.33–0.37	B 0.51
0.44–0.48	0.38–0.39	B 0.57
0.49–0.56	0.40–0.48	B 0.63
0.57–0.63	0.49–0.57	B 0.71
0.64–0.71	0.58–0.64	B 0.81
0.72–0.78	0.65–0.70	B 0.92
0.79–0.88	0.71–0.78	B 1.03
0.89–0.99	0.79–0.87	B 1.16
1.00–1.15	0.88–0.98	B 1.30
1.16–1.23	0.99–1.13	B 1.45
1.24–1.43	1.14–1.25	B 1.67
1.44–1.51	1.26–1.40	B 1.88
1.52–1.75	1.41–1.58	B 2.10
1.76–1.93	1.59–1.79	B 2.40
1.94–2.25	1.80–1.91	B 2.65
2.26–2.47	1.92–2.20	B 3.00
2.48–2.81	2.21–2.55	B 3.30
2.82–3.20	2.56–2.87	B 3.70
3.21–3.63	2.88–3.24	B 4.15
3.64–4.19	3.25–3.48	B 4.85
4.20–4.53	3.49–3.85	B 5.50
4.54–4.89	3.86–4.10	B 6.25
4.90–5.68	4.11–4.79	B 6.90
5.69–6.27	4.80–5.31	B 7.70
6.28–6.85	5.32–5.65	B 8.20
6.86–7.73	5.66–6.35	B 9.10
7.74–8.50	6.36–7.31	B 10.2
8.51–9.29	7.32–8.34	B 11.5
9.30–10.4	8.35–8.84	B 12.8
10.5–11.3	8.85–9.47	B 14.0
11.4–12.3	9.48–10.4	B 15.5
12.4–13.9	10.5–11.5	B 17.5
14.0–15.0	11.6–12.0	B 19.5
15.1–18.0	—	B 22.0
Following Selections for Size M-1 & M-1P Only.		
—	11.6–12.4	B 19.5
15.1–17.4	12.5–14.0	B 22.0
17.5–19.2	14.1–15.8	B 25.0
19.3–22.0	15.9–17.8	B 28.0
22.1–24.6	17.9–19.7	B 32.0
24.7–26.0	19.8–22.4	B 36.0
—	22.5–25.1	B 40.0
—	25.1–26.0	B 45.0
Following Selections for Size M-1P Only.		
24.7–29.1	—	B 36.0
29.2–31.7	—	B 40.0
31.8–36.0	—	B 45.0

© 2019 Schneider Electric
All Rights Reserved
11/20/2019

Courtesy of Steven Engineering, Inc - (800) 258-9200 - sales@steveneng.com - www.stevenengineering.com

Thermal Unit Table 3
(index and instructions: page 16-132 to page 16-136)

Motor FLC (A)		Thermal Unit Number
1 T.U.	3 T.U.	
0.29–0.31	0.28–0.29	B 0.44
0.32–0.36	0.30–0.33	B 0.51
0.37–0.39	0.34–0.36	B 0.57
0.40–0.47	0.37–0.44	B 0.63
0.48–0.56	0.45–0.52	B 0.71
0.57–0.63	0.53–0.59	B 0.81
0.64–0.69	0.60–0.64	B 0.92
0.70–0.77	0.65–0.71	B 1.03
0.78–0.86	0.72–0.80	B 1.16
0.87–0.97	0.81–0.90	B 1.30
0.98–1.12	0.91–1.03	B 1.45
1.13–1.24	1.04–1.14	B 1.67
1.25–1.39	1.15–1.27	B 1.88
1.40–1.57	1.28–1.44	B 2.10
1.58–1.78	1.45–1.63	B 2.40
1.79–1.96	1.64–1.79	B 2.65
1.97–2.20	1.80–2.01	B 3.00
2.21–2.41	2.02–2.19	B 3.30
2.42–2.75	2.20–2.52	B 3.70
2.76–3.25	2.53–2.95	B 4.15
3.26–3.50	2.96–3.17	B 4.85
3.51–3.87	3.18–3.50	B 5.50
3.88–4.13	3.51–3.73	B 6.25
4.14–4.69	3.74–4.22	B 6.90
4.70–5.20	4.23–4.68	B 7.70
5.21–5.53	4.69–4.98	B 8.20
5.54–6.23	4.99–5.59	B 9.10
6.24–7.18	5.60–6.43	B 10.2
7.19–8.20	6.44–7.41	B 11.5
8.21–8.98	7.42–8.02	B 12.8
8.99–9.63	8.03–8.59	B 14.0
9.64–10.6	8.60–9.52	B 15.5
10.7–11.8	9.53–10.5	B 17.5
11.9–12.7	10.6–11.2	B 19.5
12.8–14.3	11.3–12.0	B 22.0
14.4–16.1	—	B 25.0
16.2–18.0	—	B 28.0
Following Selections for Size M-1 & M-1P Only.		
—	11.3–12.7	B 22.0
—	12.8–14.3	B 25.0
16.2–18.3	14.4–16.1	B 28.0
18.4–20.2	16.2–17.8	B 32.0
20.3–23.0	17.9–20.1	B 36.0
23.1–26.0	20.2–22.6	B 40.0
—	22.7–25.5	B 45.0
—	25.6–26.0	B 50.0
Following Selections for Size M-1P Only		
25.9–29.0	—	B 45.0
29.1–30.8	—	B 50.0
30.9–32.7	—	B 56.0
32.8–36.0	—	B 62.0

Thermal Unit Table 4
(index and instructions: page 16-132 to page 16-136)

Motor FLC (A)		Thermal Unit Number
1 T.U.	3 T.U.	
0.32–0.33	0.29–0.30	B 0.44
0.34–0.38	0.31–0.35	B 0.51
0.39–0.41	0.36–0.37	B 0.57
0.42–0.50	0.38–0.45	B 0.63
0.51–0.61	0.46–0.54	B 0.71
0.62–0.68	0.55–0.61	B 0.81
0.69–0.74	0.62–0.66	B 0.92
0.75–0.83	0.67–0.74	B 1.03
0.84–0.93	0.75–0.83	B 1.16
0.94–1.05	0.84–0.93	B 1.30
1.06–1.21	0.94–1.07	B 1.45
1.22–1.34	1.08–1.19	B 1.67
1.35–1.50	1.20–1.33	B 1.88
1.51–1.70	1.34–1.51	B 2.10
1.71–1.93	1.52–1.70	B 2.40
1.94–2.12	1.71–1.87	B 2.65
2.13–2.38	1.88–2.10	B 3.00
2.39–2.61	2.11–2.29	B 3.30
2.62–2.99	2.30–2.63	B 3.70
3.00–3.53	2.64–3.09	B 4.15
3.54–3.80	3.10–3.32	B 4.85
3.81–4.21	3.33–3.67	B 5.50
4.22–4.49	3.68–3.91	B 6.25
4.50–5.10	3.92–4.43	B 6.90
5.11–5.66	4.44–4.91	B 7.70
5.67–6.03	4.92–5.23	B 8.20
6.04–6.79	5.24–5.88	B 9.10
6.80–7.84	5.89–6.77	B 10.2
7.85–8.96	6.78–7.90	B 11.5
8.97–9.82	7.91–8.44	B 12.8
9.83–10.4	8.45–9.05	B 14.0
10.5–11.6	9.06–9.99	B 15.5
11.7–12.9	10.0–11.0	B 17.5
13.0–13.9	11.1–11.9	B 19.5
14.0–15.7	12.0–12.0	B 22.0
15.8–18.0	—	B 25.0
Following Selections for Size M-1 & M-1P Only.		
—	12.0–13.4	B 22.0
—	13.5–15.1	B 25.0
17.8–20.1	15.2–17.0	B 28.0
20.2–22.2	17.1–18.9	B 32.0
22.3–25.3	19.0–21.4	B 36.0
25.4–26.0	21.5–24.0	B 40.0
—	24.1–26.0	B 45.0
Following Selections for Size M-1P Only.		
25.4–28.4	—	B 40.0
28.5–33.1	—	B 45.0
33.2–36.0	—	B 50.0

Thermal Unit Table 5
(index and instructions: page 16-132 to page 16-136)

Current Transformer Ratio										Thermal Unit Number
25/5	50/5	75/5	100/5	150/5	200/5	250/5	300/5	400/5	500/5	
Motor FLC										
10.6–11.7	21.1–23.6	31.7–35.4	42.3–47.2	63.4–70.9	84.5–94.6	106.–117.	127.–141.	169.–188.	211.–236.	B 3.00
11.8–13.2	23.7–26.5	35.5–39.8	47.3–53.1	71.0–79.7	94.7–105.	118.–132.	142.–159.	189.–212.	237.–265.	B 3.30
13.3–14.8	26.6–29.6	39.9–44.5	53.2–59.4	79.8–89.1	106.–118.	133.–148.	160.–177.	213.–237.	266.–296.	B 3.70
14.9–17.2	29.7–34.5	44.6–51.8	59.5–69.2	89.2–103.	119.–138.	149.–172.	178.–207.	238.–276.	297.–345.	B 4.15
17.3–19.6	34.6–39.2	51.9–58.9	69.3–78.6	104.–117.	139.–156.	173.–196.	208.–235.	277.–314.	346.–360.	B 4.85
19.7–22.3	39.3–44.6	59.0–67.0	78.7–89.3	118.–133.	157.–178.	197.–223.	236.–267.	315.–357.	—	B 5.50

Thermal Unit Table 9
(index and instructions: page 16-132 to page 16-136)

Motor FLC (A)	Thermal Unit Number
15.3–16.7	C 20.0
16.8–19.8	C 22.0
19.9–22.8	C 26.0
22.9–25.8	C 30.0
25.9–30.4	C 34.0
30.5–31.9	C 40.0
32.0–34.2	C 42.0
34.3–38.8	C 45.0
38.9–44.2	C 51.0
44.3–50.2	C 58.0
50.3–57.1	C 66.0
57.2–63.2	C 75.0
63.3–68.6	C 83.0
68.7–78.6	C 90.0
78.7–86.9	C 103.0
87.0–100.0	C 114.0

Thermal Unit Table 10
(index and instructions: page 16-132 to page 16-136)

Motor FLC (A)	Thermal Unit Number
43.6–47.3	CC 54.5
47.4–51.3	CC 59.4
51.4–54.6	CC 64.3
54.7–59.7	CC 68.5
59.8–65.1	CC 74.6
65.2–70.1	CC 81.5
70.2–75.1	CC 87.7
75.2–82.2	CC 94.0
82.3–89.2	CC 103.0
89.3–96.5	CC 112.0
96.6–104.	CC 121.0
105.–113.	CC 132.0
114.–123.	CC 143.0
124.–132.	CC 156.0
133.–150.	CC 167.0

© 2019 Schneider Electric
All Rights Reserved
11/20/2019

Courtesy of Steven Engineering, Inc - (800) 258-9200 - sales@steveneng.com - www.stevenengineering.com

Thermal Unit Table 12
(index and instructions: page 16-132 to page 16-136)

Motor FLC (A)	Thermal Unit Number
92.–100.	DD 112.0
101.–109.	DD 121.0
110.–119.	DD 128.0
120.–131.	DD 140.0
132.–139.	DD 150.0
140.–156.	DD 160.0
157.–166.	DD 185.0
167.–180.	DD 213.0
181.–189.	DD 220.0
190.–209.	DD 230.0
210.–225.	DD 250.0
226.–238.	DD 265.0
239.–263.	DD 280.0
264.–300.	DD 300.0

Thermal Unit Table 13
(index and instructions: page 16-132 to page 16-136)

Motor FLC (A)			Thermal Unit Number
1.T.U.	2 T.U.	3 T.U.	
0.29–0.31	0.29–0.31	0.28–0.30	B 0.44
0.32–0.34	0.32–0.34	0.31–0.34	B 0.51
0.35–0.38	0.35–0.38	0.35–0.37	B 0.57
0.39–0.45	0.39–0.45	0.38–0.44	B 0.63
0.46–0.54	0.46–0.54	0.45–0.53	B 0.71
0.55–0.61	0.55–0.61	0.54–0.59	B 0.81
0.62–0.66	0.62–0.66	0.60–0.64	B 0.92
0.67–0.73	0.67–0.73	0.65–0.72	B 1.03
0.74–0.81	0.74–0.81	0.73–0.80	B 1.16
0.82–0.94	0.82–0.94	0.81–0.90	B 1.30
0.95–1.05	0.95–1.05	0.91–1.03	B 1.45
1.06–1.22	1.06–1.22	1.04–1.14	B 1.67
1.23–1.34	1.23–1.34	1.15–1.27	B 1.88
1.35–1.51	1.35–1.51	1.28–1.43	B 2.10
1.52–1.71	1.52–1.71	1.44–1.62	B 2.40
1.72–1.93	1.72–1.93	1.63–1.77	B 2.65
1.94–2.14	1.94–2.14	1.78–1.97	B 3.00
2.15–2.40	2.15–2.40	1.98–2.32	B 3.30
2.41–2.72	2.41–2.72	2.33–2.51	B 3.70
2.73–3.15	2.73–3.15	2.52–2.99	B 4.15
3.16–3.55	3.16–3.55	3.00–3.42	B 4.85
3.56–4.00	3.56–4.00	3.43–3.75	B 5.50
4.01–4.40	4.01–4.40	3.76–3.98	B 6.25
4.41–4.88	4.41–4.88	3.99–4.48	B 6.90
4.89–5.19	4.89–5.19	4.49–4.93	B 7.70
5.20–5.73	5.20–5.73	4.94–5.21	B 8.20
5.74–6.39	5.74–6.39	5.22–5.84	B 9.10
6.40–7.13	6.40–7.13	5.85–6.67	B 10.2
7.14–7.90	7.14–7.90	6.68–7.54	B 11.5
7.91–8.55	7.91–8.55	7.55–8.14	B 12.8
8.56–9.53	8.56–9.53	8.15–8.72	B 14.0
9.54–10.6	9.54–10.6	8.73–9.66	B 15.5
10.7–11.8	10.7–11.8	9.67–10.5	B 17.5
11.9–13.2	11.9–12.0	10.6–11.3	B 19.5
13.3–14.9	—	11.4–12.0	B 22.0
15.0–16.6	—	—	B 25.0
16.7–18.0	—	—	B 28.0
Following Selections for Size 1 Only			
—	11.9–13.2	—	B 19.5
—	13.3–14.9	11.4–12.7	B 22.0
—	15.0–16.6	12.8–14.1	B 25.0
16.7–18.9	16.7–18.9	14.2–15.9	B 28.0
19.0–21.2	19.0–21.2	16.0–17.5	B 32.0
21.3–23.0	21.3–23.0	17.6–19.7	B 36.0
23.1–25.5	23.1–25.5	19.8–21.9	B 40.0
25.6–26.0	25.6–26.0	22.0–24.4	B 45.0
—	—	24.5–26.0	B 50.0

Thermal Unit Table 14
(index and instructions: page 16-132 to page 16-136)

Motor FLC (A)			Thermal Unit Number
1.T.U.	2 T.U.	3 T.U.	
0.43–0.47	0.41–0.45	0.40–0.41	A .49
0.48–0.51	0.46–0.50	0.42–0.46	A .54
0.52–0.56	0.51–0.55	0.47–0.51	A .59
0.57–0.64	0.56–0.62	0.52–0.57	A .65
0.65–0.69	0.63–0.67	0.58–0.62	A .71
0.70–0.76	0.68–0.72	0.63–0.67	A .78
0.77–0.84	0.73–0.81	0.68–0.75	A .86
0.85–0.91	0.82–0.88	0.76–0.80	A .95
0.92–1.01	0.89–0.97	0.81–0.89	A 1.02
1.02–1.15	0.98–1.08	0.90–1.02	A 1.16
1.16–1.23	1.09–1.18	1.03–1.09	A 1.25
1.24–1.37	1.19–1.32	1.10–1.21	A 1.39
1.38–1.45	1.33–1.40	1.22–1.29	A 1.54
1.46–1.56	1.41–1.48	1.30–1.37	A 1.63
1.57–1.67	1.49–1.60	1.38–1.48	A 1.75
1.68–1.77	1.61–1.72	1.49–1.58	A 1.86
1.78–1.92	1.73–1.84	1.59–1.72	A 1.99
1.93–2.09	1.85–2.00	1.73–1.85	A 2.15
2.10–2.31	2.01–2.22	1.86–2.05	A 2.31
2.32–2.56	2.23–2.45	2.06–2.29	A 2.57
2.57–2.92	2.46–2.82	2.30–2.62	A 2.81
2.93–3.16	2.83–3.08	2.63–2.84	A 3.61
3.17–3.48	3.09–3.39	2.85–3.10	A 3.95
3.49–3.83	3.40–3.75	3.11–3.46	A 4.32
3.84–4.24	3.76–4.16	3.47–3.85	A 4.79
4.25–4.62	4.17–4.51	3.86–4.16	A 5.30
4.63–4.92	4.52–4.83	4.17–4.46	A 5.78
4.93–5.61	4.84–5.49	4.47–5.08	A 6.20
5.62–5.85	5.50–5.67	5.09–5.35	A 6.99
5.86–6.36	5.68–6.16	5.36–5.82	A 7.65
6.37–6.99	6.17–6.75	5.83–6.34	A 8.38
7.00–7.67	6.76–7.00	6.35–6.95	A 9.25
7.68–8.15	—	6.96–7.00	A 9.85
8.16–9.00	—	—	A 11.0

Thermal Unit Table 15
(index and instructions: page 16-132 to page 16-136)

Motor FLC (A)			Thermal Unit Number
1.T.U.	2 T.U.	3 T.U.	
0.31–0.33	0.31–0.33	0.29–0.31	B 0.44
0.34–0.36	0.34–0.36	0.32–0.36	B 0.51
0.37–0.40	0.37–0.40	0.37–0.38	B 0.57
0.41–0.48	0.41–0.48	0.39–0.46	B 0.63
0.49–0.57	0.49–0.57	0.47–0.55	B 0.71
0.58–0.64	0.58–0.64	0.56–0.61	B 0.81
0.65–0.70	0.65–0.70	0.62–0.66	B 0.92
0.71–0.77	0.71–0.77	0.67–0.75	B 1.03
0.78–0.85	0.78–0.85	0.76–0.83	B 1.16
0.86–0.99	0.86–0.99	0.84–0.93	B 1.30
1.00–1.10	1.00–1.10	0.94–1.06	B 1.45
1.11–1.28	1.11–1.28	1.07–1.18	B 1.67
1.29–1.41	1.29–1.41	1.19–1.31	B 1.88
1.42–1.58	1.42–1.58	1.32–1.47	B 2.10
1.59–1.80	1.59–1.80	1.48–1.67	B 2.40
1.81–2.03	1.81–2.03	1.68–1.83	B 2.65
2.04–2.25	2.04–2.25	1.84–2.04	B 3.00
2.26–2.51	2.26–2.51	2.05–2.38	B 3.30
2.52–2.83	2.52–2.83	2.39–2.60	B 3.70
2.84–3.29	2.84–3.29	2.61–3.13	B 4.15
3.30–3.75	3.30–3.75	3.14–3.59	B 4.85
3.76–4.22	3.76–4.22	3.60–3.94	B 5.50
4.23–4.65	4.23–4.65	3.95–4.19	B 6.25
4.66–5.16	4.66–5.16	4.20–4.72	B 6.90
5.17–5.53	5.17–5.53	4.73–5.21	B 7.70
5.54–6.09	5.54–6.09	5.22–5.51	B 8.20
6.10–6.80	6.10–6.80	5.52–6.17	B 9.10
6.81–7.60	6.81–7.60	6.18–7.07	B 10.2
7.61–8.35	7.61–8.35	7.08–8.05	B 11.5
8.36–9.04	8.36–9.04	8.06–8.69	B 12.8
9.05–9.99	9.05–9.99	8.70–9.32	B 14.0
10.0–11.1	10.0–11.1	9.33–10.2	B 15.5
11.2–12.3	11.2–12.0	10.3–11.3	B 17.5
12.4–13.7	—	11.4–12.0	B 19.5
13.8–15.4	—	—	B 22.0
15.5–18.0	—	—	B 25.0
Following Selections for Size 1 Only			
—	11.2–12.3	—	B 17.5
—	12.4–13.7	11.4–12.1	B 19.5
—	13.8–15.4	12.2–13.7	B 22.0
15.5–17.2	15.5–17.2	13.8–15.2	B 25.0
17.3–19.4	17.3–19.4	15.3–17.2	B 28.0
19.5–21.7	19.5–21.7	17.3–18.9	B 32.0
21.8–23.9	21.8–23.9	19.0–21.4	B 36.0
24.0–26.0	24.0–26.0	21.5–23.7	B 40.0
—	—	23.8–26.0	B 45.0

© 2019 Schneider Electric
All Rights Reserved
11/20/2019

Courtesy of Steven Engineering, Inc - (800) 258-9200 - sales@steveneng.com - www.stevenengineering.com

Thermal Unit Table 16
(index and instructions: page 16-132 to page 16-136)

Motor FLC (A)			Thermal Unit Number
1.T.U.	2 T.U.	3 T.U.	
16.2–17.5	15.1–16.2	14.3–15.4	CC 20.9
17.6–18.8	16.3–17.3	15.5–16.4	CC 22.8
18.9–20.5	17.4–19.5	16.5–18.5	CC 24.6
20.6–22.2	19.6–20.7	18.6–19.6	CC 26.3
22.3–23.7	20.8–22.3	19.7–21.1	CC 28.8
23.8–25.4	22.4–24.0	21.2–22.7	CC 31.0
25.5–27.3	24.1–25.7	22.8–24.4	CC 33.3
27.4–29.3	25.8–27.5	24.5–26.1	CC 36.4
29.4–31.5	27.6–29.6	26.2–28.1	CC 39.6
31.6–33.9	29.7–31.7	28.2–30.0	CC 42.7
34.0–36.2	31.8–33.9	30.1–32.1	CC 46.6
36.3–39.3	34.0–36.6	32.2–34.7	CC 50.1
39.4–42.3	36.7–39.3	34.8–37.3	CC 54.5
42.4–45.3	39.4–42.3	37.4–40.1	CC 59.4
45.4–48.3	42.4–44.9	40.2–42.6	CC 64.3
48.4–52.0	45.0–48.3	42.7–45.8	CC 68.5
52.1–54.9	48.4–50.9	45.9–48.3	CC 74.6
55.0–59.7	51.0–55.5	48.4–52.6	CC 81.5
59.8–65.4	55.6–59.9	52.7–56.8	CC 87.7
65.5–69.6	60.0–64.2	56.9–60.9	CC 94.0
69.7–74.8	64.3–68.7	61.0–65.1	CC 103.0
74.9–79.7	68.8–71.4	65.2–67.7	CC 112.0
79.8–83.1	71.5–74.8	67.8–70.9	CC 121.0
83.2–86.0	74.9–78.0	71.0–73.9	CC 132.0
—	78.1–80.7	74.0–76.5	CC 143.0
—	80.8–86.0	76.6–80.2	CC 156.0
—	—	80.3–83.1	CC 167.0
—	—	83.2–86.0	CC 180.0

Thermal Unit Table 17
(index and instructions: page 16-132 to page 16-136)

Motor FLC (A)			Thermal Unit Number
1.T.U.	2 T.U.	3 T.U.	
0.42–0.46	0.39–0.43	0.38–0.40	A .49
0.47–0.50	0.44–0.47	0.41–0.44	A .54
0.51–0.55	0.48–0.52	0.45–0.49	A .59
0.56–0.62	0.53–0.58	0.50–0.55	A .65
0.63–0.67	0.59–0.64	0.56–0.60	A .71
0.68–0.73	0.65–0.68	0.61–0.65	A .78
0.74–0.81	0.69–0.77	0.66–0.72	A .86
0.82–0.89	0.78–0.84	0.73–0.79	A .95
0.90–0.98	0.85–0.93	0.80–0.88	A 1.02
0.99–1.12	0.94–1.05	0.89–0.98	A 1.16
1.13–1.20	1.06–1.13	0.99–1.07	A 1.25
1.21–1.34	1.14–1.25	1.08–1.17	A 1.39
1.35–1.41	1.26–1.33	1.18–1.25	A 1.54
1.42–1.51	1.34–1.42	1.26–1.33	A 1.63
1.52–1.62	1.43–1.52	1.34–1.44	A 1.75
1.63–1.73	1.53–1.63	1.45–1.53	A 1.86
1.74–1.86	1.64–1.75	1.54–1.65	A 1.99
1.87–2.02	1.76–1.90	1.66–1.79	A 2.15
2.03–2.25	1.91–2.13	1.80–1.99	A 2.31
2.26–2.46	2.14–2.33	2.00–2.18	A 2.57
2.47–2.77	2.34–2.73	2.19–2.45	A 2.81
2.78–2.99	2.74–2.86	2.46–2.65	A 3.61
3.00–3.26	2.87–3.14	2.66–2.90	A 3.95
3.27–3.59	3.15–3.47	2.91–3.19	A 4.32
3.60–3.99	3.48–3.83	3.20–3.56	A 4.79
4.00–4.42	3.84–4.16	3.57–3.83	A 5.30
4.43–4.61	4.17–4.43	3.84–4.08	A 5.78
4.62–5.23	4.44–5.00	4.09–4.64	A 6.20
5.24–5.39	5.01–5.16	4.65–5.00	A 6.99
5.40–5.88	5.17–5.56	5.01–5.36	A 7.65
5.89–6.56	5.57–6.22	5.37–5.87	A 8.38
6.57–7.18	6.23–6.89	5.88–6.43	A 9.25
7.19–7.80	6.90–7.00	6.44–6.79	A 9.85
7.81–9.00	—	6.80–7.00	A 11.0

Thermal Unit Table 18
(index and instructions: page 16-132 to page 16-136)

Motor FLC (A)			Thermal Unit Number
1.T.U.	2 T.U.	3 T.U.	
15.5–16.4	14.4–15.3	13.6–14.5	CC 20.9
16.5–17.6	15.4–16.4	14.6–15.5	CC 22.8
17.7–19.1	16.5–18.4	15.6–17.4	CC 24.6
19.2–20.4	18.5–19.6	17.5–18.5	CC 26.3
20.5–22.1	19.7–21.0	18.6–19.9	CC 28.8
22.2–23.4	21.1–22.7	20.0–21.5	CC 31.0
23.5–25.6	22.8–24.2	21.6–22.9	CC 33.3
25.7–27.3	24.3–25.9	23.0–24.5	CC 36.4
27.4–29.4	26.0–27.8	24.6–26.3	CC 39.6
29.5–31.5	27.9–29.8	26.4–28.2	CC 42.7
31.6–33.7	29.9–31.7	28.3–30.0	CC 46.6
33.8–36.5	31.8–34.2	30.1–32.3	CC 50.1
36.6–39.1	34.3–36.9	32.4–34.9	CC 54.5
39.2–41.7	37.0–39.8	35.0–37.6	CC 59.4
41.8–44.8	39.9–42.3	37.7–40.0	CC 64.3
44.9–48.0	42.4–45.3	40.1–42.8	CC 68.5
48.1–50.7	45.4–47.9	42.9–45.3	CC 74.6
50.8–54.9	48.0–51.9	45.4–49.1	CC 81.5
55.0–59.9	52.0–56.5	49.2–53.4	CC 87.7
60.0–63.3	56.6–60.7	53.5–57.4	CC 94.0
63.4–67.2	60.8–64.8	57.5–61.3	CC 103.0
67.3–72.4	64.9–67.1	61.4–63.5	CC 112.0
72.5–74.9	67.2–70.1	63.6–66.3	CC 121.0
75.0–77.4	70.2–72.9	66.4–69.0	CC 132.0
77.5–80.7	73.0–74.9	69.1–70.9	CC 143.0
80.8–83.1	75.0–77.9	71.0–73.7	CC 156.0
83.2–86.0	78.0–80.9	73.8–76.5	CC 167.0
—	81.0–82.9	76.6–78.4	CC 180.0
—	83.0–86.0	78.5–86.0	CC 196.0

Thermal Unit Table 19
(index and instructions: page 16-132 to page 16-136)

Motor FLC (A)	Thermal Unit Number
43.6–47.3	CC 54.5
47.4–51.3	CC 59.4
51.4–54.6	CC 64.3
54.7–59.7	CC 68.5
59.8–65.1	CC 74.6
65.2–70.1	CC 81.5
70.2–75.1	CC 87.7
75.2–82.2	CC 94.0
82.3–89.2	CC 103.0
89.3–96.5	CC 112.0
96.6–104.	CC 121.0
105.–113.	CC 132.0
114.–123.	CC 143.0
124.–133.	CC 156.0

Thermal Unit Table 20
(index and instructions: page 16-132 to page 16-136)

Motor FLC (A)	Thermal Unit Number
133.–148.	B 1.30
149.–174.	B 1.45
175.–195.	B 1.67
196.–219.	B 1.88
220.–239.	B 2.10
240.–271.	B 2.40
272.–308.	B 2.65
309.–348.	B 3.00
349.–397.	B 3.30
398.–429.	B 3.70
430.–495.	B 4.15
496.–520.	B 4.85

Thermal Unit Table 21
(index and instructions: page 16-132 to page 16-136)

Motor FLC (A)	Thermal Unit Load
128.–140.	B 1.30
141.–163.	B 1.45
164.–179.	B 1.67
180.–201.	B 1.88
202.–227.	B 2.10
228.–251.	B 2.40
252.–278.	B 2.65
279.–308.	B 3.00
309.–346.	B 3.30
347.–380.	B 3.70
381.–426.	B 4.15
427.–454.	B 4.85
455.–489.	B 5.50
490.–520.	B 6.25

© 2019 Schneider Electric
All Rights Reserved
11/20/2019

Courtesy of Steven Engineering, Inc - (800) 258-9200 - sales@steveneng.com - www.stevenengineering.com

Thermal Unit Table 22
(index and instructions: page 16-132 to page 16-136)

Motor FLC (A)	Thermal Unit Number
92.0–100. 101.–109. 110.–119. 120.–131. 132.–139.	DD 112.0 DD 121.0 DD 128.0 DD 140.0 DD 150.0
140.–156. 157.–166. 167.–180. 181.–189. 190.–209.	DD 160.0 DD 185.0 DD 213.0 DD 220.0 DD 230.0
210.–225. 226.–238. 239.–266.	DD 250.0 DD 265.0 DD 280.0

Thermal Unit Table 24
(index and instructions: page 16-132 to page 16-136)

Motor FLC (A)	Thermal Unit Number
88.2–95.1 95.2–101. 102.–111. 112.–119. 120.–131.	DD 112.0 DD 121.0 DD 128.0 DD 140.0 DD 150.0
132.–149. 150.–170. 171.–180. 181.–197. 198.–204.	DD 160.0 DD 185.0 DD 220.0 DD 240.0 DD 250.0
205.–213. 214.–237. 238.–243. 244.–266.	DD 265.0 DD 280.0 DD 300.0 DD 320.0

Thermal Unit Table 26
(index and instructions: page 16-132 to page 16-136)

Size 7 Type J	Size 8 Type K	Thermal Unit Number
Current Transformer Ratio		
120/5	2000/5	
Motor FLC		
166.–187. 188.–211. 212.–232. 233.–267. 268.–301.	277.–312. 313.–352. 353.–388. 389.–445. 446.–503.	B 1.03 B 1.16 B 1.30 B 1.45 B 1.67
302.–336. 337.–383. 384.–425. 426.–466. 467.–522.	504.–561. 562.–640. 641.–708. 709.–777. 778.–870.	B 1.88 B 2.10 B 2.40 B 2.65 B 3.00
523.–587. 588.–656. 657.–764.	871.–978. 979.–1093. 1094.–1215.	B 3.30 B 3.70 B 4.15

Thermal Unit Table 28
(index and instructions: page 16-132 to page 16-136)

Motor FLC (A)		Thermal Unit Number
2 or 3 T.U.		
Large Enclosure	Small Enclosure	
45.3–48.2 48.3–52.4 52.5–56.4 56.5–61.2 61.3–66.1	40.3–42.8 42.9–46.2 46.3–49.8 49.9–54.9 55.0–57.9	CC 64.3 CC 68.5 CC 74.6 CC 81.5 CC 87.7
66.2–71.4 71.5–77.0 77.1–80.7 80.8–87.7 87.8–94.9	58.0–62.5 62.6–67.3 67.4–73.4 73.5–78.9 79.0–84.9	CC 94.0 CC 103.0 CC 112.0 CC 121.0 CC 132.0
95.0–102. 103.–110. 111.–117. 118.–133. —	85.0–91.0 91.1–97.2 97.3–104. 105.–121. 122.–133.	CC 143.0 CC 156.0 CC 167.0 CC 180.0 CC 196.0

Thermal Unit Table 31
(index and instructions: page 16-132 to page 16-136)

Motor FLC (A)	Thermal Unit Number
0.31–0.35 0.36–0.39 0.40–0.44	B 0.44 B 0.51 B 0.57
0.45–0.50 0.51–0.61 0.62–0.68	B 0.63 B 0.71 B 0.81
0.69–0.73 0.74–0.82 0.83–0.92	B 0.92 B 1.03 B 1.16
0.93–1.03 1.04–1.19 1.20–1.34	B 1.30 B 1.45 B 1.67
1.35–1.50 1.51–1.74 1.75–1.97	B 1.88 B 2.10 B 2.40
1.98–2.14 2.15–2.47 2.48–2.91	B 2.65 B 3.00 B 3.30
2.92–3.31 3.32–3.75 3.76–4.05	B 3.70 B 4.15 B 4.85
4.06–4.94 4.95–5.52 5.53–6.11	B 6.25 B 6.90 B 7.70
6.12–6.52 6.53–7.31 7.32–8.43	B 8.20 B 9.10 B 10.2
8.44–9.83 9.84–10.7 10.8–11.6	B 11.5 B 12.8 B 14.0
11.7–12.9 13.0–14.3 14.4–15.7	B 15.5 B 17.5 B 19.5
15.8–17.8 17.9–20.3 20.4–23.3	B 22.0 B 25.0 B 28.0
23.4–26.6 26.7–30.3 30.4–35.3	B 32.0 B 36.0 B 40.0
35.4–41.5 41.6–45	B 45.0 B 50.0

Thermal Unit Table 34
(index and instructions: page 16-132 to page 16-136)

Motor FLC (A)	Thermal Unit Number
15.1–16.2 16.3–17.5 17.6–19.1 19.2–20.7 20.8–22.2	CC 20.9 CC 22.8 CC 24.6 CC 26.3 CC 28.8
22.3–24.0 24.1–25.7 25.8–27.8 27.9–30.1 30.2–32.5	CC 31.0 CC 33.3 CC 36.4 CC 39.6 CC 42.7
32.6–35.1 35.2–38.0 38.1–41.1 41.2–44.0 44.1–47.2	CC 46.6 CC 50.1 CC 54.5 CC 59.4 CC 64.3
47.3–51.1 51.2–55.8 55.9–59.5 59.6–64.5 64.6–69.5	CC 68.5 CC 74.6 CC 81.5 CC 87.7 CC 94.0
69.6–75.0 75.1–78.1 78.2–82.3 82.4–86.0	CC 103.0 CC 112.0 CC 121.0 CC 132.0

Thermal Unit Table 40
(index and instructions: page 16-132 to page 16-136)

Motor FLC (A)	Thermal Unit Number
15.3–16.7 16.8–19.8 19.9–22.8 22.9–25.8 25.9–30.4	C 20.0 C 22.0 C 26.0 C 30.0 C 34.0
30.5–31.9 32.0–34.2 34.3–38.8 38.9–44.2 44.3–50.2	C 40.0 C 42.0 C 45.0 C 51.0 C 58.0
50.3–57.1 57.2–63.2 63.3–68.6 68.7–78.6 78.7–86.0	C 66.0 C 75.0 C 83.0 C 90.0 C 103.0

© 2019 Schneider Electric
All Rights Reserved
11/20/2019

Courtesy of Steven Engineering, Inc - (800) 258-9200 - sales@steveneng.com - www.stevenengineering.com

Thermal Unit Table 41
(index and instructions: page 16-132 to page 16-136)

Motor FLC (A)	Thermal Unit Number
0.81–0.92	B 1.16
0.93–1.07	B 1.30
1.08–1.14	B 1.45
1.15–1.26	B 1.67
1.27–1.49	B 1.88
1.50–1.73	B 2.10
1.74–1.89	B 2.40
1.90–2.16	B 2.65
2.17–2.37	B 3.00
2.38–2.66	B 3.30
2.67–2.99	B 3.70
3.00–3.40	B 4.15
3.41–3.94	B 4.85
3.95–4.15	B 5.50
4.16–4.49	B 6.25
4.50–5.15	B 6.90
5.16–5.77	B 7.70
5.78–6.61	B 8.20
6.62–7.14	B 9.10
7.15–7.97	B 10.2
7.98–8.15	B 11.5
8.16–9.32	B 12.8
9.33–9.97	B 14.0
9.98–10.7	B 15.5
10.8–12.0	B 17.5
12.1–13.9	B 19.5
14.0–15.7	B 22.0
15.8–18.4	B 25.0
18.5–21.6	B 28.0
21.7–24.0	B 32.0
24.1–28.6	B 36.0
28.7–30.7	B 40.0
30.8–33.5	B 45.0
33.6–36.0	B 50.0

Thermal Unit Table 43
(index and instructions: page 16-132 to page 16-136)

Motor FLC (A)	Thermal Unit Number
0.41–0.44	A .49
0.45–0.49	A .54
0.50–0.53	A .59
0.54–0.58	A .65
0.59–0.65	A .71
0.66–0.71	A .78
0.72–0.78	A .86
0.79–0.85	A .95
0.86–0.96	A 1.02
0.97–1.04	A 1.16
1.05–1.16	A 1.25
1.17–1.29	A 1.39
1.30–1.37	A 1.54
1.38–1.47	A 1.63
1.48–1.56	A 1.75
1.57–1.65	A 1.86
1.66–1.79	A 1.99
1.80–1.95	A 2.15
1.96–2.15	A 2.31
2.16–2.38	A 2.57
2.39–2.75	A 2.81
2.76–2.84	A 3.61
2.85–3.06	A 3.95
3.07–3.45	A 4.32
3.46–3.70	A 4.79
3.71–4.07	A 5.30
4.08–4.32	A 5.78
4.33–4.90	A 6.20
4.91–5.35	A 6.99
5.36–5.85	A 7.65
5.86–6.41	A 8.38
6.42–6.79	A 9.25
6.80–7.57	A 9.85
7.58–8.15	A 11.0
8.16–8.98	A 11.9
8.99–9.67	A 13.2
9.68–9.95	A 14.1
9.96–10.8	A 14.8
10.9–12.1	A 16.2
12.2–13.1	A 17.9
13.2–13.9	A 19.8
14.0–15.0	A 21.3
15.1–16.0	A 25.2

Thermal Unit Table 44
(index and instructions: page 16-132 to page 16-136)

Motor FLC (A)	Thermal Unit Number
0.34–0.38	B 0.44
0.39–0.43	B 0.51
0.44–0.48	B 0.57
0.49–0.53	B 0.65
0.54–0.62	B 0.71
0.63–0.69	B 0.81
0.70–0.78	B 0.92
0.79–0.88	B 1.03
0.89–0.99	B 1.16
1.00–1.10	B 1.30
1.11–1.26	B 1.45
1.27–1.43	B 1.67
1.44–1.59	B 1.88
1.60–1.81	B 2.10
1.82–2.00	B 2.40
2.01–2.28	B 2.65
2.29–2.52	B 3.00
2.53–2.87	B 3.30
2.88–3.28	B 3.70
3.29–3.75	B 4.15
3.76–4.27	B 4.85
4.28–4.77	B 5.50
4.78–5.27	B 6.25
5.28–5.91	B 6.90
5.92–6.25	B 7.70
6.26–6.83	B 8.20
6.84–7.65	B 9.10
7.66–8.55	B 10.2
8.56–9.56	B 11.5
9.57–10.3	B 12.8
10.4–11.3	B 14.0
11.4–12.4	B 15.5
12.5–14.1	B 17.5
14.2–15.7	B 19.5
15.8–17.9	B 22.0
18.0–20.1	B 25.0
20.2–22.5	B 28.0
22.6–25.0	B 32.0

Thermal Unit Table 49
(index and instructions: page 16-132 to page 16-136)

Motor FLC (A)	Thermal Unit Number
82.5–88.2	DD 112.0
88.3–95.9	DD 121.0
96.0–102.	DD 128.0
103.–109.	DD 140.0
110.–121.	DD 150.0
122.–139.	DD 160.0
140.–154.	DD 185.0
155.–163.	DD 220.0
164.–175.	DD 240.0
176.–184.	DD 250.0
185.–195.	DD 265.0
196.–215.	DD 280.0
216.–224.	DD 300.0
225.–243.	DD 320.0
244.–266.	DD 340.0

© 2019 Schneider Electric
All Rights Reserved
11/20/2019

Courtesy of Steven Engineering, Inc - (800) 258-9200 - sales@steveneng.com - www.stevenengineering.com

Thermal Unit Table 53
(index and instructions: page 16-132 to page 16-136)

Motor FLC (A)		Thermal Unit Number
1 T. U.	3 T. U.	
0.31–0.33	0.29–0.31	B 0.44
0.34–0.36	0.32–0.36	B 0.51
0.37–0.40	0.37–0.38	B 0.57
0.41–0.48	0.39–0.46	B 0.63
0.49–0.57	0.47–0.55	B 0.71
0.58–0.64	0.56–0.61	B 0.81
0.65–0.70	0.62–0.66	B 0.92
0.71–0.77	0.67–0.75	B 1.03
0.78–0.85	0.76–0.83	B 1.16
0.86–0.99	0.84–0.93	B 1.30
1.00–1.10	0.94–1.06	B 1.45
1.11–1.28	1.07–1.18	B 1.67
1.29–1.41	1.19–1.31	B 1.88
1.42–1.58	1.32–1.47	B 2.10
1.59–1.80	1.48–1.67	B 2.40
1.81–2.03	1.68–1.83	B 2.65
2.04–2.25	1.84–2.04	B 3.00
2.26–2.51	2.05–2.38	B 3.30
2.52–2.83	2.39–2.60	B 3.70
2.84–3.29	2.61–3.13	B 4.15
3.30–3.75	3.14–3.59	B 4.85
3.76–4.22	3.60–3.94	B 5.50
4.23–4.65	3.95–4.19	B 6.25
4.66–5.16	4.20–4.72	B 6.90
5.17–5.53	4.73–5.21	B 7.70
5.54–6.09	5.22–5.51	B 8.20
6.10–6.80	5.52–6.17	B 9.10
6.81–7.60	6.18–7.00	B 10.2
7.61–8.35	—	B 11.5
8.36–9.00	—	B 12.8

Thermal Unit Table 54
(index and instructions: page 16-132 to page 16-136)

Motor FLC (A)		Thermal Unit Number
2 T. U.	3 T. U.	
43.6–45.5	41.1–43.5	CC 64.3
45.6–49.6	43.6–46.8	CC 68.5
49.7–53.1	46.9–50.0	CC 74.6
53.2–57.6	50.1–54.9	CC 81.5
57.7–62.4	55.0–57.5	CC 87.7
62.5–67.5	57.6–61.8	CC 94.0
67.6–71.1	61.9–66.2	CC 103.0
71.2–75.9	66.3–72.4	CC 112.0
76.0–81.9	72.5–78.1	CC 121.0
82.0–84.6	78.2–80.7	CC 132.0
84.7–90.7	80.8–86.5	CC 143.0
90.8–98.4	86.6–93.9	CC 156.0
98.5–105.	94.0–100.	CC 167.0
106.–117.	101.–112.	CC 180.0
118.–123.	113.–117.	CC 196.0
124.–133.	118.–123.	CC 208.0
—	124.–133.	CC 219.0

Thermal Unit Table 56
(index and instructions: page 16-132 to page 16-136)

Motor FLC (A)		Thermal Unit Number
1 or 2 T. U.	3 T. U.	
3.29–3.74	3.18–3.40	B 4.85
3.75–4.23	3.41–3.76	B 5.50
4.24–4.68	3.77–4.00	B 6.25
4.69–5.22	4.01–4.57	B 6.90
5.23–5.67	4.58–5.03	B 7.70
5.68–6.13	5.04–5.32	B 8.20
6.14–6.91	5.33–5.97	B 9.10
6.92–7.70	5.98–6.88	B 10.2
7.71–8.56	6.89–7.82	B 11.5
8.57–9.39	7.83–8.47	B 12.8
9.40–10.4	8.48–9.15	B 14.0
10.5–11.6	9.16–10.1	B 15.5
11.7–12.9	10.2–11.2	B 17.5
13.0–14.6	11.3–12.0	B 19.5
14.7–16.5	12.1–13.6	B 22.0
16.6–18.5	13.7–15.2	B 25.0
18.6–21.0	15.3–17.1	B 28.0
21.1–23.6	17.2–19.0	B 32.0
23.7–26.3	19.1–21.5	B 36.0
26.4–29.3	21.6–24.1	B 40.0
29.4–35.1	24.2–27.0	B 45.0
35.2–36.1	27.1–28.7	B 50.0
36.2–39.1	28.8–30.4	B 56.0
39.2–41.5	30.5–32.2	B 62.0
41.6–45.0	32.3–35.4	B 70.0
—	35.5–38.2	B 79.0
—	38.3–45.0	B 88.0

Thermal Unit Table 58
(index and instructions: page 16-132 to page 16-136)

Motor FLC (A)		Thermal Unit Number
1 or 2 T. U.	3 T. U.	
3.37–3.82	3.28–3.51	B 4.85
3.83–4.33	3.52–3.89	B 5.50
4.34–4.79	3.90–4.14	B 6.25
4.80–5.33	4.15–4.73	B 6.90
5.34–5.79	4.74–5.22	B 7.70
5.80–6.27	5.23–5.53	B 8.20
6.28–7.03	5.54–6.21	B 9.10
7.04–7.88	6.22–7.17	B 10.2
7.89–8.73	7.18–8.19	B 11.5
8.74–9.55	8.20–8.90	B 12.8
9.56–10.6	8.91–9.57	B 14.0
10.7–11.8	9.58–10.6	B 15.5
11.9–13.1	10.7–11.8	B 17.5
13.2–14.9	11.9–12.7	B 19.5
15.0–16.9	12.8–14.4	B 22.0
17.0–18.8	14.5–16.1	B 25.0
18.9–21.5	16.2–18.2	B 28.0
21.6–24.1	18.3–20.2	B 32.0
24.2–26.8	20.3–22.8	B 36.0
26.9–29.9	22.9–25.6	B 40.0
30.0–35.5	25.7–28.8	B 45.0
35.6–36.5	28.9–30.6	B 50.0
36.6–39.6	30.7–32.4	B 56.0
39.7–41.5	32.5–34.6	B 62.0
41.6–45.0	34.7–38.6	B 70.0
—	38.7–45.0	B 79.0

© 2019 Schneider Electric
All Rights Reserved
11/20/2019

Courtesy of Steven Engineering, Inc - (800) 258-9200 - sales@steveneng.com - www.stevenengineering.com

Thermal Unit Table 59
(index and instructions: page 16-132 to page 16-136)

Motor FLC (A)		Thermal Unit Number
1 or 2 T. U.	3 T. U.	
0.34–0.38	0.29–0.31	B 0.44
0.39–0.43	0.32–0.35	B 0.51
0.44–0.47	0.36–0.38	B 0.57
0.48–0.53	0.39–0.46	B 0.63
0.54–0.60	0.47–0.55	B 0.71
0.61–0.68	0.56–0.62	B 0.81
0.69–0.76	0.63–0.67	B 0.92
0.77–0.86	0.68–0.75	B 1.03
0.87–0.97	0.76–0.84	B 1.16
0.98–1.07	0.85–0.95	B 1.30
1.08–1.23	0.96–1.09	B 1.45
1.24–1.39	1.10–1.21	B 1.67
1.40–1.55	1.22–1.35	B 1.88
1.56–1.77	1.36–1.53	B 2.10
1.78–1.96	1.54–1.73	B 2.40
1.97–2.15	1.74–1.90	B 2.65
2.16–2.41	1.91–2.14	B 3.00
2.42–2.71	2.15–2.34	B 3.30
2.72–3.03	2.35–2.67	B 3.70
3.04–3.53	2.68–3.22	B 4.15
3.54–4.01	3.23–3.48	B 4.85
4.02–4.56	3.49–3.87	B 5.50
4.57–5.03	3.88–4.14	B 6.25
5.04–5.59	4.15–4.73	B 6.90
5.60–5.95	4.74–5.28	B 7.70
5.96–6.58	5.29–5.64	B 8.20
6.59–7.31	5.65–6.39	B 9.10
7.32–8.15	6.40–7.43	B 10.2
8.16–9.13	7.44–8.55	B 11.5
9.14–9.91	8.56–9.40	B 12.8
9.92–10.7	9.41–10.0	B 14.0
10.8–12.1	10.1–11.2	B 15.5
12.2–13.5	11.3–12.5	B 17.5
13.6–15.1	12.6–13.5	B 19.5
15.2–17.0	13.6–15.4	B 22.0
17.1–18.9	15.5–17.5	B 25.0
19.0–21.5	17.6–19.9	B 28.0
21.6–24.0	20.0–22.2	B 32.0
24.1–26.0	22.3–25.5	B 36.0
—	25.6–26.0	B 40.0

Thermal Unit Table 61
(index and instructions: page 16-132 to page 16-136)

Motor FLC (A)		Thermal Unit Number
2 T. U.	3 T. U.	
46.8–50.0	45.3–48.2	CC 64.3
50.1–54.2	48.3–52.4	CC 68.5
54.3–58.3	52.5–56.4	CC 74.6
58.4–63.6	56.5–61.2	CC 81.5
63.7–68.5	61.3–66.1	CC 87.7
68.6–74.0	66.2–71.4	CC 94.0
74.1–79.8	71.5–77.0	CC 103.0
79.9–83.0	77.1–79.0	CC 112.0
83.1–88.9	79.1–84.7	CC 121.0
89.0–95.6	84.8–91.1	CC 132.0
95.7–102.	91.2–98.1	CC 143.0
103.–109.	98.2–104.	CC 156.0
110.–119.	105.–113.	CC 167.0
120.–133.	114.–123.	CC 180.0
—	124.–133.	CC 196.0

Thermal Unit Table 65
(index and instructions: page 16-132 to page 16-136)

Motor FLC (A)	Thermal Unit Number
0.31–0.35	B 0.44
0.36–0.39	B 0.51
0.40–0.44	B 0.57
0.45–0.50	B 0.63
0.51–0.58	B 0.71
0.59–0.65	B 0.81
0.66–0.73	B 0.92
0.74–0.82	B 1.03
0.83–0.92	B 1.16
0.93–1.03	B 1.30
1.04–1.19	B 1.45
1.20–1.34	B 1.67
1.35–1.50	B 1.88
1.51–1.67	B 2.10
1.68–1.89	B 2.40
1.90–2.14	B 2.65
2.15–2.36	B 3.00
2.37–2.65	B 3.30
2.66–2.97	B 3.70
2.98–3.47	B 4.15
3.48–3.94	B 4.85
3.95–4.44	B 5.50
4.45–4.94	B 6.25
4.95–5.52	B 6.90
5.53–5.88	B 7.70
5.89–6.52	B 8.20
6.53–7.31	B 9.10
7.32–8.21	B 10.2
8.22–9.18	B 11.5
9.19–9.90	B 12.8
10.0–11.0	B 14.0
11.1–12.4	B 15.5
12.5–13.9	B 17.5
14.0–15.7	B 19.5
15.8–17.8	B 22.0
17.9–20.0	B 25.0
20.1–22.9	B 28.0
23.0–25.0	B 32.0
Following Selections for Size 2 Only.	
23.0–25.7	B 32.0
25.8–28.6	B 36.0
28.7–32.2	B 40.0
32.3–35.8	B 45.0
35.9–40.1	B 50.0
40.2–44.4	B 56.0
44.5–50.0	B 62.0

Thermal Unit Table 66
(index and instructions: page 16-132 to page 16-136)

Motor FLC (A)	Thermal Unit Number
0.31–0.32	B 0.44
0.33–0.36	B 0.51
0.37–0.41	B 0.57
0.42–0.49	B 0.63
0.50–0.54	B 0.71
0.55–0.61	B 0.81
0.62–0.67	B 0.92
0.68–0.76	B 1.03
0.77–0.87	B 1.16
0.88–0.98	B 1.30
0.99–1.05	B 1.45
1.06–1.25	B 1.67
1.26–1.33	B 1.88
1.34–1.56	B 2.10
1.57–1.71	B 2.40
1.72–1.97	B 2.65
1.98–2.15	B 3.00
2.16–2.42	B 3.30
2.43–2.78	B 3.70
2.79–3.28	B 4.15
3.29–3.88	B 4.85
3.89–4.13	B 5.5
4.14–4.43	B 6.25
4.44–4.96	B 6.90
4.97–5.35	B 7.70
5.36–5.91	B 8.20
5.92–6.79	B 9.10
6.80–7.56	B 10.2
7.57–7.83	B 11.5
7.84–8.09	B 12.8
8.10–9.51	B 14.0
9.52–10.1	B 15.5
10.2–11.3	B 17.5
11.4–13.1	B 19.5
13.2–14.9	B 22.0
15.0–16.1	B 25.0
16.2–17.8	B 28.0
17.9–19.1	B 32.0
19.2–22.4	B 36.0
22.5–23.5	B 40.0
23.6–26.0	B 45.0

© 2019 Schneider Electric
All Rights Reserved
11/20/2019

Courtesy of Steven Engineering, Inc - (800) 258-9200 - sales@steveneng.com - www.stevenengineering.com

Thermal Unit Table 67
(index and instructions: page 16-132 to page 16-136)

Motor FLC (A)	Thermal Unit Number
3.79–4.14	B 5.50
4.15–4.44	B 6.25
4.45–5.22	B 6.90
5.23–5.29	B 7.70
5.30–5.99	B 8.20
6.00–6.82	B 9.10
6.83–7.68	B 10.2
7.69–7.92	B 11.5
7.93–8.47	B 12.8
8.48–9.99	B 14.0
10.0–10.8	B 15.5
10.9–12.3	B 17.5
12.4–12.9	B 19.5
13.0–15.1	B 22.0
15.2–16.7	B 25.0
16.8–17.9	B 28.0
18.0–20.1	B 32.0
20.2–23.8	B 36.0
23.9–25.8	B 40.0
25.9–28.3	B 45.0
28.4–29.6	B 50.0
29.7–32.1	B 56.0
32.2–34.4	B 62.0
34.5–38.3	B 70.0
38.4–39.9	B 79.0
40.0–45.0	B 88.0

Thermal Unit Table 68
(index and instructions: page 16-132 to page 16-136)

Motor FLC (A)	Thermal Unit Number
14.9–16.1	CC 20.9
16.2–17.3	CC 22.8
17.4–19.5	CC 24.6
19.6–20.7	CC 26.3
20.8–22.4	CC 28.8
22.5–23.9	CC 31.0
24.0–25.8	CC 33.3
25.9–27.6	CC 36.4
27.7–29.7	CC 39.6
29.8–31.8	CC 42.7
31.9–34.2	CC 46.6
34.3–37.0	CC 50.1
37.1–39.6	CC 54.5
39.7–42.5	CC 59.4
42.6–45.0	CC 64.3
45.1–48.6	CC 68.5
48.7–51.2	CC 74.6
51.3–56.0	CC 81.5
56.1–60.1	CC 87.7
60.2–64.3	CC 94.0
64.4–68.9	CC 103.0
69.0–71.9	CC 112.0
72.0–75.4	CC 121.0
75.5–78.9	CC 132.0
79.0–82.1	CC 143.0
82.2–86.0	CC 156.0

Thermal Unit Table 69
(index and instructions: page 16-132 to page 16-136)

Motor FLC (A)		Thermal Unit Number
1 or 2 T. U.	3 T. U.	
3.46–3.90	3.38–3.65	B 4.85
3.91–4.44	3.66–4.07	B 5.50
4.45–4.91	4.08–4.36	B 6.25
4.92–5.51	4.37–5.19	B 6.90
5.52–5.84	5.20–5.59	B 7.70
5.85–6.54	5.60–5.98	B 8.20
6.55–7.33	5.99–6.78	B 9.10
7.34–8.31	6.79–7.91	B 10.2
8.32–9.22	7.92–9.12	B 11.5
9.23–10.0	9.13–10.0	B 12.8
10.1–11.2	10.1–10.7	B 14.0
11.3–12.5	10.8–12.0	B 15.5
12.6–14.2	12.1–13.5	B 17.5
14.3–16.1	13.6–14.6	B 19.5
16.2–18.4	14.7–16.7	B 22.0
18.5–20.5	16.8–18.9	B 25.0
20.6–23.2	19.0–21.6	B 28.0
23.3–26.6	21.7–24.1	B 32.0
26.7–29.6	24.2–27.6	B 36.0
29.7–33.5	27.7–31.2	B 40.0
33.6–37.2	31.3–35.5	B 45.0
37.3–41.5	35.6–37.8	B 50.0
41.6–45.0	37.9–41.5	B 56.0
—	41.6–45.0	B 62.0

© 2019 Schneider Electric
All Rights Reserved
11/20/2019

Courtesy of Steven Engineering, Inc - (800) 258-9200 - sales@steveneng.com - www.stevenengineering.com

Thermal Unit Table 72
(index and instructions: page 16-132 to page 16-136)

Motor FLC (A)		Thermal Unit Number
1 T. U.	3 T. U.	
2.38–2.62	2.38–2.62	FB 3.33
2.63–2.94	2.63–2.94	FB 3.71
2.95–3.31	2.95–3.31	FB 4.1
3.32–3.43	3.32–3.43	FB 4.5
3.44–3.81	3.44–3.81	FB 4.75
3.82–4.32	3.82–4.32	FB 5.3
4.33–4.75	4.33–4.75	FB 6.1
4.76–5.38	4.76–5.38	FB 6.75
5.39–5.75	5.39–5.75	FB 7.45
5.76–5.97	5.76–5.97	FB 7.8
5.98–6.30	5.98–6.30	FB 8.21
6.31–6.55	6.31–6.55	FB 8.6
6.56–6.89	6.56–6.89	FB 9.0
6.90–7.14	6.90–7.14	FB 9.5
7.15–7.36	7.15–7.36	FB 10.0
7.37–8.30	7.37–8.30	FB 10.6
8.31–8.59	8.31–8.59	FB 11.2
8.60–9.01	8.60–9.01	FB 12.1
9.02–9.68	9.02–9.68	FB 13.1
9.69–9.99	9.69–9.99	FB 13.9
10.0–10.9	10.0–10.9	FB 14.8
11.0–11.3	11.0–11.3	FB 15.6
11.4–12.4	11.4–12.0	FB 16.4
12.5–12.9	—	FB 17.6
13.0–14.0	—	FB 18.4
14.1–14.5	—	FB 19.4
14.6–15.7	—	FB 21.1
15.8–16.6	—	FB 22.6
16.7–18.0	—	FB 23.6
Following Selections for Size M–1 & M–1P Only.		
—	11.4–12.4	FB 16.4
—	12.5–12.9	FB 17.6
—	13.0–14.0	FB 18.4
—	14.1–14.5	FB 19.4
—	14.6–15.7	FB 21.1
—	15.8–16.6	FB 22.6
16.7–17.6	16.7–17.6	FB 23.6
17.7–18.3	17.7–18.3	FB 24.8
18.4–19.4	18.4–19.4	FB 26.7
19.5–20.5	19.5–20.5	FB 28.3
20.6–21.7	20.6–21.7	FB 29.6
21.8–22.8	21.8–22.8	FB 30.5
22.9–24.3	22.9–24.3	FB 32.5
24.4–24.7	24.4–24.7	FB 34.1
24.8–25.4	24.8–25.4	FB 35.0
25.5–26.0	25.5–26.0	FB 36.6
Following Selections for Size M–1P Only.		
26.1–27.7	—	FB 38.3
27.8–28.9	—	FB 40.2
29.0–30.6	—	FB 42.0
30.7–32.5	—	FB 44.0
32.6–36.0	—	FB 46.0

Thermal Unit Table 73
(index and instructions: page 16-132 to page 16-136)

Motor FLC (A)		Thermal Unit Number
1 T. U.	3 T. U.	
2.42–2.67	2.42–2.67	FB 3.33
2.68–3.00	2.68–3.00	FB 3.71
3.01–3.36	3.01–3.36	FB 4.1
3.37–3.53	3.37–3.53	FB 4.5
3.54–3.91	3.54–3.91	FB 4.75
3.92–4.41	3.92–4.41	FB 5.3
4.42–4.83	4.42–4.83	FB 6.1
4.84–5.45	4.84–5.45	FB 6.75
5.46–5.89	5.46–5.89	FB 7.45
5.90–6.04	5.90–6.04	FB 7.8
6.05–6.55	6.05–6.55	FB 8.21
6.56–6.72	6.56–6.72	FB 8.6
6.73–7.00	6.73–7.00	FB 9.0
7.01–7.39	7.01–7.39	FB 9.5
7.40–7.54	7.40–7.54	FB 10.0
7.55–8.41	7.55–8.41	FB 10.6
8.42–8.91	8.42–8.91	FB 11.2
8.92–9.16	8.92–9.16	FB 12.1
9.17–10.0	9.17–10.0	FB 13.1
10.1–10.3	10.1–10.3	FB 13.9
10.4–11.4	10.4–11.4	FB 14.8
11.5–11.8	11.5–11.8	FB 15.6
11.9–12.9	11.9–12.9	FB 16.4
13.0–13.4	—	FB 17.6
13.5–14.2	—	FB 18.4
14.3–15.1	—	FB 19.4
15.2–18.0	—	FB 21.1
Following Selections for Size M–1 & M–1P Only.		
—	11.5–11.8	FB 15.6
—	11.9–12.9	FB 16.4
—	13.0–13.4	FB 17.6
—	13.5–14.2	FB 18.4
—	14.3–15.1	FB 19.4
15.2–17.1	15.2–17.1	FB 21.1
17.2–18.0	17.2–18.0	FB 22.6
18.1–18.9	18.1–18.9	FB 23.6
19.0–19.7	19.0–19.7	FB 24.8
19.8–20.9	19.8–20.9	FB 26.7
21.0–21.9	21.0–21.9	FB 28.3
22.0–23.1	22.0–23.1	FB 29.6
23.2–24.3	23.2–24.3	FB 30.5
24.4–25.5	24.4–25.5	FB 32.6
25.6–26.0	25.6–26.0	FB 34.1
Following Selections for Size M–1P Only.		
26.1–26.8	—	FB 35.0
26.9–27.3	—	FB 36.6
27.4–28.7	—	FB 38.3
28.8–30.2	—	FB 40.2
30.3–31.9	—	FB 42.0
32.0–36.0	—	FB 44.0

© 2019 Schneider Electric
All Rights Reserved
11/20/2019

Courtesy of Steven Engineering, Inc - (800) 258-9200 - sales@steveneng.com - www.stevenengineering.com

Thermal Unit Table 74
(index and instructions: page 16-132 to page 16-136)

Motor FLC (A)		Thermal Unit Number
1 T. U.	3 T. U.	
2.23–2.47	2.23–2.47	FB 3.33
2.48–2.76	2.48–2.76	FB 3.71
2.77–3.04	2.77–3.04	FB 4.1
3.05–3.24	3.05–3.24	FB 4.5
3.25–3.61	3.25–3.61	FB 4.75
3.62–4.19	3.62–4.19	FB 5.3
4.20–4.62	4.20–4.62	FB 6.1
4.63–5.14	4.63–5.14	FB 6.75
5.15–5.39	5.15–5.39	FB 7.45
5.40–5.69	5.40–5.69	FB 7.8
5.70–5.99	5.70–5.99	FB 8.21
6.00–6.29	6.00–6.29	FB 8.6
6.30–6.64	6.30–6.64	FB 9.0
6.65–6.99	6.65–6.99	FB 9.5
7.00–7.39	7.00–7.39	FB 10.0
7.40–7.79	7.40–7.79	FB 10.6
7.80–7.94	7.80–7.94	FB 11.2
7.95–8.49	7.95–8.49	FB 12.1
8.50–8.99	8.50–8.99	FB 13.1
9.00–9.59	9.00–9.59	FB 13.9
9.60–10.1	9.60–10.1	FB 14.8
10.2–10.6	10.2–10.6	FB 15.6
10.7–11.3	10.7–11.3	FB 16.4
11.4–12.0	11.4–12.0	FB 17.6
12.0–12.6	—	FB 18.4
12.7–13.8	—	FB 19.4
13.9–14.7	—	FB 21.1
14.8–15.2	—	FB 22.6
15.3–16.2	—	FB 23.6
16.3–18.0	—	FB 24.8
Following Selections for Size 1 Only.		
—	12.0–12.6	FB 18.4
—	12.7–13.8	FB 19.4
13.9–14.7	13.9–14.7	FB 21.1
14.8–15.2	14.8–15.2	FB 22.6
15.3–16.2	15.3–16.2	FB 23.6
16.3–17.4	16.3–17.4	FB 24.8
17.5–18.5	17.5–18.5	FB 26.7
18.6–19.6	18.6–19.6	FB 28.3
19.7–20.2	19.7–20.2	FB 29.6
20.3–21.5	20.3–21.5	FB 30.5
21.6–22.4	21.6–22.4	FB 32.6
22.5–23.2	22.5–23.2	FB 34.1
23.3–24.3	23.3–24.3	FB 35.0
24.4–25.4	24.4–25.4	FB 36.6
25.5–26.0	25.5–26.0	FB 38.3

Thermal Unit Table 75
(index and instructions: page 16-132 to page 16-136)

Motor FLC (A)	Thermal Unit Number
3.22–3.57	FB 4.75
3.58–4.14	FB 5.3
4.15–4.56	FB 6.1
4.57–5.10	FB 6.75
5.11–5.39	FB 7.45
5.40–5.64	FB 7.8
5.65–5.96	FB 8.21
5.97–6.25	FB 8.6
6.26–6.58	FB 9.0
6.59–6.91	FB 9.5
6.92–7.41	FB 10.0
7.42–7.82	FB 10.6
7.83–8.32	FB 11.2
8.33–8.89	FB 12.1
8.90–9.47	FB 13.1
9.48–10.0	FB 13.9
10.1–10.5	FB 14.8
10.6–11.1	FB 15.6
11.2–12.0	FB 16.4
12.1–12.7	FB 17.6
12.8–13.5	FB 18.4
13.6–14.6	FB 19.4
14.7–15.7	FB 21.1
15.8–16.5	FB 22.6
16.6–17.4	FB 23.6
17.5–18.8	FB 24.8
18.9–20.1	FB 26.7
20.2–21.0	FB 28.3
21.1–21.6	FB 29.6
21.7–23.3	FB 30.5
23.4–24.3	FB 32.6
24.4–25.0	FB 34.1
25.1–26.3	FB 35.0
26.4–27.6	FB 36.6
27.7–29.1	FB 38.3
29.2–30.4	FB 40.2
30.5–32.0	FB 42.0
32.1–33.3	FB 44.0
33.4–35.2	FB 46.0
35.3–37.0	FB 48.0
37.1–38.5	FB 50.5
38.6–40.7	FB 52.5
40.8–45.0	FB 55.5

Thermal Unit Table 76
(index and instructions: page 16-132 to page 16-136)

Motor FLC (A)	Thermal Unit Number
19.9–20.8	FB 26.7
20.9–22.2	FB 28.3
22.3–23.8	FB 29.6
23.9–25.4	FB 30.5
25.5–27.2	FB 32.6
27.3–29.2	FB 34.1
29.3–31.9	FB 38.3
32.0–33.8	FB 40.2
33.9–36.1	FB 42.0
36.2–38.5	FB 44.0
38.6–41.4	FB 46.0
41.5–43.6	FB 48.0
43.7–45.9	FB 50.5
46.0–48.2	FB 52.5
48.3–50.7	FB 55.5
50.8–53.9	FB 58.0
54.0–56.7	FB 60.0
56.8–60.8	FB 63.5
60.9–67.6	FB 69.0
67.7–73.6	FB 77.0
73.7–82.9	FB 84.0
83.0–86.0	FB 92.0

Thermal Unit Table 77
(index and instructions: page 16-132 to page 16-136)

Motor FLC (A)	Thermal Unit Number
48.0–50.9	FB 50.5
51.0–53.7	FB 52.5
53.8–57.0	FB 55.5
57.1–60.4	FB 58.0
60.5–64.0	FB 60.0
64.1–71.9	FB 63.5
72.0–83.9	FB 69.0
84.0–93.1	FB 77.0
93.2–104	FB 84.0
105–109	FB 92.0
110–123	FB 105.0
124–133	FB 115.0

© 2019 Schneider Electric
All Rights Reserved
11/20/2019

Courtesy of Steven Engineering, Inc - (800) 258-9200 - sales@steveneng.com - www.stevenengineering.com

Thermal Unit Table 78
(index and instructions: page 16-132 to page 16-136)

Motor FLC (A)		Thermal Unit Number
1 T. U.	2 T. U. or 3 T. U.	
2.26–2.51 2.52–2.82 2.83–3.09	2.26–2.51 2.52–2.82 2.83–3.09	FB 3.33 FB 3.71 FB 4.1
3.10–3.30 3.31–3.69 3.70–4.27	3.10–3.30 3.31–3.69 3.70–4.27	FB 4.5 FB 4.75 FB 5.3
4.28–4.72 4.73–5.25 5.26–5.53	4.28–4.72 4.73–5.25 5.26–5.53	FB 6.1 FB 6.75 FB 7.45
5.54–5.81 5.82–6.14 6.15–6.44	5.54–5.81 5.82–6.14 6.15–6.44	FB 7.8 FB 8.21 FB 8.6
6.45–6.81 6.82–7.19 7.20–7.59	6.45–6.81 6.82–7.19 7.20–7.59	FB 9.0 FB 9.5 FB 10.0
7.60–7.99 8.00–8.17 8.18–8.74	7.60–7.99 8.00–8.17 8.18–8.74	FB 10.6 FB 11.2 FB 12.1
8.75–9.31 9.32–9.94 9.95–10.5	8.75–9.31 9.32–9.94 9.95–10.5	FB 13.1 FB 13.9 FB 14.8
10.6–11.1 11.2–11.9 12.0–12.4	10.6–11.1 11.2–12.0 —	FB 15.6 FB 16.4 FB 17.6
12.5–13.1 13.2–14.3 14.4–15.3	— — —	FB 18.4 FB 19.4 FB 21.1
15.4–15.9 16.0–18.0	— —	FB 22.6 FB 23.6
Following Selections for Size 1 Only.		
— — —	12.0–12.4 12.5–13.1 13.2–14.3	FB 17.6 FB 18.4 FB 19.4
14.4–15.3 15.4–15.9 16.0–16.9	14.4–15.3 15.4–15.9 16.0–16.9	FB 21.1 FB 22.6 FB 23.6
17.0–18.3 18.4–19.5 19.6–20.5	17.0–18.3 18.4–19.5 19.6–20.5	FB 24.8 FB 26.7 FB 28.3
20.6–21.1 21.2–22.6 22.7–23.7	20.6–21.1 21.2–22.6 22.7–23.7	FB 29.6 FB 30.5 FB 32.6
23.8–24.3 24.4–26.0	23.8–24.3 24.4–26.0	FB 35.0

Thermal Unit Table 79
(index and instructions: page 16-132 to page 16-136)

Motor FLC (A)	Thermal Unit Number
3.31–3.67 3.68–4.23 4.24–4.69	FB 4.75 FB 5.3 FB 6.1
4.70–5.21 5.22–5.49 5.50–5.74	FB 6.75 FB 7.45 FB 7.8
5.75–6.07 6.08–6.35 6.36–6.71	FB 8.21 FB 8.6 FB 9.0
6.72–7.03 7.04–7.53 7.54–7.91	FB 9.5 FB 10.0 FB 10.6
7.92–8.53 8.54–9.14 9.15–9.71	FB 11.2 FB 12.1 FB 13.1
9.72–10.2 10.3–10.8 10.9–11.5	FB 13.9 FB 14.8 FB 15.6
11.6–12.3 12.4–13.0 13.1–13.9	FB 16.4 FB 17.6 FB 18.4
14.0–15.1 15.2–16.1 16.2–16.9	FB 19.4 FB 21.1 FB 22.6
17.0–17.9 18.0–19.4 19.5–20.7	FB 23.6 FB 24.8 FB 26.7
20.8–21.7 21.8–22.3 22.4–23.9	FB 28.3 FB 29.6 FB 30.5
24.0–25.1 25.2–25.9 26.0–27.1	FB 32.6 FB 34.1 FB 35.0
27.2–28.6 28.7–30.1 30.2–31.7	FB 36.6 FB 38.3 FB 40.2
31.8–33.3 33.4–34.5 34.6–36.5	FB 42.0 FB 44.0 FB 46.0
36.6–38.5 38.6–39.9 40.0–45.0	FB 48.0 FB 50.5 FB 52.5

Thermal Unit Table 80
(index and instructions: page 16-132 to page 16-136)

Motor FLC (A)	Thermal Unit Number
20.5–21.7 21.8–23.1 23.2–24.8	FB 26.7 FB 28.3 FB 29.6
24.9–26.5 26.6–28.4 28.5–30.4	FB 30.5 FB 32.6 FB 34.1
30.5–32.8 32.9–34.9 35.0–37.3	FB 38.3 FB 40.2 FB 42.0
37.4–39.8 39.9–42.5 42.6–45.8	FB 44.0 FB 46.0 FB 48.0
45.9–48.2 48.3–50.6 50.7–53.1	FB 50.5 FB 52.5 FB 55.5
53.2–56.5 56.6–59.4 59.5–63.4	FB 58.0 FB 60.0 FB 63.5
63.5–71.0 71.1–78.8 78.9–86.0	FB 69.0 FB 77.0 FB 84.0

Thermal Unit Table 81
(index and instructions: page 16-132 to page 16-136)

Motor FLC (A)	Thermal Unit Number
52.2–55.6 55.7–58.8 58.9–62.5	FB 50.5 FB 52.5 FB 55.5
62.6–66.0 66.1–70.1 70.2–78.6	FB 58.0 FB 60.0 FB 63.5
78.7–92.0 92.1–102 103–114	FB 69.0 FB 77.0 FB 84.0
115–123 124–133	FB 92.0 FB 105.0

© 2019 Schneider Electric
All Rights Reserved
11/20/2019

Courtesy of Steven Engineering, Inc - (800) 258-9200 - sales@steveneng.com - www.stevenengineering.com

Thermal Unit Table 82
(index and instructions: page 16-132 to page 16-136)

Motor FLC (A)	Thermal Unit Number
2.36–2.63 2.64–2.96 2.97–3.23	FB 3.33 FB 3.71 FB 4.1
3.24–3.45 3.46–3.86 3.87–4.44	FB 4.5 FB 4.75 FB 5.3
4.45–4.95 4.96–5.47 5.48–5.75	FB 6.1 FB 6.75 FB 7.45
5.76–6.09 6.10–6.42 6.43–6.75	FB 7.8 FB 8.21 FB 8.6
6.76–7.16 7.17–7.43 7.44–7.99	FB 9.0 FB 9.5 FB 10.0
8.00–8.46 8.47–9.19 9.20–9.74	FB 10.6 FB 11.2 FB 12.1
9.75–10.3 10.4–10.8 10.9–11.6	FB 13.1 FB 13.9 FB 14.8
11.7–12.2 12.3–13.1 13.2–13.7	FB 15.6 FB 16.4 FB 17.6
13.8–14.3 14.4–15.5 15.6–16.7	FB 18.4 FB 19.4 FB 21.1
16.8–17.6 17.7–18.6 18.7–19.9	FB 22.6 FB 23.6 FB 24.8
20.0–21.1 21.2–25.0	FB 92.0 FB 105.0

Thermal Unit Table 83
(index and instructions: page 16-132 to page 16-136)

Motor FLC (A)	Thermal Unit Number
2.30–2.60 2.61–2.87 2.88–3.17	FB 3.33 FB 3.71 FB 4.1
3.18–3.37 3.38–3.76 3.77–4.29	FB 4.5 FB 4.75 FB 5.3
4.30–4.75 4.76–5.26 5.27–5.51	FB 6.1 FB 6.75 FB 7.45
5.52–5.78 5.79–6.13 6.14–6.41	FB 7.8 FB 8.21 FB 8.6
6.42–6.75 6.76–7.09 7.10–7.57	FB 9.0 FB 9.5 FB 10.0
7.58–7.90 7.91–8.81 8.82–9.47	FB 10.6 FB 11.2 FB 12.1
9.48–10.0 10.1–10.7 10.8–11.4	FB 13.1 FB 13.9 FB 14.8
11.5–12.1 12.2–13.1 13.2–13.7	FB 15.6 FB 16.4 FB 17.6
13.8–14.7 14.8–16.0 16.1–17.3	FB 18.4 FB 19.4 FB 21.1
17.4–18.2 18.3–19.4 19.5–20.7	FB 22.6 FB 23.6 FB 24.8
20.8–22.3 22.4–23.5 23.6–24.2	FB 26.7 FB 28.3 FB 29.6
24.3–26.0	FB 30.5

Thermal Unit Table 84
(index and instructions: page 16-132 to page 16-136)

Motor FLC (A)	Thermal Unit Number
3.38–3.78 3.79–4.37 4.38–4.87	FB 4.75 FB 5.3 FB 6.1
4.88–5.51 5.52–5.73 5.74–6.09	FB 6.75 FB 7.45 FB 7.8
6.10–6.44 6.45–6.75 6.76–7.15	FB 8.21 FB 8.6 FB 9.0
7.16–7.57 7.58–8.07 8.08–8.47	FB 9.5 FB 10.0 FB 10.6
8.48–8.81 8.82–9.46 9.47–10.1	FB 11.2 FB 12.1 FB 13.1
10.2–10.8 10.9–11.4 11.5–12.1	FB 13.9 FB 14.8 FB 15.6
12.2–13.1 13.2–13.8 13.9–14.8	FB 16.4 FB 17.6 FB 18.4
14.9–16.1 16.2–17.4 17.5–18.3	FB 19.4 FB 21.1 FB 22.6
18.4–19.5 19.6–21.0 21.1–22.5	FB 23.6 FB 24.8 FB 26.7
22.6–23.7 23.8–24.5 24.6–26.4	FB 28.3 FB 29.6 FB 30.5
26.5–27.7 27.8–28.7 28.8–29.9	FB 32.6 FB 34.1 FB 35.0
30.0–31.8 31.9–33.5 33.6–35.1	FB 36.6 FB 38.3 FB 40.2
35.2–37.1 37.2–38.8 38.9–41.1	FB 42.0 FB 44.0 FB 46.0
41.2–45.0	FB 48.0

Thermal Unit Table 85
(index and instructions: page 16-132 to page 16-136)

Motor FLC (A)	Thermal Unit Number
42.9–45.4 45.6–48.3 48.4–52.4	FB 44.0 FB 46.0 FB 48.0
52.5–55.9 56.0–59.8 59.9–63.8	FB 50.5 FB 52.5 FB 55.5
63.9–67.9 68.0–72.6 72.7–83.2	FB 58.0 FB 60.0 FB 63.5
83.3–94.7 94.8–105 106–116	FB 69.0 FB 77.0 FB 84.0
117–121 122–133	FB 92.0 FB 105.0

© 2019 Schneider Electric
All Rights Reserved
11/20/2019

Courtesy of Steven Engineering, Inc - (800) 258-9200 - sales@steveneng.com - www.stevenengineering.com

Thermal Unit Table 86
(index and instructions: page 16-132 to page 16-136)

Motor FLC (A)	Thermal Unit Number
0.43–0.44	A .49
0.45–0.47	A .54
0.48–0.53	A .59
0.54–0.61	A .65
0.62–0.65	A .71
0.66–0.71	A .78
0.72–0.79	A .86
0.80–0.86	A .95
0.87–0.96	A 1.02
0.97–1.04	A 1.16
1.05–1.17	A 1.25
1.18–1.31	A 1.39
1.32–1.38	A 1.54
1.39–1.47	A 1.63
1.48–1.57	A 1.75
1.58–1.65	A 1.86
1.66–1.77	A 1.99
1.78–1.93	A 2.15
1.94–2.18	A 2.31
2.19–2.46	A 2.57
2.47–2.68	A 2.81
2.69–2.87	A 3.61
2.88–3.07	A 3.95
3.08–3.59	A 4.32
3.60–3.79	A 4.79
3.80–4.27	A 5.30
4.28–4.59	A 5.78
4.60–4.90	A 6.20
4.91–5.06	A 6.99
5.07–5.44	A 7.65
5.45–6.24	A 8.38
6.25–7.21	A 9.25
7.22–7.69	A 9.85
7.70–8.24	A 11.0
8.25–8.81	A 11.9
8.82–9.32	A 13.2
9.33–9.99	A 14.1
10.0–10.5	A 14.8
10.6–11.5	A 16.2
11.6–12.2	A 17.9
12.3–13.3	A 21.3
13.4–15.8	A 25.2
15.9–18.4	A 27.1
18.5–20.5	A 29.5
20.6–21.5	A 31.9
21.6–23.9	A 33.8
24.0–26.8	A 35.9
26.9–28.2	A 40.0
28.3–29.8	A 42.3
29.9–32.0	A 44.7

Thermal Unit Table 87
(index and instructions: page 16-132 to page 16-136)

Motor FLC (A)	Thermal Unit Number
0.40–0.41	A .49
0.42–0.45	A .54
0.46–0.51	A .59
0.52–0.58	A .65
0.59–0.63	A .71
0.64–0.68	A .78
0.69–0.76	A .86
0.77–0.83	A .95
0.84–0.93	A 1.02
0.94–1.01	A 1.16
1.02–1.14	A 1.25
1.15–1.28	A 1.39
1.29–1.34	A 1.54
1.35–1.44	A 1.63
1.45–1.55	A 1.75
1.56–1.61	A 1.86
1.62–1.71	A 1.99
1.72–1.85	A 2.15
1.86–2.04	A 2.31
2.05–2.38	A 2.57
2.39–2.60	A 2.81
2.61–2.77	A 3.61
2.78–2.98	A 3.95
2.99–3.40	A 4.32
3.41–3.64	A 4.79
3.65–4.08	A 5.30
4.09–4.38	A 5.78
4.39–4.68	A 6.20
4.69–4.79	A 6.99
4.80–5.11	A 7.65
5.12–5.84	A 8.38
5.85–6.70	A 9.25
6.71–7.18	A 9.85
7.19–7.70	A 11.0
7.71–8.14	A 11.9
8.15–8.56	A 13.2
8.57–9.15	A 14.1
9.16–9.80	A 14.8
9.81–10.6	A 16.2
10.7–11.0	A 17.9

Thermal Unit Table 88
(index and instructions: page 16-132 to page 16-136)

Motor FLC (A)	Thermal Unit Number
0.39–0.40	A .49
0.41–0.44	A .54
0.45–0.49	A .59
0.50–0.57	A .65
0.58–0.61	A .71
0.62–0.66	A .78
0.67–0.73	A .86
0.74–0.80	A .95
0.81–0.90	A 1.02
0.91–0.97	A 1.16
0.98–1.09	A 1.25
1.10–1.23	A 1.39
1.24–1.57	A 1.86
1.58–1.66	A 1.99
1.67–1.79	A 2.15
1.80–1.99	A 2.31
2.00–2.31	A 2.57
2.32–2.50	A 2.81
2.51–2.66	A 3.61
2.67–2.85	A 3.95
2.86–3.26	A 4.32
3.27–3.49	A 4.79
3.50–3.92	A 5.30
3.93–4.20	A 5.78
4.21–4.49	A 6.20
4.50–4.64	A 6.99
4.65–4.94	A 7.65
4.95–5.62	A 8.38
5.63–6.39	A 9.25
6.40–6.82	A 9.85
6.83–7.27	A 11.0
7.28–7.71	A 11.9
7.72–8.13	A 13.2
8.14–8.64	A 14.1
8.65–9.15	A 14.8
9.16–9.97	A 16.2
9.98–11.0	A 17.9

Thermal Unit Table 89
(index and instructions: page 16-132 to page 16-136)

Motor FLC (A)	Thermal Unit Number
10.0–11.1	B 17.5
11.2–12.0	B 19.5
12.1–13.3	B 22.0
13.4–15.1	B 25.0
15.2–17.1	B 28.0
17.2–18.6	B 32.0
18.7–21.4	B 36.0
21.5–25.7	B 40.0
25.8–28.2	B 45.0
28.3–29.7	B 50.0
29.8–31.2	B 56.0
31.3–32.1	B 62.0
32.2–35.7	B 70.0
35.8–40.7	B 79.0
40.8–48.0	B 88.0

Thermal Unit Table 90
(index and instructions: page 16-132 to page 16-136)

Motor FLC (A)	Thermal Unit Number
4.88–5.13	A 7.65
5.14–5.85	A 8.38
5.86–6.67	A 9.25
6.68–7.09	A 9.85
7.10–7.62	A 11.0
7.63–8.04	A 11.9
8.05–8.46	A 13.2
8.47–9.11	A 14.1
9.12–9.69	A 14.8
9.70–10.5	A 16.2
10.6–11.6	A 17.9
11.7–12.3	A 21.3
12.4–14.6	A 25.2
14.7–16.8	A 27.1
16.9–17.9	A 29.5
18.0–18.7	A 31.9
18.8–19.8	A 33.8
19.9–21.4	A 35.9
21.5–22.8	A 40.0
22.9–23.8	A 42.3
23.9–26.0	A 44.7

© 2019 Schneider Electric
All Rights Reserved
11/20/2019

Courtesy of Steven Engineering, Inc - (800) 258-9200 - sales@steveneng.com - www.stevenengineering.com

Thermal Unit Table 91
(index and instructions: page 16-132 to page 16-136)

Motor FLC (A)	Thermal Unit Number
4.80–5.07 5.08–5.73 5.74–6.48	A 7.65 A 8.38 A 9.25
6.49–6.90 6.91–7.25 7.26–7.81	A 9.85 A 11.0 A 11.9
7.82–8.29 8.30–8.81 8.82–9.40	A 13.2 A 14.1 A 14.8
9.41–10.0 10.1–11.1 11.2–11.7	A 16.2 A 17.9 A 21.3
11.8–13.7 13.8–16.0 16.1–16.9	A 25.2 A 27.1 A 29.5
17.0–17.7 17.8–18.7 18.8–20.2	A 31.9 A 33.8 A 35.9
20.3–21.4 21.5–22.5 22.6–23.8	A 40.0 A 42.3 A 44.7
23.9–26.0	A 48.0

Thermal Unit Table 92
(index and instructions: page 16-132 to page 16-136)

Motor FLC (A)	Thermal Unit Number
10.5–11.7 11.8–12.5 12.6–14.0	B 17.5 B 19.5 B 22.0
14.1–15.8 15.9–18.0 18.1–19.6	B 25.0 B 28.0 B 32.0
19.7–23.5 23.6–27.4 27.5–30.5	B 36.0 B 40.0 B 45.0
30.6–32.2 32.3–34.0 34.1–35.2	B 50.0 B 56.0 B 62.0
35.3–39.5 39.6–43.9 44.0–48.0	B 70.0 B 79.0 B 88.0

Thermal Unit Table 93
(index and instructions: page 16-132 to page 16-136)

Motor FLC (A)	Thermal Unit Number
23.8–25.2 25.3–26.8 26.9–28.4	CC 36.4 CC 39.6 CC 42.7
28.5–30.3 30.4–32.1 32.2–34.2	CC 46.6 CC 50.1 CC 54.5
34.3–36.3 36.4–40.2 40.3–43.1	CC 59.4 CC 64.3 CC 68.5
43.2–45.9 46.0–49.2 49.3–51.6	CC 74.6 CC 81.5 CC 87.7
51.7–54.2 54.3–55.7 55.8–60.3	CC 94.0 CC 103.0 CC 112.0
60.4–63.5 63.6–67.1 67.2–70.3	CC 121.0 CC 132.0 CC 143.0
70.4–74.1 74.2–78.3 78.4–83.3	CC 156.0 CC 167.0 CC 180.0
83.4–86.0	CC 196.0

Thermal Unit Table 94
(index and instructions:page 16-132 to page 16-136)

Motor FLC (A)	Thermal Unit Number
25.8–27.5 27.6–29.4 29.5–31.4	CC 36.4 CC 39.6 CC 42.7
31.5–33.2 33.3–36.2 36.3–38.8	CC 46.6 CC 50.1 CC 54.5
38.9–41.6 41.7–44.7 44.8–47.9	CC 59.4 CC 64.3 CC 68.5
48.0–50.9 51.0–54.4 54.5–57.4	CC 74.6 CC 81.5 CC 87.7
57.5–60.6 60.7–63.9 64.0–68.4	CC 94.0 CC 103.0 CC 112.0
68.5–73.4 73.5–78.7 78.8–83.8	CC 121.0 CC 132.0 CC 143.0
83.9–86.0	CC 156.0

Thermal Unit Table 95
(index and instructions: page 16-132 to page 16-136)

Motor FLC (A)	Thermal Unit Number
42.5–44.7 44.8–47.9 48.0–51.2	CC 64.3 CC 68.5 CC 74.6
51.3–55.2 55.3–59.4 59.5–63.8	CC 81.5 CC 87.7 CC 94.0
63.9–68.8 68.9–73.8 73.9–77.7	CC 103.0 CC 112.0 CC 121.0
77.8–82.5 82.6–86.6 86.7–91.9	CC 132.0 CC 143.0 CC 156.0
92.0–97.2 97.3–104 105–114	CC 167.0 CC 180.0 CC 196.0
115–123 124–150	CC 208.0 CC 219.0

Thermal Unit Table 96
(index and instructions: page 16-132 to page 16-136)

Motor FLC (A)	Thermal Unit Number
49.5–52.0 52.1–54.8 54.9–58.7	CC 64.3 CC 68.5 CC 74.6
58.8–63.3 63.4–68.3 68.4–73.6	CC 81.5 CC 87.7 CC 94.0
73.7–79.4 79.5–85.5 85.6–89.7	CC 103.0 CC 112.0 CC 121.0
89.8–94.8 94.9–99.9 100–105	CC 132.0 CC 143.0 CC 156.0
106–111 112–126 127–131	CC 167.0 CC 180.0 CC 196.0
132–141 142–150	CC 208.0 CC 219.0

© 2019 Schneider Electric
All Rights Reserved
11/20/2019

Courtesy of Steven Engineering, Inc - (800) 258-9200 - sales@steveneng.com - www.stevenengineering.com

Thermal Unit Table 103
(index and instructions: page 16-132 to page 16-136)

Motor FLC (A)	Thermal Unit Number
40.8–45.5	B 1.03
45.6–49.9	B 1.16
51.0–57.5	B 1.30
57.6–65.9	B 1.45
66.0–73.1	B 1.67
73.2–81.5	B 1.88
81.6–92.3	B 2.10
92.4–104	B 2.40
105–114	B 2.65
115–128	B 3.00
129–140	B 3.30
141–160	B 3.70
161–193	B 4.15
194–209	B 4.85
210–232	B 5.50
233–248	B 6.25
249–266	B 6.90

Thermal Unit Table 104
(index and instructions: page 16-132 to page 16-136)

Motor FLC (A)	Thermal Unit Number	Max. Fuse Rating (A)	
0.65–0.73	B 1.03	1.50	
0.74–0.82	B 1.16	1.50	
0.93–0.91	B 1.30	1.60	
0.92–1.04	B 1.45	2.00	
1.05–1.16	B 1.67	2.00	
1.17–1.26	B 1.88	2.25	
1.27–1.47	B 2.10	2.60	
1.48–1.65	B 2.40	3.00	
1.66–1.89	B 2.65	3.50	
1.90–2.17	B 3.00	4.00	
2.18–2.49	B 3.30	4.50	
2.50–2.79	B 3.70	5.00	
2.80–3.13	B 4.15	5.60	
3.14–3.36	B 4.85	6.00	
3.37–3.69	B 5.50	7.00	
3.70–3.92	B 6.25	7.00	
3.93–4.42	B 6.90	8.00	
4.43–4.99	B 7.70	9.00	
5.00–5.27	B 8.20	10.0	
5.28–5.84	B 9.10	12.0	
5.85–6.61	B 10.2	12.0	
6.62–7.42	B 11.5	15.0	
7.43–8.02	B 12.8	15.0	
8.03–8.53	B 14.0	15.0	
8.54–9.34	B 15.5	17.5	
9.35–10.1	B 17.5	17.5	
10.2–10.8	B 19.5	20.0	
10.9–12.0	B 22.0	25.0	
12.1–13.0	B 25.0	25.0	
13.1–15.5	B 28.0	30.0	
		600 V Max.	250 V Max.
15.6–17.9	B 32.0	30	30
18.0–21.4	B 36.0	30	40
21.5–25.1	B 40.0	30	40
25.2–27.0	B 45.0	30	40

Thermal Unit Table 105
(index and instructions: page 16-132 to page 16-136)

Motor FLC (A)	Thermal Unit Number
105–112	CC 74.6
113–122	CC 81.5
123–131	CC 87.7
132–142	CC 94.0
143–153	CC 103.0
154–157	CC 112.0
158–169	CC 121.0
170–181	CC 132.0
182–195	CC 143.0
196–209	CC 156.0
210–227	CC 167.0
228–247	CC 180.0
248–266	CC 196.0

Thermal Unit Table 109
(index and instructions: page 16-132 to page 16-136)

Motor FLC (A)	Thermal Unit Number
0.56–0.63	B 0.81
0.64–0.68	B 0.92
0.69–0.77	B 1.03
0.78–0.85	B 1.16
0.86–0.97	B 1.30
0.98–1.09	B 1.45
1.10–1.21	B 1.67
1.22–1.33	B 1.88
1.34–1.53	B 2.10
1.54–1.73	B 2.40
1.74–1.89	B 2.65
1.90–2.17	B 3.00
2.18–2.53	B 3.30
2.54–2.87	B 3.70
2.88–3.22	B 4.15
3.23–3.49	B 4.85
3.50–3.85	B 5.50
3.86–4.11	B 6.25
4.12–4.70	B 6.90
4.71–5.21	B 7.70
5.22–5.53	B 8.20
5.54–6.17	B 9.10
6.18–7.02	B 10.2
7.03–7.92	B 11.5
7.93–8.61	B 12.8
8.62–9.17	B 14.0
9.18–10.0	B 15.5
10.1–11.0	B 17.5
11.1–11.8	B 19.5
11.9–13.5	B 22.0
13.6–15.3	B 25.0
15.4–17.4	B 28.0
17.5–19.4	B 32.0
19.5–22.2	B 36.0
22.3–25.1	B 40.0
25.2–27.0	B 45.0

© 2019 Schneider Electric
All Rights Reserved
11/20/2019

Courtesy of Steven Engineering, Inc - (800) 258-9200 - sales@steveneng.com - www.stevenengineering.com

Thermal Unit Table 110
(index and instructions: page 16-132 to page 16-136)

Motor FLC (A)	Thermal Unit Number
3.94–4.45	B 6.90
4.46–4.97	B 7.70
4.98–5.28	B 8.20
5.29–5.97	B 9.10
5.98–6.89	B 10.2
6.90–7.92	B 11.5
7.93–8.71	B 12.8
8.72–9.27	B 14.0
9.28–10.2	B 15.5
10.3–11.4	B 17.5
11.5–12.3	B 19.5
12.4–13.9	B 22.0
14.0–15.8	B 25.0
15.9–17.9	B 28.0
18.0–19.9	B 32.0
20.0–22.8	B 36.0
22.9–25.4	B 40.0
25.5–28.9	B 45.0
29.0–30.8	B 50.0
30.9–32.5	B 56.0
32.6–34.9	B 62.0
35.0–39.7	B 70.0
39.8–44.7	B 79.0

Thermal Unit Table 111
(index and instructions: page 16-132 to page 16-136)

Motor FLC (A)	Thermal Unit Number
14.0–14.9	CC 20.9
15.0–16.2	CC 22.8
16.3–17.2	CC 24.6
17.3–18.7	CC 26.3
18.8–20.2	CC 28.8
20.3–21.7	CC 31.0
21.8–23.3	CC 33.3
23.4–25.2	CC 36.4
25.3–27.1	CC 39.6
27.2–29.4	CC 42.7
29.5–31.6	CC 46.6
31.7–34.0	CC 50.1
34.1–36.8	CC 54.5
36.9–39.8	CC 59.4
39.9–42.3	CC 64.3
42.4–45.7	CC 68.5
45.8–49.2	CC 74.6
49.3–52.8	CC 81.5
52.9–56.8	CC 87.7
56.9–61.2	CC 94.0
61.3–66.1	CC 103.0
66.2–71.2	CC 112.0
71.3–76.7	CC 121.0
76.8–82.9	CC 132.0
83.0–90.0	CC 143.0

Thermal Unit Table 112
(index and instructions: page 16-132 to page 16-136)

Motor FLC (A)	Thermal Unit Number
44.0–46.8	CC 64.3
46.9–50.6	CC 68.5
50.7–54.5	CC 74.6
54.6–58.4	CC 81.5
58.5–62.9	CC 87.7
63.0–67.7	CC 94.0
67.8–72.9	CC 103.0
73.0–78.1	CC 112.0
78.2–83.9	CC 121.0
84.0–91.1	CC 132.0
91.2–97.5	CC 143.0
97.6–104	CC 156.0
105–113	CC 167.0
114–133	CC 180.0

Thermal Unit Table 113
(index and instructions: page 16-132 to page 16-136)

Motor FLC (A)	Thermal Unit Number
88.2–95.1	DD 112.0
95.2–101	DD 121.0
102–111	DD 128.0
112–119	DD 140.0
120–131	DD 150.0
132–149	DD 160.0
150–170	DD 185.0
171–180	DD 220.0
181–197	DD 240.0
198–204	DD 250.0
205–213	DD 265.0
214–237	DD 280.0
238–243	DD 300.0
244–266	DD 320.0

Thermal Unit Table 114
(index and instructions: page 16-132 to page 16-136)

Motor FLC (A)	Thermal Unit Number
133–148	B 1.30
149–174	B 1.45
175–195	B 1.67
196–219	B 1.88
220–239	B 2.10
240–271	B 2.40
272–308	B 2.65
309–348	B 3.00
349–397	B 3.30
398–429	B 3.70
430–495	B 4.15
496–520	B 4.85

Thermal Unit Table 115
(index and instructions: page 16-132 to page 16-136)

Motor FLC (A)	Thermal Unit Number
176–190	DD 112.0
191–203	DD 121.0
203–223	DD 128.0
224–239	DD 140.0
240–253	DD 150.0
254–299	DD 160.0
300–341	DD 185.0
342–361	DD 220.0
362–395	DD 240.0
396–409	DD 250.0
410–427	DD 265.0
428–475	DD 289.0
476–487	DD 300.0
488–532	DD 320.0

Thermal Unit Table 116
(index and instructions: page 16-132 to page 16-136)

Motor FLC (A))	Thermal Unit Number
81.6–91.1	B 1.03
91.2–101	B 1.16
102–115	B 1.30
116–131	B 1.45
132–146	B 1.67
147–163	B 1.88
164–184	B 2.10
185–209	B 2.40
210–229	B 2.65
230–257	B 3.00
258–281	B 3.30
282–321	B 3.70
322–387	B 4.15
388–419	B 4.35
420–465	B 5.60
466–497	B 6.25
496–532	B 6.90

© 2019 Schneider Electric
All Rights Reserved
11/20/2019

Courtesy of Steven Engineering, Inc - (800) 258-9200 - sales@steveneng.com - www.stevenengineering.com

Thermal Unit Table 127
(index and instructions: page 16-132 to page 16-136)

Motor FLC (A)	Thermal Unit Number
1.12–1.27	B 0.81
1.28–1.37	B 0.92
1.38–1.55	B 1.03
1.56–1.71	B 1.16
1.72–1.95	B 1.30
1.96–2.19	B 1.45
2.20–2.43	B 1.67
2.44–2.67	B 1.88
2.68–3.07	B 2.10
3.08–3.47	B 2.40
3.48–3.79	B 2.65
3.80–4.35	B 3.00
4.36–5.07	B 3.30
5.08–5.75	B 3.70
5.76–6.45	B 4.15
6.46–6.99	B 4.85
7.00–7.71	B 5.50
7.72–8.23	B 6.25
8.24–9.41	B 6.90
9.42–10.43	B 7.70
10.44–11.07	B 8.20
11.08–12.35	B 9.10
12.36–14.05	B 10.2
14.06–15.85	B 11.5
15.86–17.23	B 12.8
17.24–18.35	B 14.0
18.36–20.1	B 15.5
20.2–22.1	B 17.5
22.2–23.7	B 19.5
23.8–27.1	B 22.0
27.2–30.7	B 25.0
30.8–34.9	B 28.0
35.0–38.9	B 32.0
39.0–44.5	B 36.0
44.6–50.3	B 40.0
50.4–54.0	B 45.0

Thermal Unit Table 128
(index and instructions: page 16-132 to page 16-136)

Motor FLC (A)	Thermal Unit Number
7.88–8.91	B 6.90
8.92–9.95	B 7.70
9.96–10.57	B 8.20
10.58–11.95	B 9.10
11.96–13.79	B 10.2
13.80–15.85	B 11.5
15.86–17.43	B 12.8
17.44–18.55	B 14.0
18.56–20.5	B 15.5
20.6–22.9	B 17.5
23.0–24.7	B 19.5
24.8–27.9	B 22.0
28.0–31.7	B 25.0
31.8–35.9	B 28.0
36.0–39.9	B 32.0
40.0–45.7	B 36.0
45.8–50.9	B 40.0
51.0–61.7	B 45.0
61.8–65.1	B 50.0
65.2–69.9	B 56.0
70.0–79.5	B 62.0
79.6–89.4	B 70.0

Thermal Unit Table 129
(index and instructions: page 16-132 to page 16-136)

Motor FLC (A)	Thermal Unit Number
28.0–29.9	CC 20.9
30.0–32.5	CC 22.8
32.6–34.5	CC 24.6
34.6–37.5	CC 26.3
37.6–40.5	CC 28.8
40.6–43.5	CC 31.0
43.6–46.7	CC 33.3
46.8–50.5	CC 36.4
50.6–54.3	CC 39.6
54.4–58.9	CC 42.7
59.0–63.3	CC 46.6
63.4–68.1	CC 50.1
68.2–73.7	CC 54.5
73.8–79.7	CC 59.4
79.8–84.7	CC 64.5
84.8–91.5	CC 68.5
91.6–98.5	CC 74.6
98.6–105.7	CC 81.5
105.8–113.7	CC 87.7
113.8–122.5	CC 94.0
122.6–132.3	CC 103.0
132.4–142.5	CC 112.0
142.6–153.5	CC 121.0
153.6–165.9	CC 132.0
166.0–180.0	CC 143.0

Thermal Unit Table 133
(index and instructions: page 16-132 to page 16-136)

Motor FLC (A)	Thermal Unit Number
4.60–5.23	B 6.90
5.24–5.86	B 7.70
5.87–6.25	B 8.20
6.26–7.09	B 9.10
7.10–8.25	B 10.2
8.26–9.49	B 11.5
9.50–10.3	B 12.8
10.4–11.2	B 14.0
11.3–12.5	B 15.5
12.6–13.8	B 17.5
13.9–15.0	B 19.5
15.1–16.9	B 22.0
17.0–19.1	B 25.0
19.2–22.0	B 28.0
22.1–24.4	B 32.0
24.5–28.0	B 36.0
28.1–31.8	B 40.0
31.9–36.0	B 45.0
36.1–38.5	B 50.0
38.6–41.2	B 56.0
41.3–44.4	B 62.0
44.5–50.3	B 70.0
50.4–56.9	B 79.0
57.0–59.0	B 88.0

Thermal Unit Table 134
(index and instructions:page 16-132 to page 16-136)

Motor FLC (A)	Thermal Unit Number
4.30–4.98	B 6.90
4.99–5.57	B 7.70
5.58–5.94	B 8.20
5.95–6.71	B 9.10
6.72–7.79	B 10.2
7.80–8.93	B 11.5
8.94–9.77	B 12.8
9.78–10.5	B 14.0
10.6–11.7	B 15.5
11.8–13.0	B 17.5
13.1–14.0	B 19.5
14.1–15.0	B 22.0
15.1–17.2	B 25.0
17.3–19.9	B 28.0
20.0–22.3	B 32.0
22.4–26.0	B 36.0
26.1–29.8	B 40.0
29.9–34.0	B 45.0
34.1–36.7	B 50.0
36.8–39.5	B 56.0
39.6–42.1	B 62.0
42.2–46.6	B 70.0
46.7–51.5	B 79.0
51.6–54.0	B 88.0

© 2019 Schneider Electric
All Rights Reserved
11/20/2019

Courtesy of Steven Engineering, Inc - (800) 258-9200 - sales@steveneng.com - www.stevenengineering.com

Thermal Unit Table 135
(index and instructions: page 16-132 to page 16-136)

Motor FLC (A)		Thermal Unit Number
1 T. U.	3 T. U.	
0.77–0.88	0.85–0.95	B 1.30
0.89–1.02	0.96–1.09	B 1.45
1.03–1.19	1.10–1.21	B 1.67
1.20–1.37	1.22–1.35	B 1.88
1.38–1.62	1.36–1.56	B 2.10
1.63–1.90	1.57–1.76	B 2.40
1.91–2.12	1.77–1.94	B 2.65
2.13–2.46	1.95–2.22	B 3.00
2.47–2.83	2.23–2.57	B 3.30
2.84–3.19	2.58–2.87	B 3.70
3.20–3.61	2.88–3.21	B 4.15
3.62–3.89	3.22–3.50	B 4.85
3.90–4.32	3.51–3.79	B 5.50
4.33–4.57	3.80–4.04	B 6.25
4.58–5.19	4.05–4.53	B 6.90
5.20–5.79	4.54–5.03	B 7.70
5.80–6.16	5.04–5.36	B 8.20
6.17–6.94	5.37–5.97	B 9.10
6.95–7.99	5.98–6.89	B 10.2
7.80–8.99	6.90–7.79	B 11.5
9.00–9.98	7.80–8.53	B 12.8
9.99–10.6	8.54–9.09	B 14.0
10.7–11.6	9.10–9.99	B 15.5
11.7–13.1	10.0–10.9	B 17.5
13.2–14.2	11.0–11.7	B 19.5
14.3–15.4	11.8–13.4	B 22.0
15.5–17.6	13.5–15.4	B 25.0
17.7–20.0	15.5–17.9	B 28.0
–	18.0–20.0	B 32.0
For Type DPSG12 & DPSG13, 20 A Starter. Select Thermal Units from above.		
20.1–22.7	18.0–20.2	B 32.0
22.8–25.0	20.3–23.2	B 36.0
–	23.3–25.0	B 40.0
For Type DPSG22 & DPSG23, 25 A Starter. Select any of the Thermal Units from above.		
22.8–26.1	–	B 36.0
26.2–29.6	23.3–25.8	B 40.0
29.7–30.0	25.9–28.6	B 45.0
For Type DPSG32 & DPSG33, 30 A Starter. Select any of the Thermal Units from above.		

Thermal Unit Table 136
(index and instructions: page 16-132 to page 16-136)

Motor FLC (A)		Thermal Unit Number
1 T. U.	3 T. U.	
0.98–1.09	0.88–0.98	B 1.30
1.10–1.24	0.99–1.13	B 1.45
1.25–1.41	1.14–1.26	B 1.67
1.42–1.59	1.27–1.38	B 1.88
1.60–1.81	1.39–1.62	B 2.10
1.82–2.04	1.63–1.82	B 2.40
2.05–2.19	1.83–2.04	B 2.65
2.20–2.52	2.05–2.36	B 3.00
2.53–2.90	2.37–2.72	B 3.30
2.91–3.29	2.73–3.07	B 3.70
3.30–3.69	3.08–3.44	B 4.15
3.70–3.99	3.45–3.69	B 4.85
4.00–4.42	3.70–4.11	B 5.50
4.43–4.69	4.12–4.34	B 6.25
4.70–5.37	4.35–4.89	B 6.90
5.38–5.94	4.90–5.44	B 7.70
5.95–6.34	5.45–5.80	B 8.20
6.35–7.05	5.81–6.47	B 9.10
7.06–8.14	6.48–7.45	B 10.2
8.15–9.39	7.46–8.49	B 11.5
9.40–10.3	8.50–9.29	B 12.8
10.4–11.1	9.30–9.99	B 14.0
11.2–12.2	10.0–10.8	B 15.5
12.3–13.5	10.9–12.1	B 17.5
13.6–14.7	12.2–13.1	B 19.5
14.8–16.1	13.2–14.6	B 22.0
16.2–18.3	14.7–16.4	B 25.0
18.4–20.0	16.5–18.9	B 28.0
–	19.0–20.0	B 32.0
For Type DPSO12 & DPSO13, 20 A Starter. Select Thermal Units from above.		
18.4–20.9	–	B 28.0
21.0–23.6	19.0–20.9	B 32.0
23.7–25.0	21.0–24.1	B 36.0
–	24.2–25.0	B 40.0
For Type DPSO22 & DPSO23, 25 A Starter. Select any of the Thermal Units from above.		
23.7–27.2	–	B 36.0
27.3–30.0	24.2–27.2	B 40.0
	27.3–30.0	B 45.0
For Type DPSO32 & DPSO33, 30 A Starter. Select any of the Thermal Units from above.		

Thermal Unit Table 145
(index and instructions: page 16-132 to page 16-136)

Motor FLC (A)		Thermal Unit Number
1 T.U.	3 T.U.	
1.00–1.11	0.91–1.02	B1.30
1.12–1.27	1.03–1.15	B1.45
1.28–1.36	1.16–1.27	B1.67
1.37–1.53	1.28–1.39	B1.88
1.54–1.78	1.40–1.61	B2.10
1.79–2.02	1.62–1.84	B2.40
2.03–2.20	1.85–2.03	B2.65
2.21–2.52	2.04–2.34	B3.00
2.53–2.94	2.35–2.69	B3.30
2.95–3.30	2.70–3.02	B3.70
3.31–3.70	3.03–3.39	B4.15
3.71–4.02	3.40–3.65	B4.85
4.03–4.46	3.66–4.04	B5.50
4.47–4.69	4.05–4.28	B6.25
4.70–5.37	4.29–4.85	B6.90
5.38–5.94	4.86–5.38	B7.70
5.95–6.34	5.39–5.71	B8.20
6.35–7.09	5.72–6.39	B9.10
7.10–8.46	6.40–7.53	B10.2
8.47–9.32	7.54–8.34	B11.5
9.33–10.2	8.35–9.14	B12.8
10.3–10.9	9.15–9.74	B14.0
11.0–12.1	9.75–10.7	B15.5
12.2–13.4	10.8–11.8	B17.5
13.5–14.2	11.9–12.2	B19.5
14.3–16.0	12.3–14.4	B22.0
16.1–18.1	14.5–16.4	B25.0
18.2–20.5	16.5–18.9	B28.0
20.6–23.5	19.0–21.3	B32.0
23.6–27.2	21.4–23.3	B36.0
27.3–30.8	23.4–27.9	B40.0
30.9–35.0	28.0–31.4	B45.0
35.1–37.2		B50.0
37.3–40.0		B56.0
For Type DPSG42 & DPSG43, 40 A Starter. Select any of the Thermal Units from above.		

Thermal Unit Table 146
(index and instructions: page 16-132 to page 16-136)

Motor FLC (A)		Thermal Unit Number
1 T.U.	3 T.U.	
3.90–4.22	3.60–3.89	B5.50
4.23–4.49	3.90–4.15	B6.25
4.50–5.14	4.16–4.76	B6.90
5.15–5.78	4.77–5.30	B7.70
5.79–6.23	5.31–5.70	B8.20
6.24–7.03	5.71–6.46	B9.10
7.04–8.23	6.47–7.65	B10.2
8.24–9.31	7.66–8.55	B11.5
9.32–10.1	8.56–9.36	B12.8
10.2–10.7	9.37–9.9	B14.0
10.8–11.9	10.0–10.9	B15.5
12.0–13.1	11.0–12.0	B17.5
13.2–13.9	12.1–12.8	B19.5
14.0–15.9	12.9–14.2	B22.0
16.0–18.0	14.3–16.0	B25.0
18.1–20.8	16.1–18.5	B28.0
20.9–23.1	18.6–21.2	B32.0
23.2–26.9	21.3–24.9	B36.0
27.0–31.4	25.0–28.0	B40.0
31.5–36.0	28.1–31.7	B45.0
36.1–38.8	31.8–34.6	B50.0
38.9–41.7	34.7–37.4	B56.0
41.8–46.3	37.5–40.0	B62.0
46.4–50.0	40.1–46.4	B70.0
—	46.5–50.0	B79.0
For Type DPSG52 & DPSG53, 50 A Starter. Select any of the Thermal Units from above.		

© 2019 Schneider Electric
All Rights Reserved
11/20/2019

Courtesy of Steven Engineering, Inc - (800) 258-9200 - sales@steveneng.com - www.stevenengineering.com

Thermal Unit Table 147
(index and instructions: page 16-132 to page 16-136)

Motor FLC (A)		Thermal Unit Number
1 T.U.	3 T.U.	
1.04–1.14 1.15–1.29 1.30–1.43 1.44–1.56	0.93–1.04 1.05–1.18 1.19–1.33 1.34–1.43	B1.30 B1.45 B1.67 B1.88
1.57–1.79 1.80–2.03 2.04–2.26 2.27–2.51	1.44–1.67 1.68–1.88 1.89–2.09 2.10–2.41	B2.10 B2.40 B2.65 B3.00
2.52–3.03 3.04–3.31 3.32–3.73 3.74–4.07	2.42–2.79 2.80–3.15 3.16–3.54 3.55–3.75	B3.30 B3.70 B4.15 B4.85
4.08–4.49 4.50–4.76 4.77–5.44 5.45–6.04	3.76–4.22 4.23–4.46 4.47–5.09 5.10–5.61	B5.50 B5.25 B6.90 B7.70
6.05–6.46 6.47–7.24 7.25–8.64 8.65–9.59	5.62–5.99 6.00–6.70 6.71–8.19 8.20–8.79	B8.20 B9.10 B10.20 B11.5
9.60–10.5 10.6–11.3 11.4–12.6 12.7–13.9	8.80–9.66 9.67–10.2 10.3–11.4 11.5–12.6	B12.8 B14.0 B15.5 B17.5
14.0–14.9 15.0–16.5 16.6–18.9 19.0–22.2	12.7–13.5 13.6–15.1 15.2–17.2 17.3–19.9	B19.5 B22.0 B25.0 B28.0
22.3–24.6 24.7–28.6 28.7–32.4 32.5–37.3	20.0–22.5 22.6–26.2 26.3–29.9	B32.0 B36.0 B40.0 B45.0
37.4–39.5 39.6–40.0		B50.0 B56.0
For Type DPSO42 & DPSO43, 40 A Starter. Select any of the Thermal Units from above.		

Thermal Unit Table 148
(index and instructions: page 16-132 to page 16-136)

Motor FLC (A)		Thermal Unit Number
1 T.U.	3 T.U.	
4.14–4.45 4.46–4.88 4.89–5.44 5.45–6.08	3.70–4.09 4.10–4.35 4.36–5.07 5.08–5.79	B5.50 B6.25 B6.90 B7.70
6.09–6.42 6.43–7.28 7.29–8.42 8.43–9.64	5.80–6.27 6.28–7.16 7.17–8.58 8.59–9.55	B8.20 B9.10 B10.2 B11.5
9.65–10.4 10.5–11.2 11.3–12.3 12.4–13.7	9.56–10.2 10.3–10.9 11.0–11.9 12.0–13.1	B12.8 B14.0 B15.5 B17.5
13.8–14.8 14.9–16.5 16.6–18.7 18.8–21.4	13.2–14.0 14.1–14.8 14.9–17.0 17.1–19.6	B19.5 B22.0 B25.0 B28.0
21.5–24.3 24.4–28.0 28.1–33.3 33.4–37.6	19.7–22.1 22.2–26.0 26.1–29.4 29.5–34.0	B32.0 B36.0 B40.0 B45.0
37.7–41.1 41.2–44.1 44.2–47.8 47.9–50.0	34.1–36.4 36.5–39.2 39.3–42.4 42.5–49.3	B50.0 B56.0 B62.0 B70.0
—	49.4–50.0	B79.0
For Type DPSO52 & DPSO53, 50 A Starter. Select any of the Thermal Units from above.		

© 2019 Schneider Electric
All Rights Reserved
11/20/2019

Courtesy of Steven Engineering, Inc - (800) 258-9200 - sales@steveneng.com - www.stevenengineering.com