HRSH090 Series

Inverter Type

Power consumption reduced by 53%*1

(Only 400 VAC type)

Intertek (UL Standard)

RoHS

Outstanding energy saving due to the triple inverter!

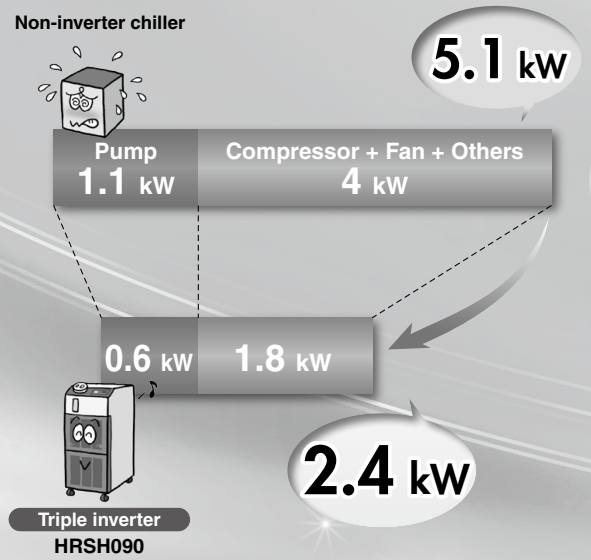

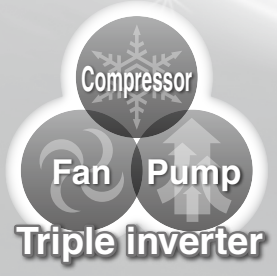

1. DC inverter compressor
2. DC inverter fan (For the air-cooled type)
3. Inverter pump

*1 Under the conditions shown on page 193

Water-cooled refrigeration | Air-cooled refrigeration

Cooling capacity 9.5 kW

Temperature stability ±0.1°C (When a load is stable)

Set temperature range 5°C to 40°C

Compact, Space saving

W 377 x H 1080 x D 970 mm

Low-noise design Operating noise Max. 66 dB

Max. ambient temperature 45°C

Indoor use

Compatible with power supplies in Europe, Asia, Oceania, and North, Central, and South America

- 3-phase 200 V
- 3-phase 400 V

Courtesy of Steven Engineering, Inc - (800) 258-9200 - sales@steveneng.com - www.stevenengineering.com

Triple inverter

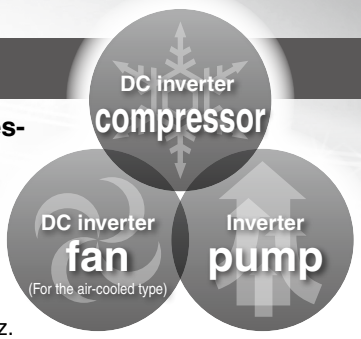

The inverter respectively controls the number of motor rotations of the compressor, fan and pump depending on the load from the user's equipment.

Power consumption **reduced by 53%**
compared with a non-inverter

With the inverter, it is possible to operate with the same performance even with the power supply of 50 Hz.

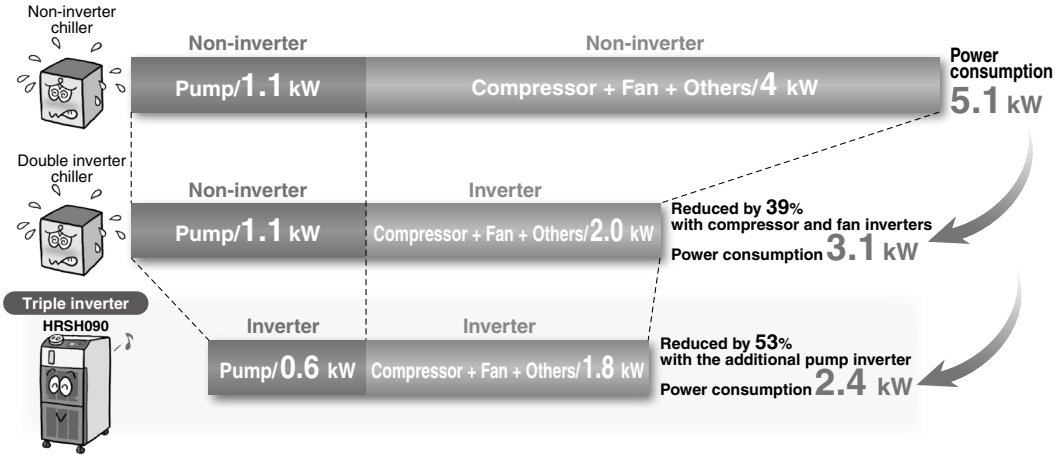

Operating ratio: Ratio of 9.5 kW (with heat load) to 0 kW (without heat load) Operating ratio: 50%, with heat load of 9.5 kW all the time

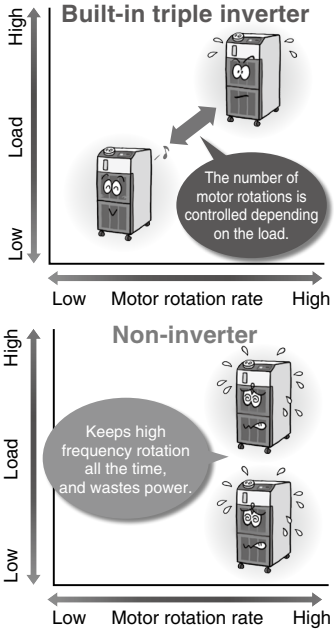

Conditions

Common conditions for non-inverter and triple inverter:
- Ambient temperature: 32°C
- Circulating fluid temperature: 20°C
- Circulating fluid flow rate: 35 L/min at 0.3 MPa (60 Hz)
- Heat load: 9.5 kW

Conditions for non-inverter chiller: Continuous operation of the compressor which can cool down 9.5 kW at 60 Hz. The pump shall be same as that of the HRSH.

Inverter pump

Power reducing effect of the inverter pump

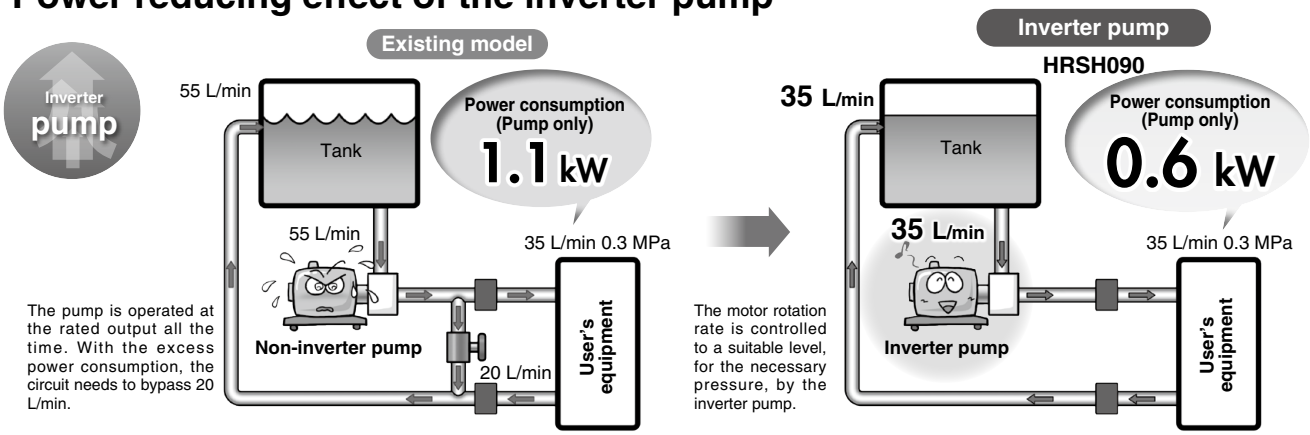

The pump is operated at the rated output all the time. With the excess power consumption, the circuit needs to bypass 20 L/min.

The motor rotation rate is controlled to a suitable level, for the necessary pressure, by the inverter pump.

Circulating fluid pressure adjustable

Discharge pressure of the circulating fluid can be set with the operation panel. The inverter pump automatically controls the discharge pressure to the set pressure without adjusting the bypass piping under various piping conditions. Power consumption can be reduced by this control.
(Operation to the set pump operating frequency is also possible.)

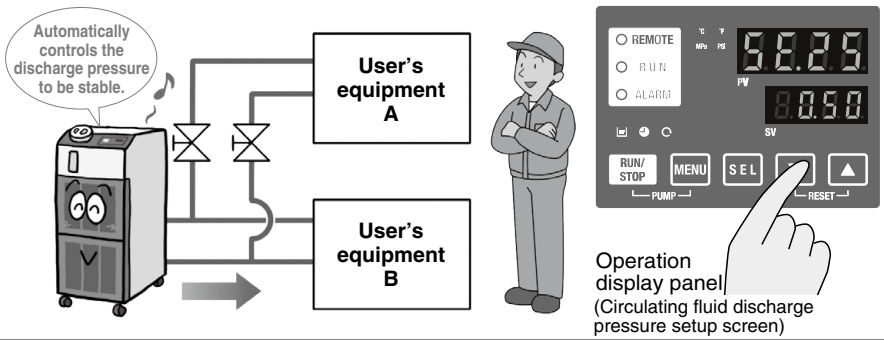

When the product is used with the flow path switched for maintenance, the pressure adjusting function controls the discharge pressure to be stable. (Secure the specified minimum flow for each branch circuit.)

Courtesy of Steven Engineering, Inc - (800) 258-9200 - sales@steveneng.com - www.stevenengineering.com

Variations

Model	Cooling method	Cooling capacity	Power supply	Option Page 210	Optional accessories Pages 211 to 214	International standards
	Air-cooled refrigeration	9.5 kW	· 3-phase 200 VAC (50 Hz), 3-phase 200 to 230 VAC (60 Hz) · 3-phase 380 to 415 VAC (50/60 Hz) 3-phase 460 to 480 VAC (60 Hz)	· With earth leakage breaker (For 400 V type as standard) · With automatic fluid fill function · Applicable to deionized water piping · Compliant with CE/UL standards · SI unit only	· Piping conversion fitting · Bypass piping set · Electric conductivity control set · Particle filter set · Filter for circulating fluid fill port · Drain pan set (With water leakage sensor) · Wired remote controller	CE (400 V as standard) (Only 200 V as an option)
	Water-cooled refrigeration	11.0 kW				

Circuit diagram

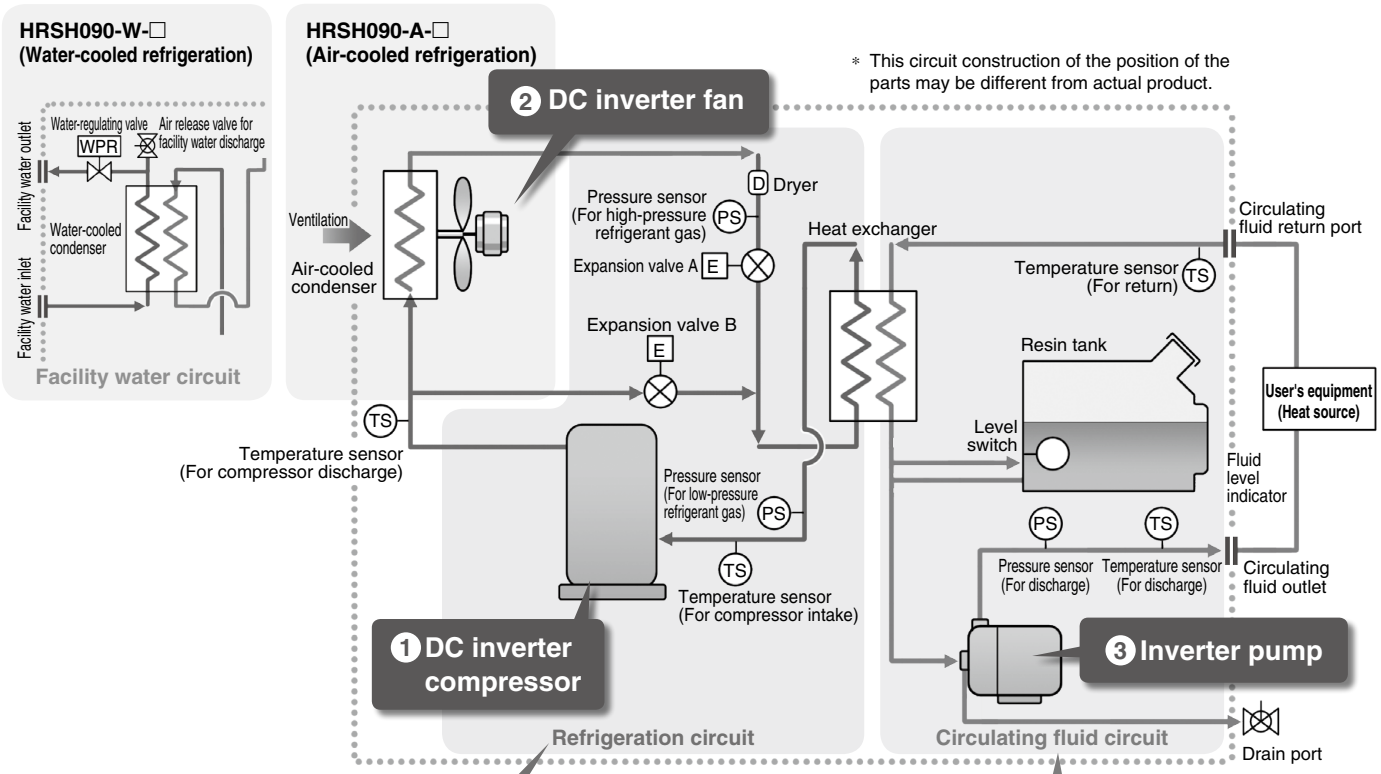

Refrigeration circuit

- The DC inverter compressor compresses the refrigerant gas and discharges high-temperature, high-pressure refrigerant gas.
- In the case of air-cooled refrigeration, the high-temperature, high-pressure refrigerant gas is cooled down by DC inverter fan ventilation in the air-cooled condenser, where it is then liquefied. In the case of water-cooled refrigeration, the refrigerant gas is cooled by the facility water in the facility water circuit in the water-cooled condenser, where it is then liquefied.
- The liquefied high-pressure refrigerant gas expands and its temperature lowers when it passes through expansion valve A, where it vaporizes after receiving heat from the circulating fluid in the evaporator.
- The vaporized refrigerant gas is sucked into the DC inverter compressor and compressed again.
- When heating the circulating fluid, the high-pressure, high-temperature refrigerant gas is bypassed into the evaporator by expansion valve B to heat the circulating fluid.

POINT

The combination of inverter control of the compressor and fan (facility water flow control by a water-regulating valve is used in water-cooled refrigeration), and the precise control of expansion valves A and B realizes energy saving operation without waste and high temperature stability.

Circulating fluid circuit

- After the circulating fluid discharged from the inverter pump is heated or cooled by the user's equipment, it returns to the tank.
- The circulating fluid is sent to the evaporator by the inverter pump, and is controlled to remain at a set temperature by the refrigeration circuit. It will then be discharged to the user's equipment side again by the thermo-chiller.

POINT

Adjusting the discharge pressure by pump inverter control eliminates wasteful discharge of the circulating fluid and realizes energy saving operation.

POINT

Since the refrigeration circuit is controlled by the signals from 2 temperature sensors (for return and discharge), precise temperature control of the circulating fluid can be achieved. Therefore, there is no need for a tank with a large capacity to absorb the circulating fluid temperature difference, as high temperature stability can be achieved even with a small-size tank. This also contributes to space saving.

Courtesy of Steven Engineering, Inc - (800) 258-9200 - sales@steveneng.com - www.stevenengineering.com

Compact and lightweight 130 kg

Reduced-height double condenser structure

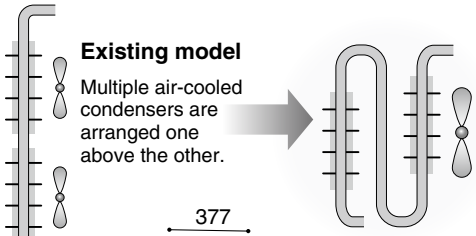

Existing model

Multiple air-cooled condensers are arranged one above the other.

A maximum reduction in the height of the product has been achieved while expanding the cooling capacity by providing overlapped air-cooled condensers.

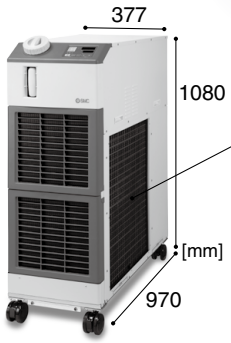

Aluminum air-cooled condenser

High heat transfer efficiency, Lightweight

Compact tank 18 L

Temperature followability control reduced the tank capacity required as a buffer.

Simple operation

Step ❶ Press the RUN/STOP key.
Step ❷ Adjust the temperature setting with the ▼/▲ keys.
Step ❸ Press the RUN/STOP key to stop operation.
Easy operation

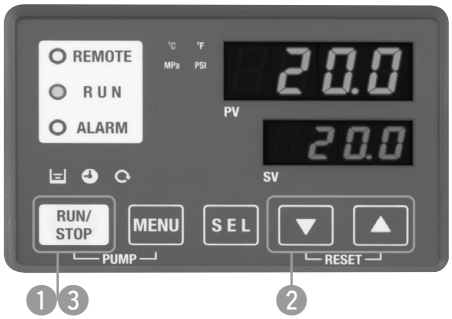

Large digital display

The large digital display (7-segment and 4 digits) and 2-row display provide a clearer view of the current value (PV) and set value (SV).

Temperature stability ±0.1°C (When a load is stable)

By controlling the DC inverter compressor, DC inverter fan, and electronic expansion valve simultaneously, it maintains the good temperature stability when the heat load fluctuates.

Conditions

- Outdoor air temperature: 32°C
- Circulating fluid temperature setting: 20°C
- Heat load in the user's equipment: 9.5 kW
- Power supply: 200 V, 60 Hz
- Circulating fluid flow: 45 L/min at 0.5 MPa
- External piping: Bypass piping + Heat load

* **For HRSH090-A-20**

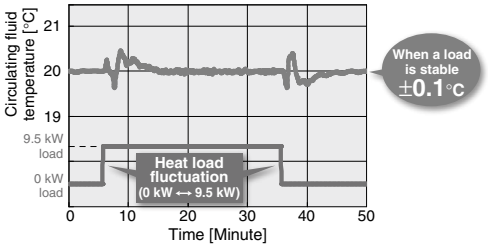

Electric conductivity control set

(With DI filter + Solenoid valve kit for control) p. 212

The electric conductivity of the circulating fluid can be set with the controller monitor arbitrarily.

Set control range: 5.0 to 45.0 μS/cm

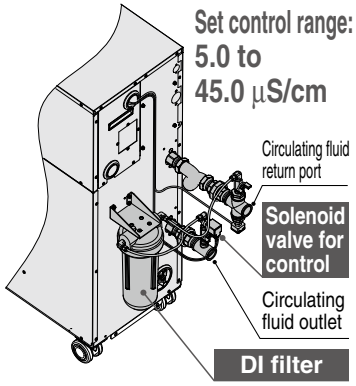

Particle filter set p. 212

Removes foreign matter in the circulating fluid

Effective in preventing foreign matter from entering the user's equipment and chiller

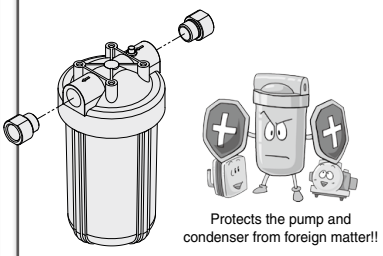

- Prevents pump malfunction
- Prevents the water-cooled condenser performance from falling

Circulating fluid can be heated without a heater.

Temperature increase with the heating function

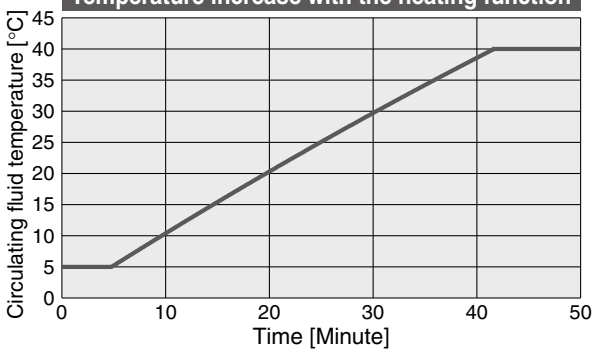

* **For HRSH090-A-20**

Conditions

- Ambient temperature: 5°C
- Power supply: 200 V, 60 Hz
- Circulating fluid flow: 45 L/min at 0.5 MPa
- External piping: Bypass piping

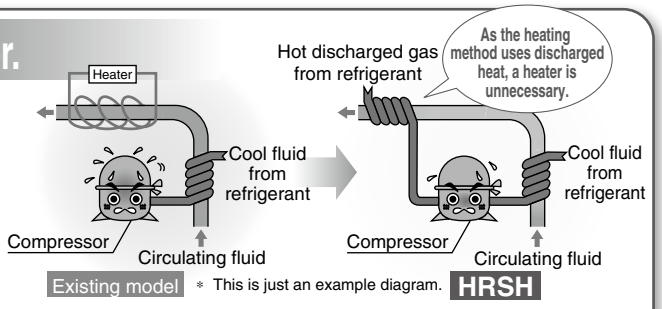

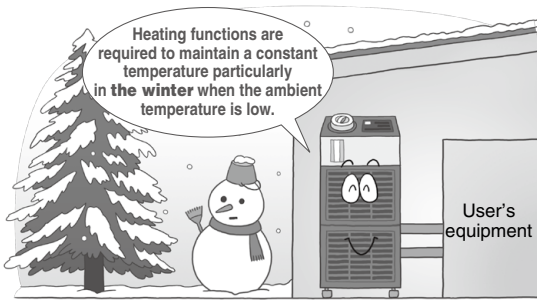

Courtesy of Steven Engineering, Inc - (800) 258-9200 - sales@steveneng.com - www.stevenengineering.com

Globally compatible power supplies CE (400 V type only)

(Europe, Asia, Oceania, Central and South America)

Transformer unnecessary

Power supply Applicable to **200 to 230 VAC**, **380 to 415 VAC**, or **460 to 480 VAC**

Transformers are unnecessary even when used overseas.

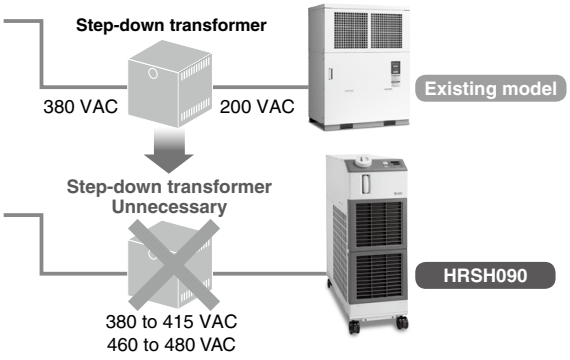

Shaped for easy supply of circulating fluid

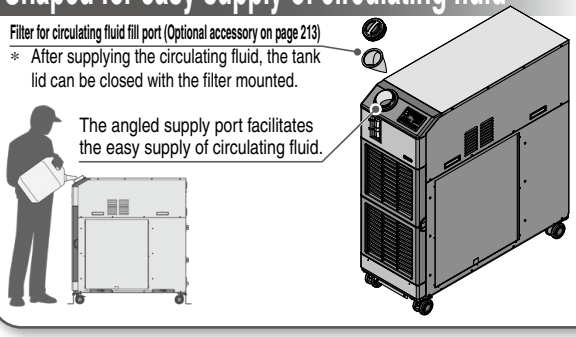

Easy cleaning of the tank

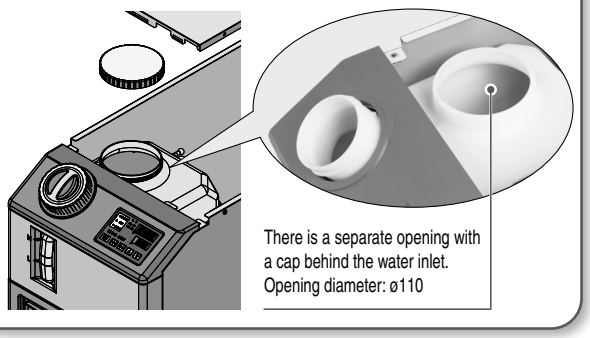

Easy to check the circulating fluid level

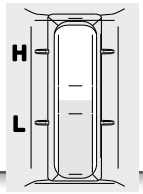

With unfixed caster

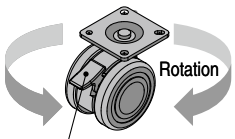

Anchor bolt fixing bracket

* Remove bracket when moving, using casters.

Toolless inspection and cleaning of air-cooled condenser

* For air-cooled refrigeration

Dustproof filter

* It can be removed with no tools.

Easy to remove dust, cutting chips, etc., stuck to the dustproof net with a brush or air blow

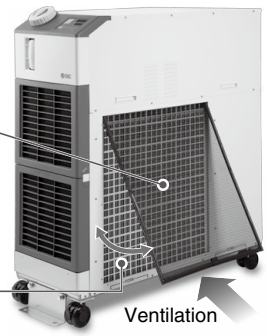

Power supply (24 VDC) available

Power can be supplied from the terminal block on the rear side to external switches, etc.

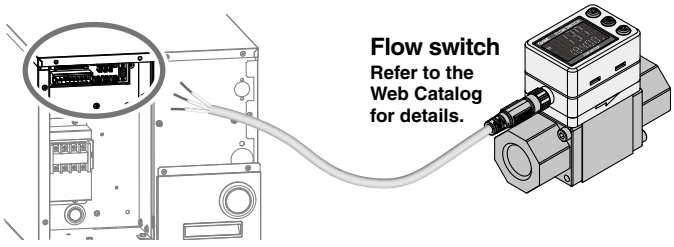

Wired remote controller

(Optional accessory on page 214)

Operable from a distance

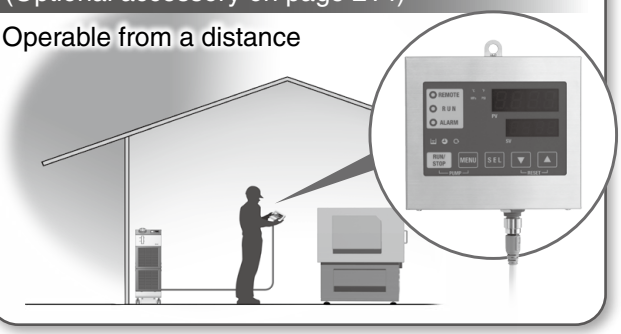

Courtesy of Steven Engineering, Inc - (800) 258-9200 - sales@steveneng.com - www.stevenengineering.com

Convenient functions (Refer to the Operation Manual for details.)

Timer operation function
Timer for ON and OFF can be set in units of 0.5 h up to 99.5 h.

Ex.) Can be set to stop on Saturday and Sunday and restart on Monday morning

Ex. SE.02 "ON timer"

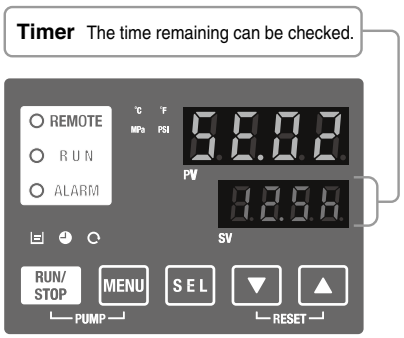

Unit conversion function
Temperature and pressure units can be changed.

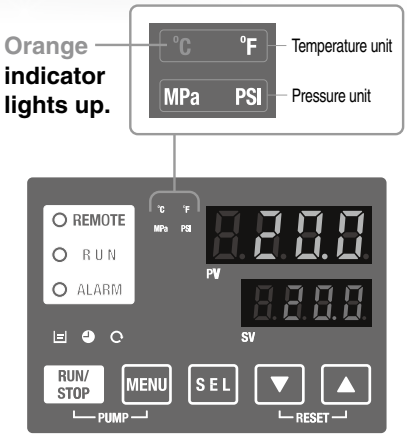

Power failure auto-restart function
Automatic restart after stoppage due to power failure, etc., is possible without pressing the RUN/STOP key, and remote operation is also possible.

Anti-freezing operation function
If the circulating fluid approaches its freezing point, for example, on a cold winter night, the pump operates automatically, and the heat generated by the pump warms the circulating fluid, preventing freezing.

Key-lock function
Can be set in advance to protect the set values from being changed by pressing keys by mistake.

Function to output a signal for completion of preparation
Notifies by communication when the temperature reaches the pre-set temperature range

Independent operation of the pump
The pump can be operated independently while the chiller is powered off. This allows you to check for leakages in piping and to remove the air.

Self-diagnosis function and check display

Display of individual alarm codes
For details, refer to page 208.

Operation is monitored at all times by the integrated sensor.
Should any error occur, the self-diagnosis result is displayed by the applicable alarm code.
This makes it easier to identify the cause of the alarm.
Can be used before requesting service

Changeable alarm set values

Setting item	Set value
Circulating fluid discharge temperature rise	5 to 55°C
Circulating fluid discharge temperature drop	1 to 39°C
Circulating fluid discharge pressure rise	0.05 to 0.6 MPa
Circulating fluid discharge pressure drop	0.05 to 0.6 MPa

Ex. AL01 "Low level in tank"

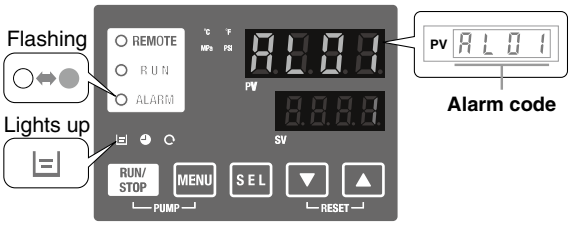

Alarm codes can be used for the notification of upcoming recommended maintenance.
The codes notify you when it's time to check the pump and fan motor. Helpful for facility maintenance

∗ A fan motor is not used in water-cooled refrigeration.

Ex. AL28 "Pump maintenance"

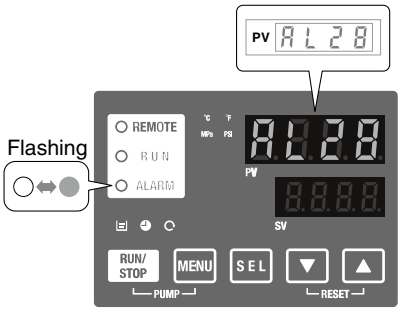

Check display
The internal temperature, pressure, and operating time of the product are displayed.

Ex. drv. "Accumulated operating time"

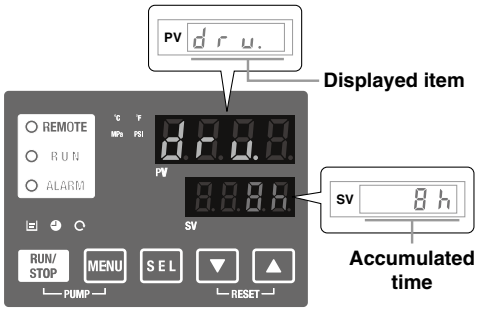

Displayed item
Circulating fluid outlet temperature
Circulating fluid return temperature
Circulating fluid flow rate∗1
Compressor gas temperature
Circulating fluid outlet pressure
Compressor gas discharge pressure
Compressor gas return pressure
Accumulated operating time
Accumulated operating time of pump
Accumulated operating time of fan∗2
Accumulated operating time of compressor
Accumulated operation time of dustproof filter∗2

∗1 This is not measurement value. Use it for reference.
∗2 These are displayed only for air-cooled refrigeration.

SMC
Courtesy of Steven Engineering, Inc - (800) 258-9200 - sales@steveneng.com - www.stevenengineering.com

Communication function

Serial communication (RS232C/RS485) and contact I/Os (2 inputs and 3 outputs) are equipped as standard.
This allows for communication with the user's equipment and system construction, depending on the application.
A 24 VDC output can be also provided and is available for use with flow switches (SMC's PF2W, etc.).

Ex. 1 Remote signal I/O through serial communication

Remote operation is enabled (to start and stop operation) through serial communication.

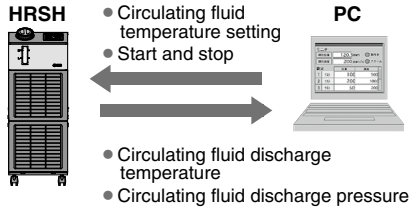

- Circulating fluid temperature setting
- Start and stop

- Circulating fluid discharge temperature
- Circulating fluid discharge pressure
- Run and stop status
- Alarm information
- Various setting information
- Preparation completion status

Ex. 2 Remote operation signal input

One of the contact inputs is used for remote operation and the other is used to monitor the flow of a flow switch. This is where their alarm outputs are taken in.

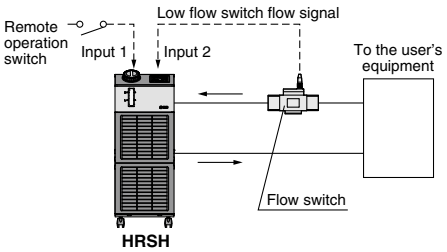

Power for flow switches (24 VDC) can be supplied by the thermo-chiller.

Ex. 3 Alarm and operation status (start, stop, etc.) signal output

The alarm and status generated in the product are assigned to 3 output signals based on their contents, which can then be output.

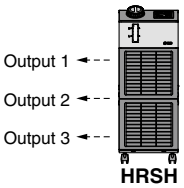

· Output setting example
Output 1: Temperature rise
Output 2: Pressure rise
Output 3: Operation status (start, stop, etc.)

Applications

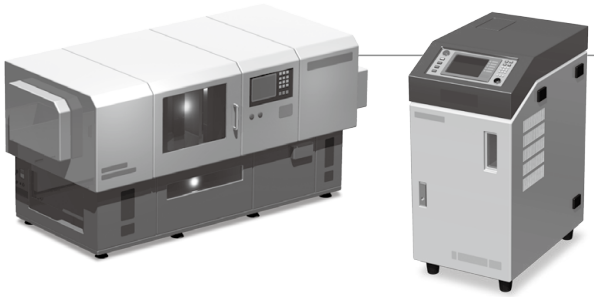

Laser beam machine/Laser welding machine

Cooling of the laser oscillation part and power source

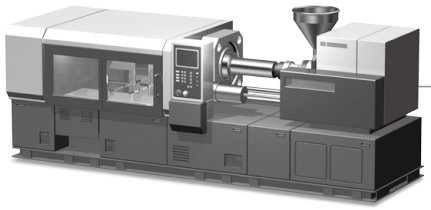

Injection molding

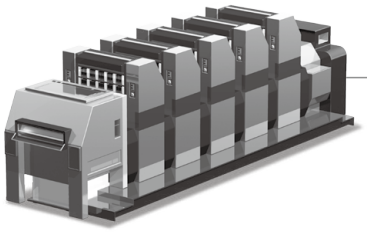

Printing machine

Temperature control of the roller

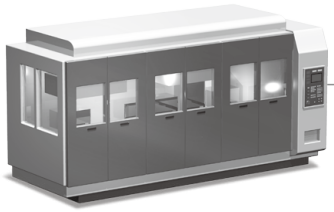

Cleaning machine

Temperature control of cleaning solution

Arc welding machine

Cooling of the power source

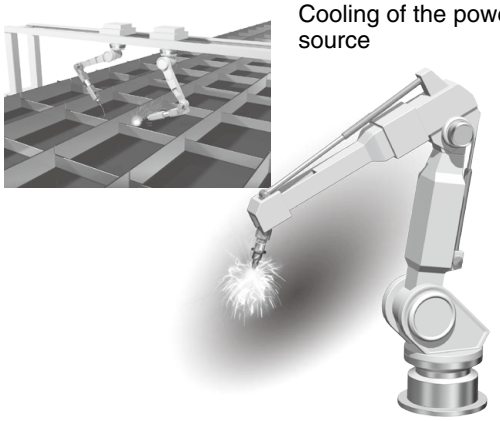

Resistance welding machine (Spot welding)

Cooling of the welding head electrodes, transformers and transistors (thyristors)

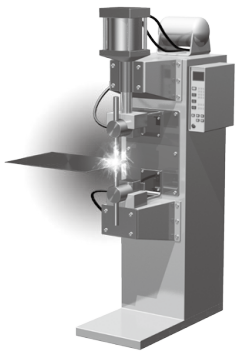

High-frequency induction heating equipment

Cooling of the heating coils, high-frequency power source and around inverters

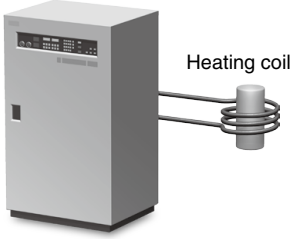

Courtesy of Steven Engineering, Inc - (800) 258-9200 - sales@steveneng.com - www.stevenengineering.com

Global Supply Network

SMC has a comprehensive network in the global market.

We now have a presence of more than 560 branch offices and distributors in 83 countries and regions worldwide, such as Asia, Oceania, North/Central/South America, and Europe. With this global network, we are able to provide a global supply of our substantial range of products and high-quality customer service. We also provide full support to local factories, foreign manufacturing companies, and Japanese companies in each country.

SMC Thermo-chiller Variations

Lots of variations are available according to the users' requirements.

Series	Temperature stability [°C]	Set temperature range [°C]	Cooling capacity [kW]												Environment	International standards
			1.2	1.8	2.4	3	5	6	9	10	15	20	25	28		
HRSE Basic type	±2.0	10 to 30	●	●	●										Indoor use	CE (Only 230 VAC type)
HRS Standard type	±0.1	5 to 40	●	●	●	●	●	●							Indoor use	CE (MET) (Only 60 Hz)
HRS090 Standard type	±0.5	5 to 35							●						Indoor use	CE (400 V as standard)
HRS100/150 Standard type	±1.0	5 to 35								●	●				Outdoor installation IPX4	CE (400 V as standard)
HRSH090 Inverter type	±0.1	5 to 40							●						Indoor use	CE (400 V as standard, 200 V as an option) (ETL) (Only 200 V as an option)
HRSH Inverter type	±0.1	5 to 35								●	●	●	●	●	Outdoor installation IPX4	CE (400 V as standard, 200 V as an option) (MET) (Only 200 V as an option)

Courtesy of Steven Engineering, Inc - (800) 258-9200 - sales@steveneng.com - www.stevenengineering.com

Circulating Fluid/Facility Water Line Equipment

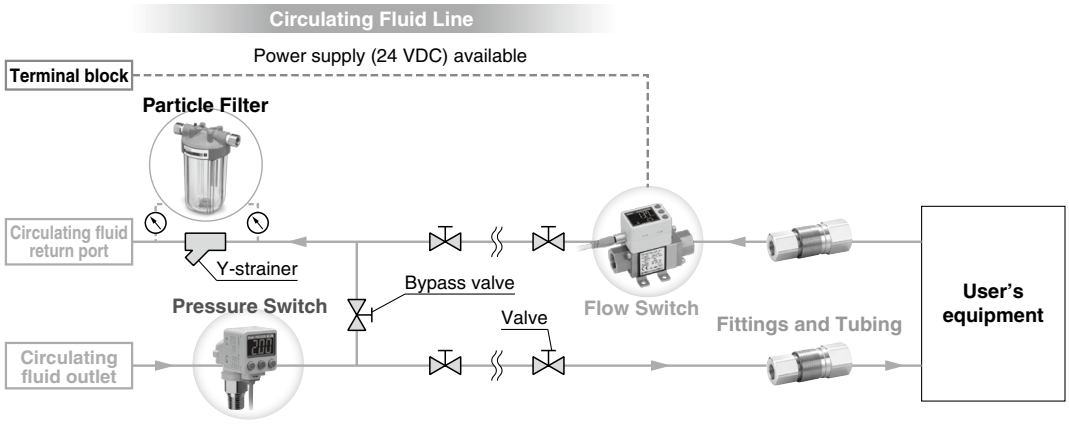

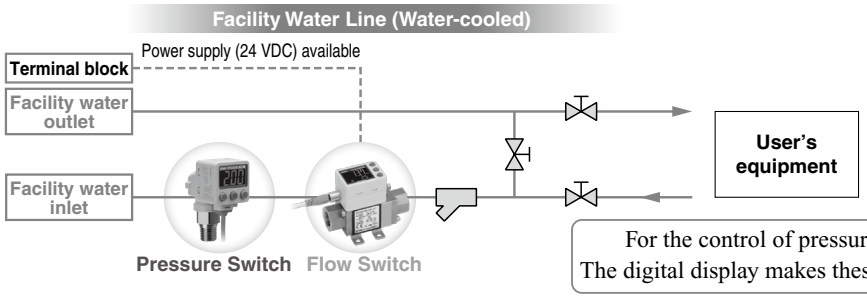

For the control of pressure and flow rate:
The digital display makes these aspects **visible**.

Flow Switch: Monitors the flow rate and temperature of the circulating fluid

Refer to the **Web Catalog** for details.

3-Color Display Digital Flow Switch for Water *PF3W*

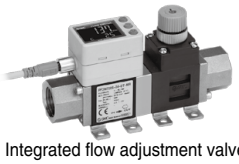

Integrated flow adjustment valve and temperature sensor

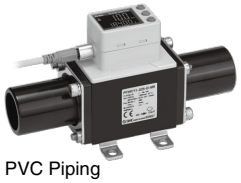

PVC Piping

3-Color Display Electromagnetic Type Digital Flow Switch *LFE*

Digital Flow Switch for Deionized Water and Chemical Liquids *PF2D*
4-Channel Flow Monitor *PF2□200*

Pressure Switch: Monitors the pressure of the circulating fluid

Refer to the **Web Catalog** for details.

2-Color Display High-Precision Digital Pressure Switch *ISE80*

Pressure Sensor for General Fluids *PSE56□*
Pressure Sensor Controller *PSE200,300*

Particle Filter

p. 212

Fittings and Tubing

Refer to the **Web Catalog** for details.

S Coupler *KK*

S Coupler/Stainless Steel (Stainless Steel 304) *KKA*

Tubing *T□*

Series	Material
T	Nylon
TU	Polyurethane
TH	FEP (Fluoropolymer)
TD	Modified PTFE (Soft fluoropolymer)
TL	Super PFA
TLM	PFA

Metal One-touch Fittings *KQB2*

Stainless Steel 316 One-touch Fittings *KQG2*

Stainless Steel 316 Insert Fittings *KFG2*

Fluoropolymer Fittings *LQ*

Courtesy of Steven Engineering, Inc - (800) 258-9200 - sales@steveneng.com - www.stevenengineering.com

CONTENTS

HRSH090 Series Inverter Type

Thermo-chiller HRSH090 Series

How to Order/Specifications
- Air-cooled 200 V/400 V ..... Page 203
- Water-cooled 200 V/400 V ..... Page 204

Cooling Capacity ..... Page 205
Pump Capacity ..... Page 205
Dimensions ..... Page 206
Recommended External Piping Flow ..... Page 207
Cable Specifications ..... Page 207
Operation Display Panel ..... Page 208
List of Function ..... Page 208
Alarm ..... Page 208
Communication Functions ..... Page 209

Options

With Earth Leakage Breaker ..... Page 210
With Automatic Fluid Fill Function ..... Page 210
Applicable to Deionized Water Piping ..... Page 210
Compliant with CE/UL Standards ..... Page 210
SI Unit Only ..... Page 210

Optional Accessories

① Piping Conversion Fitting ..... Page 211
② Bypass Piping Set ..... Page 211
③ Electric Conductivity Control Set ..... Page 212
④ Particle Filter Set ..... Page 212
⑤ Filter for Circulating Fluid Fill Port ..... Page 213
⑥ Drain Pan Set (With Water Leakage Sensor) ..... Page 213
⑦ Wired Remote Controller ..... Page 214

Cooling Capacity Calculation

Required Cooling Capacity Calculation ..... Page 215
Precautions on Cooling Capacity Calculation ..... Page 216
Circulating Fluid Typical Physical Property Values ..... Page 216

Specific Product Precautions ..... Page 217

Courtesy of Steven Engineering, Inc - (800) 258-9200 - sales@steveneng.com - www.stevenengineering.com

Thermo-chiller Inverter Type
Air-cooled 200 V/400 V Type
HRSH090 Series

(400 V type only)

Intertek (UL Standards)

RoHS

How to Order

HRSH 090 – A □ – 20 – □

Cooling capacity

090	9.5 kW

Cooling method

A	Air-cooled refrigeration

Pipe thread type

Nil	Rc
F	G (with Rc-G conversion fitting)
N	NPT (with Rc-NPT conversion fitting)

Power supply

20	3-phase 200 VAC (50 Hz) 3-phase 200 to 230 VAC (60 Hz)
40	3-phase 380 to 415 VAC (50/60 Hz) 3-phase 460 to 480 VAC (60 Hz)

Option

Nil	None
B*1	With earth leakage breaker
J	With automatic fluid fill function
M	Applicable to deionized water piping
S*2	Compliant with CE/UL Standards
W	SI unit only

- When multiple options are combined, indicate symbols in alphabetical order.

*1 200 V type only.
400 V type is provided with an earth leakage breaker as standard.

*2 200 V type only. 400 V type is CE-compliant as standard.
Additionally, combination with option B is not necessary.
An earth leakage breaker is equipped as standard.

Specifications

Model				HRSH090-A□-20-□	HRSH090-A□-40-□
Cooling method				Air-cooled refrigeration	
Refrigerant				R410A (HFC) (GWP1975)	
Refrigerant charge			kg	1.32	
Control method				PID control	
Ambient temperature/Humidity/Altitude*1, 9			°C/%	Temperature: 5 to 45°C, Humidity: 30 to 70%, Altitude: less than 3000 m	
Circulating fluid system	Circulating fluid*2			Tap water, 15% Ethylene glycol aqueous solution, Deionized water	
	Set temperature range*1		°C	5 to 40	
	Cooling capacity*3, 9		kW	9.5	
	Heating capacity*4		kW	2.5	
	Temperature stability*5		°C	±0.1	
	Pump capacity	Rated flow (Outlet)	L/min	45 (0.5 MPa)	
		Maximum flow rate	L/min	60	
		Maximum pump head	m	50	
	Settable pressure range*6		MPa	0.1 to 0.5	
	Minimum operating flow rate*7		L/min	20	
	Tank capacity		L	18	
	Circulating fluid outlet, circulating fluid return port			Rc1 (Symbol F: G1, Symbol N: NPT1)	
	Tank drain port			Rc1/4 (Symbol F: G1/4, Symbol N: NPT1/4)	
	Fluid contact material			Stainless steel, Copper (Heat exchanger brazing), Brass, Bronze, Carbon, Ceramic, PE, PVC, POM, PTFE, NBR, EPDM, FKM, PP	
Electrical system	Power supply			3-phase 200 VAC (50 Hz), 3-phase 200 to 230 VAC (60 Hz) Allowable voltage range ±10% (No continuous voltage fluctuation)	3-phase 380 to 415 VAC (50/60 Hz) Allowable voltage range ±10% (No continuous voltage fluctuation) 3-phase 460 to 480 VAC (60 Hz) Allowable voltage range +4%, –10% (Max. voltage less than 500 V and no continuous voltage fluctuation)
	Applicable earth leakage breaker*8	Rated current	A	30	20
		Sensitivity of leak current	mA	30	
	Rated operating current*5		A	15	8
	Rated power consumption*5		kW (kVA)	4.6 (5.2)	5.0 (5.6)
Noise level (Front 1 m/Height 1 m)*5			dB (A)	66	
Accessories				Alarm code list stickers 2 pcs. (English 1 pc./Japanese 1 pc.), Operation Manual (for installation/operation) 2 pcs. (English 1 pc./Japanese 1 pc.), Y-strainer (40 meshes) 25A, Barrel nipple 25A, Anchor bolt fixing brackets 2 pcs. (including 4 M10 bolts)*10	
Weight (dry state)			kg	Approx. 130	

*1 Use a 15% ethylene glycol aqueous solution if operating in a place where the ambient temperature and/or circulating fluid temperature is 10°C or less.
*2 Use fluid in condition below as the circulating fluid.
Tap water: Standard of The Japan Refrigeration And Air Conditioning Industry Association (JRA GL-02-1994)
15% ethylene glycol aqueous solution: diluted by tap water in condition above without any additives such as antiseptics.
Deionized water: Electric conductivity 1 μS/cm or higher (Electric resistivity 1 MΩ·cm or lower)
*3 ① Ambient temperature: 32°C, ② Circulating fluid: Tap water, ③ Circulating fluid temperature: 20°C, ④ Circulating fluid flow rate: Rated flow, ⑤ Power supply: 200/400 VAC
*4 ① Ambient temperature: 32°C, ② Circulating fluid: Tap water, ③ Circulating fluid flow rate: Rated flow, ④ Power supply: 200/400 VAC
*5 ① Ambient temperature: 32°C, ② Circulating fluid: Tap water, ③ Circulating fluid temperature: 20°C, ④ Load: Same as the cooling capacity, ⑤ Circulating fluid flow rate: Rated flow, ⑥ Power supply: 200/400 VAC, ⑦ Piping length: Shortest
*6 With the pressure control mode by inverter. When the pressure control mode is not used, the pump power frequency set mode can be used.
*7 Fluid flow rate to maintain the cooling capacity. If the actual flow rate is lower than this, install a bypass piping.
*8 To be prepared by the user. A specified earth leakage breaker is installed for option B [With earth leakage breaker], option S [Compliant with CE/UL Standards] and 400 V type.
*9 If the product is used at an altitude of 1000 m or higher, refer to "Operating Environment/Storage Environment" (page 217) Item 14 "For altitudes of 1000 m or higher."
*10 The anchor bolt fixing brackets (including 4 M10 bolts) are used for fixing to wooden skids when packaging the thermo-chiller. No anchor bolt is included.

SMC

Courtesy of Steven Engineering, Inc - (800) 258-9200 - sales@steveneng.com - www.stevenengineering.com

Thermo-chiller Inverter Type
Water-cooled 200 V/400 V Type
HRSH090 Series

(400 V type only)

Intertek (UL Standards)

RoHS

How to Order

HRSH 090 – W □ – 20 – □

Cooling capacity

090	11.0 kW

Cooling method

W	Water-cooled refrigeration

Pipe thread type

Nil	Rc
F	G (with Rc-G conversion fitting)
N	NPT (with Rc-NPT conversion fitting)

Power supply

20	3-phase 200 VAC (50 Hz) 3-phase 200 to 230 VAC (60 Hz)
40	3-phase 380 to 415 VAC (50/60 Hz) 3-phase 460 to 480 VAC (60 Hz)

Option

Nil	None
B*1	With earth leakage breaker
J	With automatic fluid fill function
M	Applicable to deionized water piping
S*2	Compliant with CE/UL Standards
W	SI unit only

- When multiple options are combined, indicate symbols in alphabetical order.

*1 200 V type only.
400 V type is provided with an earth leakage breaker as standard.
*2 200 V type only. 400 V type is CE-compliant as standard. Additionally, combination with option B is not necessary. An earth leakage breaker is equipped as standard.

Specifications

Model				HRSH090-W□-20-□	HRSH090-W□-40-□
Cooling method				Water-cooled refrigeration	
Refrigerant				R410A (HFC) (GWP1975)	
Refrigerant charge			kg	1.4	
Control method				PID control	
Ambient temperature/Humidity/Altitude*1			°C/%	Temperature: 5 to 45°C, Humidity: 30 to 70%, Altitude: less than 3000 m	
Circulating fluid system	Circulating fluid*2			Tap water, 15% Ethylene glycol aqueous solution, Deionized water	
	Set temperature range*1		°C	5 to 40	
	Cooling capacity*3		kW	11.0	
	Heating capacity*4		kW	2.5	
	Temperature stability*5		°C	±0.1	
	Pump capacity	Rated flow (Outlet)	L/min	45 (0.5 MPa)	
		Maximum flow rate	L/min	60	
		Maximum pump head	m	50	
	Settable pressure range*6		MPa	0.1 to 0.5	
	Minimum operating flow rate*7		L/min	20	
	Tank capacity		L	18	
	Circulating fluid outlet, circulating fluid return port			Rc1 (Symbol F: G1, Symbol N: NPT1)	
	Tank drain port			Rc1/4 (Symbol F: G1/4, Symbol N: NPT1/4)	
	Fluid contact material			Stainless steel, Copper (Heat exchanger brazing), Brass, Bronze, Carbon, Ceramic, PE, PVC, POM, PTFE, NBR, EPDM, FKM, PP	
Facility water system	Temperature range		°C	5 to 40	
	Pressure range		MPa	0.3 to 0.5	
	Required flow		L/min	25	
	Facility water pressure differential		MPa	0.3 or more	
	Facility water inlet/outlet			Rc1/2	
	Fluid contact material			Stainless steel, Copper (Heat exchanger brazing), Bronze, Brass, PTFE, NBR, EPDM	
Electrical system	Power supply			3-phase 200 VAC (50 Hz), 3-phase 200 to 230 VAC (60 Hz) Allowable voltage range ±10% (No continuous voltage fluctuation)	3-phase 380 to 415 VAC (50/60 Hz) Allowable voltage range ±10% (No continuous voltage fluctuation) 3-phase 460 to 480 VAC (60 Hz) Allowable voltage range +4%, –10% (Max. voltage less than 500 V and no continuous voltage fluctuation)
	Applicable earth leakage breaker*8	Rated current	A	30	20
		Sensitivity of leak current	mA	30	
	Rated operating current*5		A	12	6.8
	Rated power consumption*5		kW (kVA)	3.8 (4.0)	4.0 (4.7)
Noise level (Front 1 m/Height 1 m)*5			dB (A)	65	
Accessories				Alarm code list stickers 2 pcs. (English 1 pc./Japanese 1 pc.), Operation Manual (for installation/operation) 2 pcs. (English 1 pc./Japanese 1 pc.), Y-strainer (40 meshes) 25A, Barrel nipple 25A, Anchor bolt fixing brackets 2 pcs. (including 4 M10 bolts)*9	
Weight (dry state)			kg	Approx. 121	

*1 Use a 15% ethylene glycol aqueous solution if operating in a place where the ambient temperature and/or circulating fluid temperature is 10°C or less.
*2 Use fluid in condition below as the circulating fluid.
Tap water: Standard of The Japan Refrigeration And Air Conditioning Industry Association (JRA GL-02-1994)
15% ethylene glycol aqueous solution: diluted by tap water in condition above without any additives such as antiseptics.
Deionized water: Electric conductivity 1 μS/cm or higher (Electric resistivity 1 MΩ·cm or lower)
*3 ① Facility water temperature: 32°C, ② Circulating fluid: Tap water, ③ Circulating fluid temperature: 20°C, ④ Circulating fluid flow rate: Rated flow, ⑤ Power supply: 200/400 VAC
*4 ① Facility water temperature: 32°C, ② Circulating fluid: Tap water, ③ Circulating fluid flow rate: Rated flow, ④ Power supply: 200/400 VAC
*5 ① Facility water temperature: 32°C, ② Circulating fluid: Tap water, ③ Circulating fluid temperature: 20°C, ④ Load: Same as the cooling capacity, ⑤ Circulating fluid flow rate: Rated flow, ⑥ Power supply: 200/400 VAC, ⑦ Piping length: Shortest
*6 With the pressure control mode by inverter. When the pressure control mode is not used, the pump power frequency set mode can be used.
*7 Fluid flow rate to maintain the cooling capacity. If the actual flow rate is lower than this, install a bypass piping.
*8 To be prepared by the user. A specified earth leakage breaker is installed for option B [With earth leakage breaker], option S [Compliant with CE/UL Standards] and 400 V type.
*9 The anchor bolt fixing brackets (including 4 M10 bolts) are used for fixing to wooden skids when packaging the thermo-chiller. No anchor bolt is included.

Courtesy of Steven Engineering, Inc - (800) 258-9200 - sales@steveneng.com - www.stevenengineering.com

Cooling Capacity

∗ If the product is used at an altitude of 1000 m or higher, refer to "Operating Environment/ Storage Environment" (page 217) Item 14 "For altitudes of 1000 m or higher."

HRSH090-A□-20-□

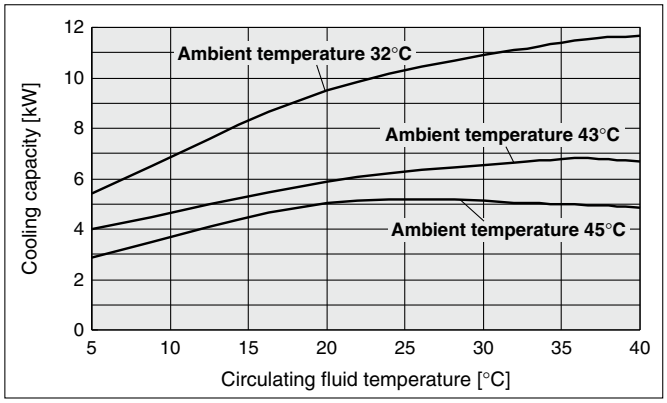

HRSH090-A□-40-□

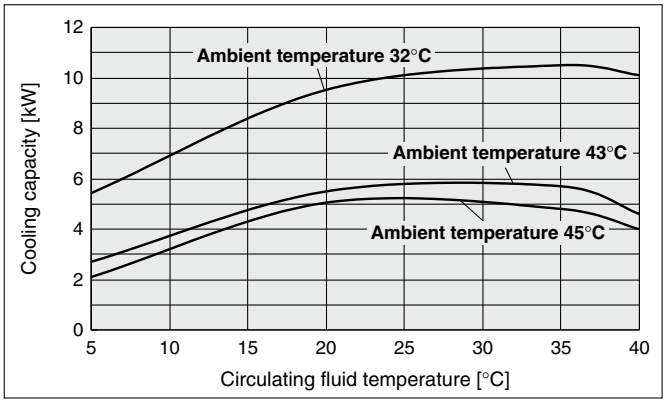

HRSH090-W□-20/40-□

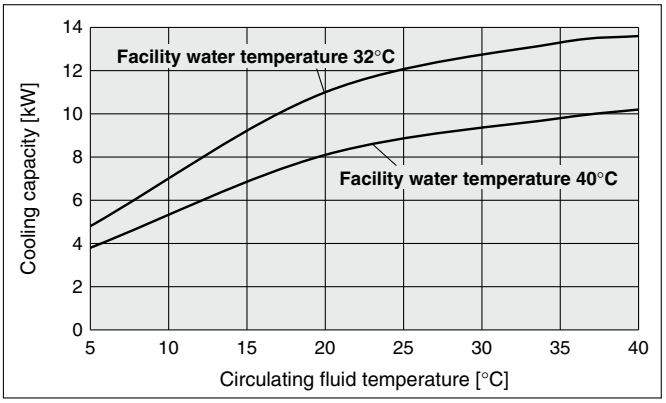

Pump Capacity

HRSH090-□□-20/40-□

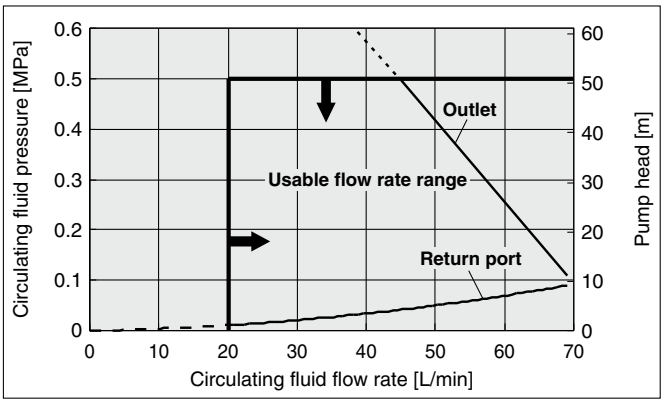

⚠ Caution

Mechanical Seal Pump

The pump used for the thermo-chiller HRSH090 series uses a mechanical seal with the fixed ring and rotary ring used for the shaft seal part. If foreign matter enter the gap between the seals, this may cause a trouble such as leakage from the seal part or pump lock. Therefore, it is strongly recommended to install the particle filter in the return piping of the chiller.

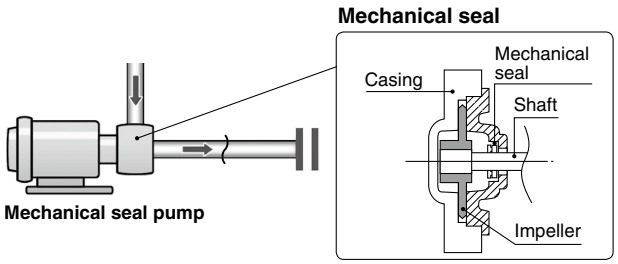

SMC
Courtesy of Steven Engineering, Inc - (800) 258-9200 - sales@steveneng.com - www.stevenengineering.com

Dimensions

HRSH090-□-20/40

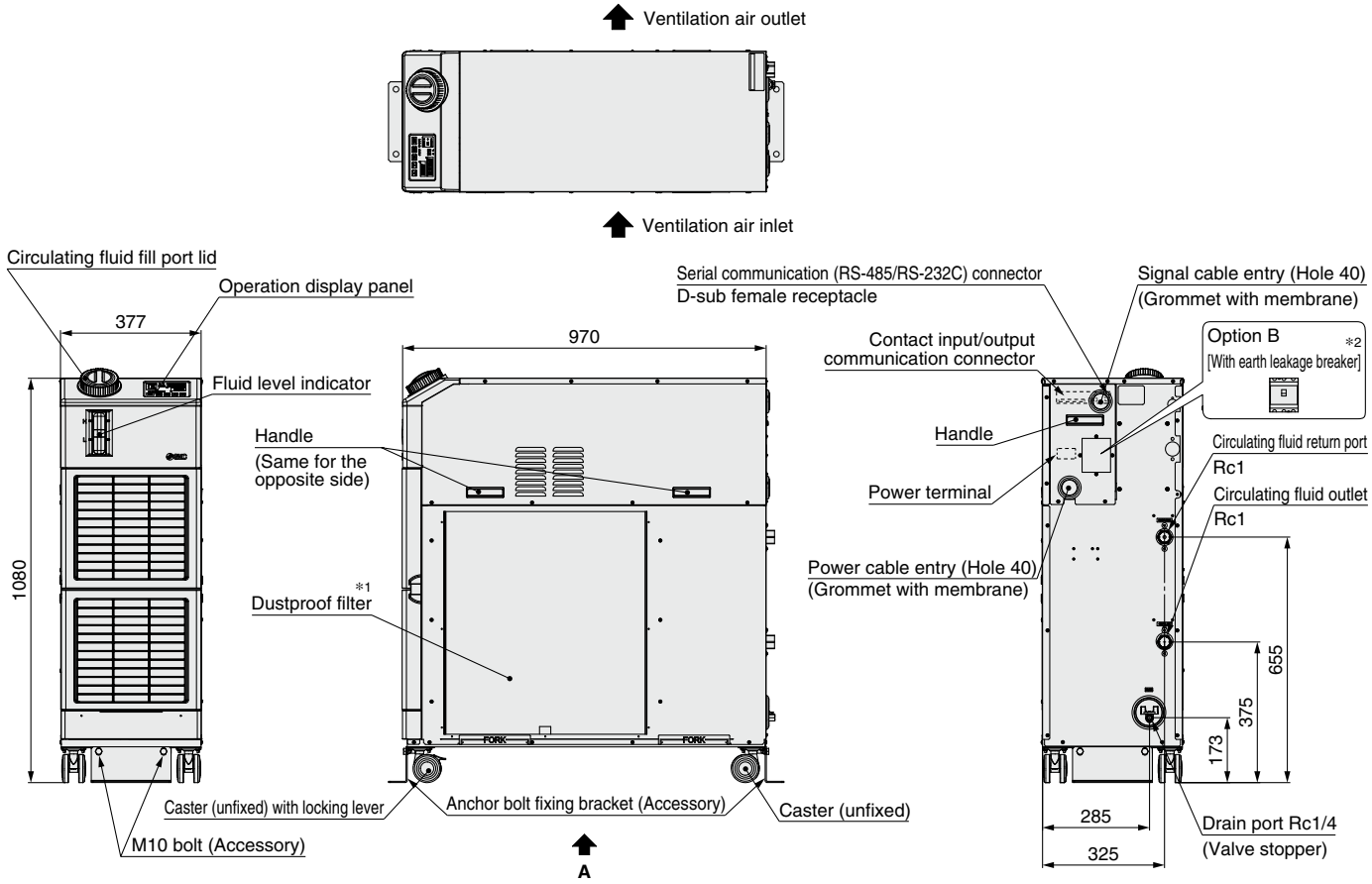

*1 The water-cooled type is not equipped with a dustproof filter.
*2 400 V type is provided with an earth leakage breaker "-B" as standard.

Anchor bolt fixing position

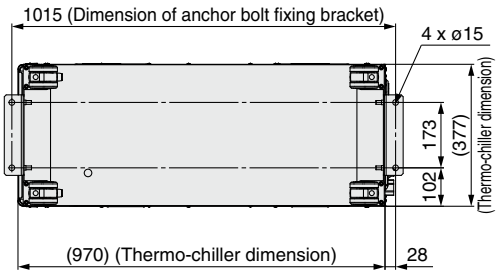

View A

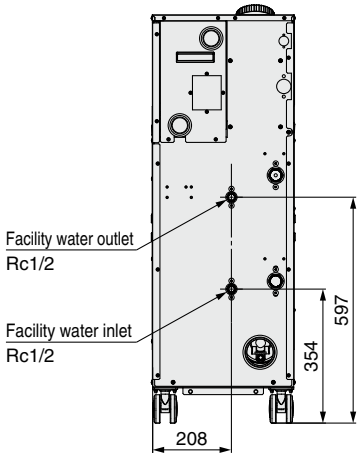

For water-cooled type

Accessory: Y-strainer mounting view

* Mount it by yourself on the circulating fluid return port.

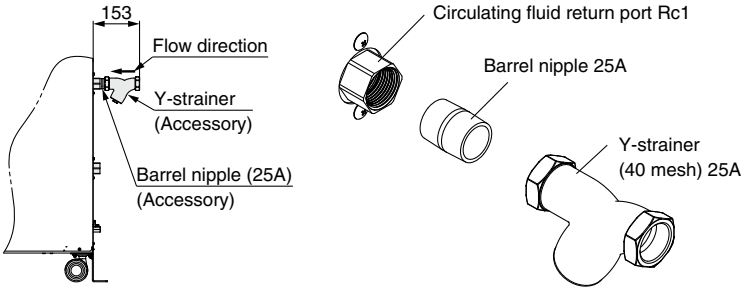

Courtesy of Steven Engineering, Inc - (800) 258-9200 - sales@steveneng.com - www.stevenengineering.com

Recommended External Piping Flow

External piping circuit is recommended as shown below.

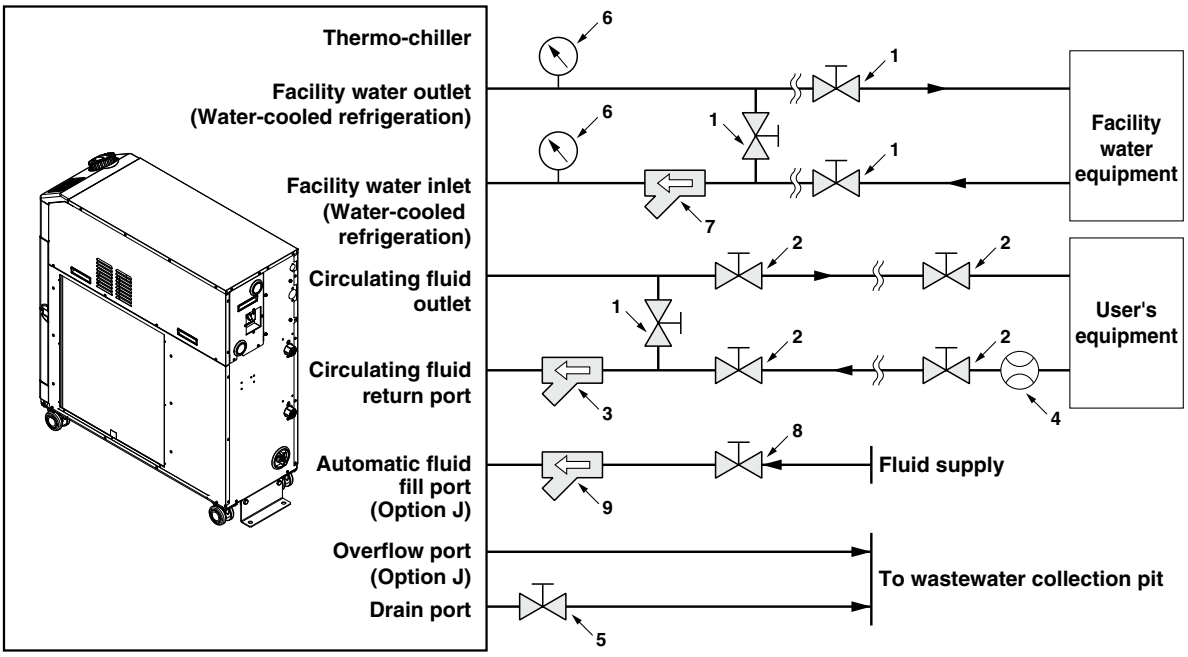

No.	Description	Size	Recommended part no.	Note
1	Valve	Rc1/2	—	—
2	Valve	Rc1	—	—
3	Y-strainer	Rc1 #40	Accessory	Install either the strainer or filter. If foreign matter with a size of 20 μm or more are likely to enter, install the particle filter. For the recommended filter, refer to the optional accessory HRS-PF005 (page 212).
	Filter	Rc1 20 μm	HRS-PF005*1	
4	Flow meter	—	—	Prepare a flow meter with an appropriate flow range.
5	Valve (Part of thermo-chiller)	Rc1/4	—	—
6	Pressure gauge	0 to 1.0 MPa	—	—
7	Y-strainer	Rc1/2 #40	—	Install either the strainer or filter. If foreign matter with a size of 20 μm or more are likely to enter, select and prepare a particle filter.
	Filter	Rc1/2 20 μm	—	
8	Valve	Rc3/8	—	—
9	Y-strainer	Rc3/8 #40	—	Install either the strainer or filter. If foreign matter with a size of 20 μm or more are likely to enter, install the particle filter.
	Filter	Rc3/8 20 μm	FQ1011N-10-T020-B-X61*1	

*1 The filter shown above cannot be directly connected to the thermo-chiller. Install it in the user's piping system.

Cable Specifications

Power supply and signal cable should be prepared by user.

Power Cable Specifications

Applicable model	Rated value for thermo-chiller			Power cable examples	
	Power supply	Applicable breaker rated current	Terminal block screw diameter	Cable size	Crimped terminal on the thermo-chiller side
HRSH090-□□-20	3-phase 200 VAC (50 Hz) 3-phase 200 to 230 VAC (60 Hz)	30 A	M5	4 cores x 5.5 mm² (4 cores x AWG10) (Including grounding cable)	R5.5-5
HRSH090-□□-40	3-phase 380 to 415 VAC (50/60 Hz) 3-phase 460 to 480 VAC (60 Hz)	20 A		3 x 5.5 mm² (3 x AWG10) (Power supply) 1 x 14 mm² (1 x AWG6) (Grounding cable)	R5.5-5 (Power supply) R14-5 (Grounding cable)

* An example of the cable specifications is when two kinds of vinyl insulated wires with a continuous allowable operating temperature of 70°C at 600 V, are used at an ambient temperature of 30°C. Select the proper size of cable according to an actual condition.

Signal Cable Specifications

Terminal specifications		Cable specifications
Terminal block screw diameter	Recommended crimped terminal	0.75 mm² (AWG18) Shielded cable
M3	Y-shape crimped terminal 1.25Y-3	

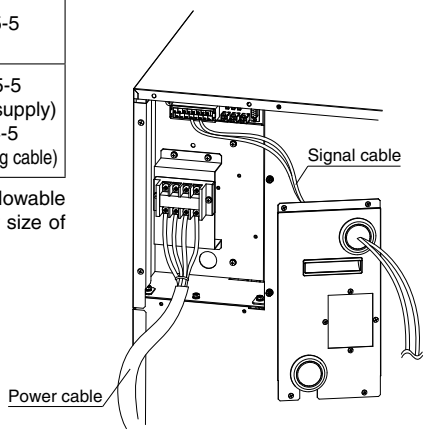

SMC
Courtesy of Steven Engineering, Inc - (800) 258-9200 - sales@steveneng.com - www.stevenengineering.com

Operation Display Panel

The basic operation of this unit is controlled through the operation display panel on the front of the product.

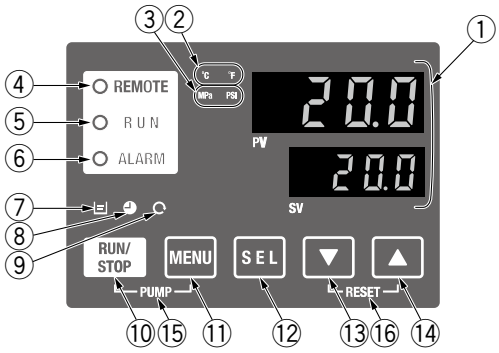

No.	Description	Function	
①	**Digital display (7-segment, 4 digits)**	PV	Displays the circulating fluid current discharge temperature and pressure and alarm codes and other menu items (codes).
		SV	Displays the circulating fluid discharge temperature and the set values of other menus.
②	**[°C] [°F] lamp**	Equipped with a unit conversion function. Displays the unit of displayed temperature (default setting: °C).	
③	**[MPa] [PSI] lamp**	Equipped with a unit conversion function. Displays the unit of displayed pressure (default setting: MPa).	
④	**[REMOTE] lamp**	Enables remote operation (start and stop) by communication. Lights up during remote operation.	
⑤	**[RUN] lamp**	Lights up when the product is started, and goes off when it is stopped. Flashes during stand-by for stop or anti-freezing function, or independent operation of the pump.	
⑥	**[ALARM] lamp**	Flashes with buzzer when alarm occurs.	
⑦	**[ ] lamp**	Lights up when the surface of the fluid level indicator falls below the L level.	
⑧	**[ ] lamp**	Equipped with a timer for start and stop. Lights up when this function is operated.	
⑨	**[ ] lamp**	Equipped with a power failure auto-restart function, which restarts the product automatically after stopped due to a power failure. Lights up when this function is operated.	
⑩	**[RUN/STOP] key**	Makes the product start or stop.	
⑪	**[MENU] key**	Shifts the main menu (display screen of circulating fluid discharge temperature and pressure) and other menus (for monitoring and entry of set values).	
⑫	**[SEL] key**	Changes the item in menu and enters the set value.	
⑬	**[▼] key**	Decreases the set value.	
⑭	**[▲] key**	Increases the set value.	
⑮	**[PUMP] key**	Press the [MENU] and [RUN/STOP] keys simultaneously. The pump starts running independently to make the product ready for start-up (release the air).	
⑯	**[RESET] key**	Press the [▼] and [▲] keys simultaneously. The alarm buzzer is stopped and the [ALARM] lamp is reset.	

List of Function

No.	Function	Outline
1	**Main display**	Displays the current and set temperature of the circulating fluid, discharge pressure of the circulating fluid. Changes the circulating fluid set temperature.
2	**Alarm display menu**	Indicates alarm number when an alarm occurs.
3	**Inspection monitor menu**	Product temperature, pressure and accumulated operating time can be checked as daily inspection. Use these for daily inspection.
4	**Key-lock**	Keys can be locked so that set values cannot be changed by operator error.
5	**Timer for operation start/stop**	Timer is used to set the operation start/stop.
6	**Signal for the completion of preparation**	A signal is output when the circulating fluid temperature reaches the set temperature, when using contact input/output and serial communication.
7	**Offset function**	Use this function when there is a temperature offset between the discharge temperature of the thermo-chiller and user's equipment.
8	**Reset after power failure**	Start operation automatically after the power supply is turned on.
9	**Key click sound setting**	Operation panel key sound can be set on/off.
10	**Changing temp. unit**	Temperature unit can be changed. Centigrade [°C] ⇔ Fahrenheit [°F]
11	**Changing pressure unit**	Pressure unit can be changed. MPa ⇔ PSI
12	**Data reset**	Functions can be reset to the default settings (settings when shipped from the factory).
13	**Accumulation time reset**	Reset function when the pump, the fan or the compressor is replaced. Reset the accumulated time here.
14	**Pump operation mode set**	The fluid supply mode of the pump can be changed Pressure control mode ⇔ Frequency set mode
15	**Anti-freezing function**	Circulating fluid is protected from freezing during winter or at night. Set beforehand if there is a risk of freezing.
16	**Warming-up function**	When circulating fluid temperature rising time at starting needs shortening during winter or at night, set beforehand.
17	**Alarm buzzer sound setting**	Alarm sound can be set to on/off.
18	**Alarm customizing**	Operation during alarm condition and threshold values can be changed depending on the alarm type.
19	**Communication**	This function is used for contact input/output or serial communication.

Alarm

This unit has alarms as standard, and displays each of them by its alarm code on the PV screen with the [ALARM] lamp ([LOW LEVEL] lamp) lit up on the operation display panel. The alarm can be read out through communication.

Code	Alarm message
AL01	Low level in tank
AL02	High circulating fluid discharge temp.
AL03	Circulating fluid discharge temp. rise
AL04	Circulating fluid discharge temp. drop
AL05	High circulating fluid return temp. (60°C)
AL06	High circulating fluid discharge pressure
AL07	Abnormal pump operation
AL08	Circulating fluid discharge pressure rise
AL09	Circulating fluid discharge pressure drop
AL10	High compressor intake temp.
AL11	Low compressor intake temp.
AL12	Low super heat temp.
AL13	High compressor discharge pressure
AL15	Refrigeration circuit pressure (high pressure side) drop
AL16	Refrigeration circuit pressure (low pressure side) rise
AL17	Refrigeration circuit pressure (low pressure side) drop

Code	Alarm message
AL18	Compressor running failure
AL19	Communication error
AL20	Memory error
AL21	DC line fuse cut
AL22	Circulating fluid discharge temp. sensor failure
AL23	Circulating fluid return temp. sensor failure
AL24	Compressor intake temp. sensor failure
AL25	Circulating fluid discharge pressure sensor failure
AL26	Compressor discharge pressure sensor failure
AL27	Compressor intake pressure sensor failure
AL28	Pump maintenance
AL29	Fan maintenance*1
AL30	Compressor maintenance
AL31	Contact input 1 signal detection
AL32	Contact input 2 signal detection
AL37	Compressor discharge temp. sensor failure

Code	Alarm message
AL38	Compressor discharge temp. rise
AL39	Internal unit fan stoppage
AL40	Dustproof filter maintenance*1
AL41	Power stoppage
AL42	Compressor waiting
AL43	Fan breaker trip*1
AL44	Fan inverter error*1
AL45	Compressor breaker trip*2
AL46	Compressor inverter error
AL47	Pump breaker trip*2
AL48	Pump inverter error
AL49	Air exhaust fan stoppage*3

*1 Does not occur on the product of water-cooled refrigeration type.
*2 Does not occur on the product of power supply specification '-20'.
*3 Does not occur on the product of air-cooled refrigeration type.
* For details, read the Operation Manual.

Courtesy of Steven Engineering, Inc - (800) 258-9200 - sales@steveneng.com - www.stevenengineering.com

Communication Functions

Contact Input/Output

Item		Specifications
Connector type		M3 terminal block
Input signal	**Insulation method**	Photocoupler
	Rated input voltage	24 VDC
	Operating voltage range	21.6 to 26.4 VDC
	Rated input current	5 mA TYP
	Input impedance	4.7 kΩ
Contact output signal	**Rated load voltage**	48 VAC or less/30 VDC or less
	Maximum load current	500 mA AC/DC (Resistance load)
	Minimum load current	5 VDC 10 mA
Output voltage		24 VDC ±10% 500 mA MAX (Not usable for inductive load)
Circuit diagram		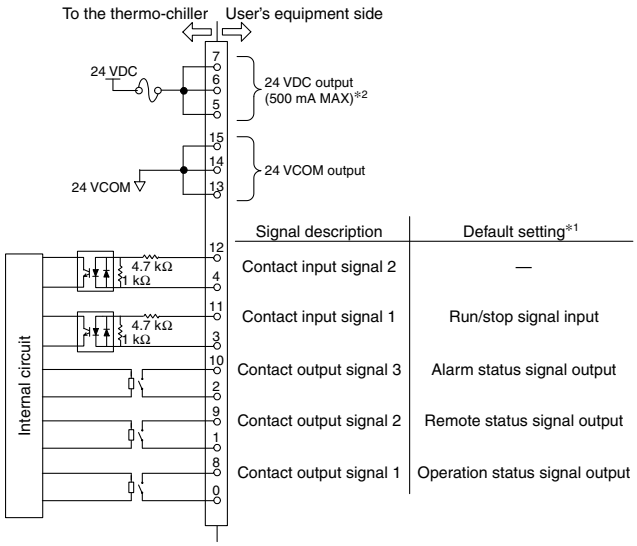

*1 The pin numbers and output signals can be set by user. For details, refer to the Operation Manual, Communication function.
*2 When using with optional accessories, depending on the accessory, the allowable current of 24 VDC devices will be reduced. Refer to the operation manual of the optional accessories for details.

Serial Communication

The serial communication (RS-485/RS-232C) enables the following items to be written and read out.
For details, refer to the Operation Manual, Communication function.

Writing

Run/Stop
Circulating fluid temperature setting (SV)

Readout

Circulating fluid present temperature
Circulating fluid discharge pressure
Status information
Alarm occurrence information

Item	Specifications	
Connector type	D-sub 9-pin, Female connector (Mounting screw: M2.6 x 0.45)	
Protocol	Modicon Modbus compliant/Simple communication protocol	
Standards	EIA standard RS-485	EIA standard RS-232C
Circuit diagram	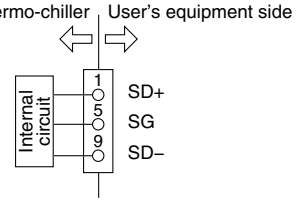	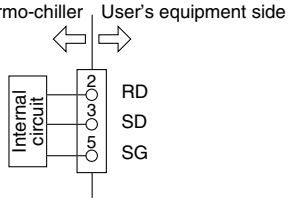

* The terminal resistance of RS-485 (120 Ω) can be switched by the operation display panel. For details, refer to the Operation Manual, Communication function. Do not connect other than in the way shown above, as it can result in failure.

Please download the Operation Manual via our website, https://www.smcworld.com

SMC
Courtesy of Steven Engineering, Inc - (800) 258-9200 - sales@steveneng.com - www.stevenengineering.com

HRSH090 Series
Options

∗ **Options have to be selected when ordering the thermo-chiller. It is not possible to add them after purchasing the unit.**

B Option symbol

With Earth Leakage Breaker

HRSH090−□□−20−B

With earth leakage breaker

A leakage breaker is built in to automatically stop the supply power when it has short-circuit, overcurrent or electrical leakage. (For models with power supply specification '-40', it is not necessary to select this option because an earth leakage breaker is equipped as standard.)

Applicable model	Rated current [A]	Sensitivity of leak current [mA]	Short circuit display method
HRSH090-□□-20-B	30	30	Mechanical button

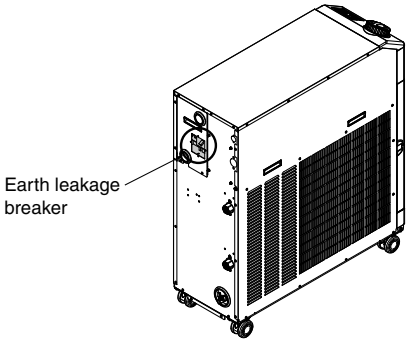

∗ **400 V type is equipped as standard.**

(Refer to the specifications on pages 203, 204 and the dimensions on page 206 for details.)

J Option symbol

With Automatic Fluid Fill Function

HRSH090−□□−□−J

With automatic fluid fill function

By installing this at the automatic fluid fill port, the circulating fluid can be automatically supplied to the product using a built-in solenoid valve for a water fill while the circulating fluid is decreasing.

Applicable model	**HRSH090-□□-□-J**
Fluid fill method	Built-in solenoid valve for automatic water fill
Fluid fill pressure [MPa]	0.2 to 0.5
Feed water temperature [°C]	5 to 40

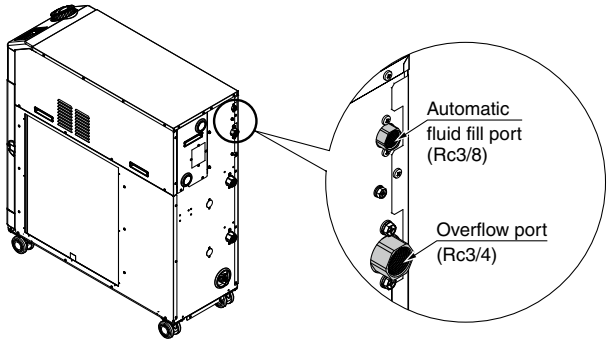

M Option symbol

Applicable to Deionized Water Piping

HRSH090−□□−□−M

Applicable to deionized water piping

Contact material of the circulating fluid circuit is made from non-copper materials.

Applicable model	**HRSH090-□□-□-M**
Contact material for circulating fluid	Stainless steel (including heat exchanger brazing), SiC, Carbon, PP, PE, POM, FKM, NBR, EPDM, PVC, PTFE

∗ No change in external dimensions

S Option symbol

Compliant with CE/UL Standards

HRSH090−□□−20−S

Compliant with CE/UL Standards

Products compliant with CE/UL Standards
The following standards are applicable.

Applicable standard		
CE marking	EMC directive	2004/108/EC
	Machinery directive	2006/42/EC
UL standard	3054524 (UL61010-1)	

When selecting this option,
- An earth leakage breaker with a breaker handle is equipped. (The breaker are the same as those for option B.)
- A caution label is added.
- The CE/UL certification mark is added.

∗ **Cannot be selected for 400 V type.**

∗ **Cannot be selected together with option B.**

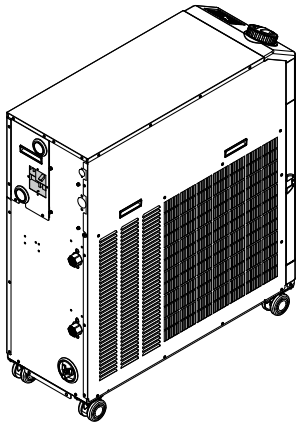

W Option symbol

SI Unit Only

HRSH090−□□−20−W

SI unit only

The circulating fluid temperature and pressure are displayed in SI units [MPa/°C] only.
If this option is not selected, a product with a unit selection function will be provided by default.
∗ No change in external dimensions

Courtesy of Steven Engineering, Inc - (800) 258-9200 - sales@steveneng.com - www.stevenengineering.com

Optional Accessories

① Piping Conversion Fitting

This is a fitting to change the port from Rc to G or NPT.
· Circulating fluid outlet, Circulating fluid return port Rc1 → NPT1 or G1
· Drain port Rc1/4 → NPT1/4 or G1/4
(It is not necessary to purchase this when pipe thread type F or N is selected in "How to Order" since it is included in the product.)

Part no.	Contents	Applicable model
HRS-EP018	NPT thread conversion fitting set	**HRSH090-A-□**
HRS-EP019	G thread conversion fitting set	

Part no.	Contents	Applicable model
HRS-EP022	NPT thread conversion fitting set	**HRSH090-W-□**
HRS-EP023	G thread conversion fitting set	

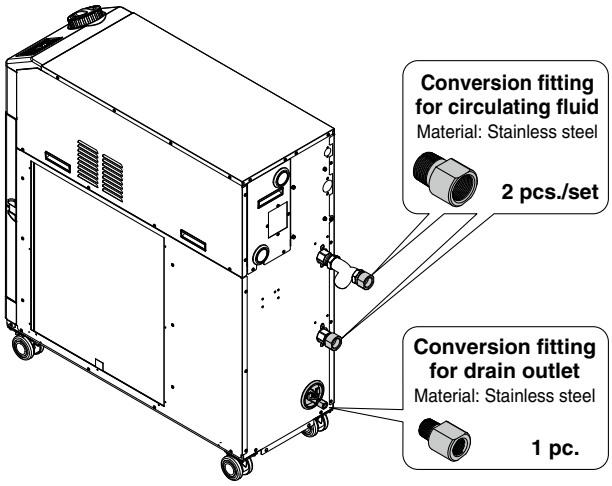

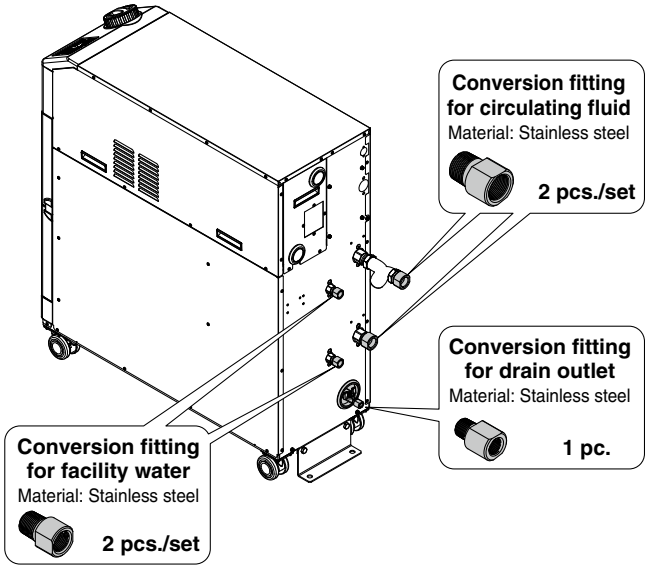

When option J (With automatic fluid fill function) is included, use the following part numbers.
· Automatic fluid fill port Rc3/8 → NPT3/8 or G3/8
· Overflow port Rc3/4 → NPT3/4 or G3/4
∗ The conversion fittings for circulating fluid outlet/return port, drain port, facility water inlet/outlet (for water-cooled refrigeration) are also included.

Part no.	Contents	Applicable model
HRS-EP020	NPT thread conversion fitting set	**HRSH090-A-J**
HRS-EP021	G thread conversion fitting set	

Part no.	Contents	Applicable model
HRS-EP024	NPT thread conversion fitting set	**HRSH090-W-J**
HRS-EP025	G thread conversion fitting set	

② Bypass Piping Set

When the circulating fluid goes below the minimum operating flow rate (as shown below), cooling capacity will be reduced and the temperature stability will be badly affected. Use the bypass piping set to ensure a circulating fluid flow rate of the minimum operating flow rate or more.

Part no.	Applicable model	Minimum operating flow rate [L/min]
HRS-BP005	**HRSH090-□□-□**	20

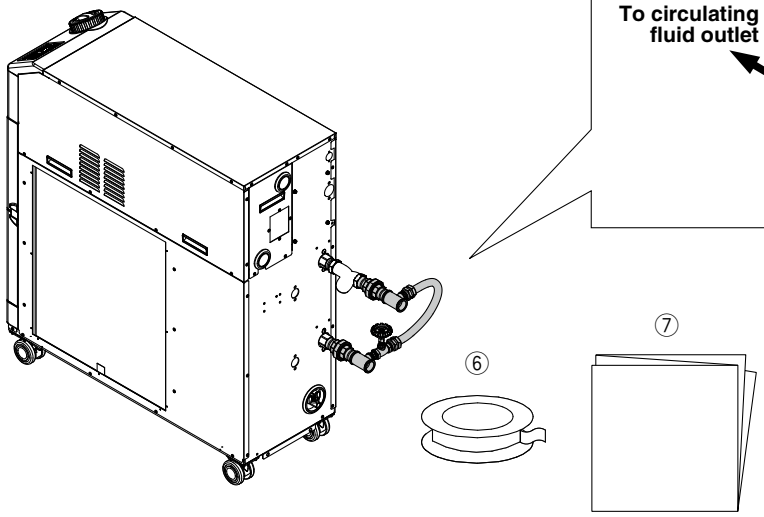

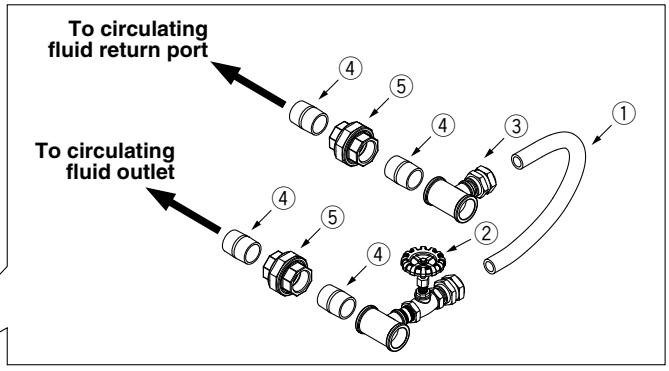

Parts List

No.	Description
①	Hose (I.D.: 15 mm, Length: 700 mm)
②	Outlet piping assembly (With globe valve)
③	Return piping assembly
④	Barrel nipple (Size: 1 inch) (2 pcs.)
⑤	Union (Size: 1 inch) (2 pcs.)
⑥	Sealant tape
⑦	Operation Manual

Courtesy of Steven Engineering, Inc - (800) 258-9200 - sales@steveneng.com - www.stevenengineering.com

③ Electric Conductivity Control Set

The set indicates and controls the electric conductivity of the circulating fluid. Refer to the Operation Manual for details.

Part no.	Applicable model
HRS-DI007	**HRSH090-□□-□**

Measurement range of electric conductivity	2.0 to 48.0 µS/cm
Set range of electric conductivity target	5.0 to 45.0 µS/cm
Set range of electric conductivity hysteresis	2.0 to 10.0 µS/cm
Operating temperature range (Circulating fluid temperature)	5 to 60°C
Power consumption	400 mA or less

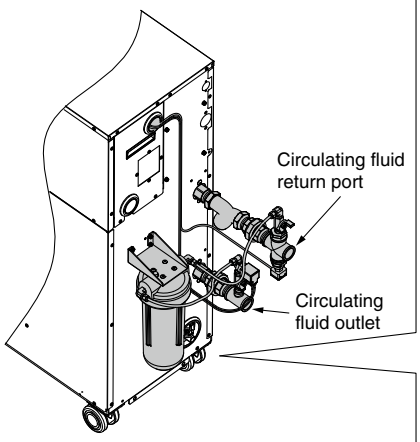

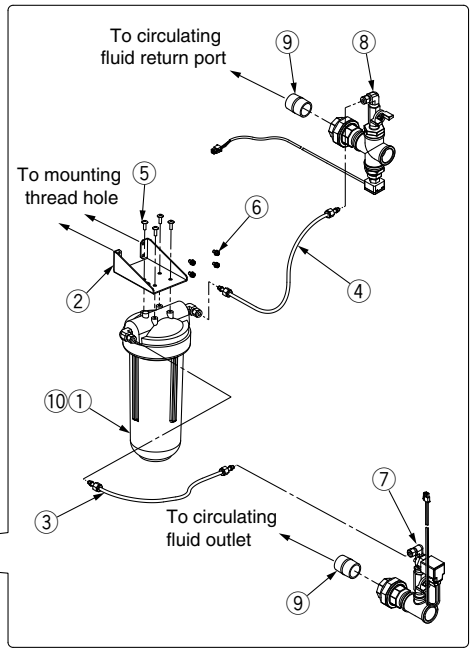

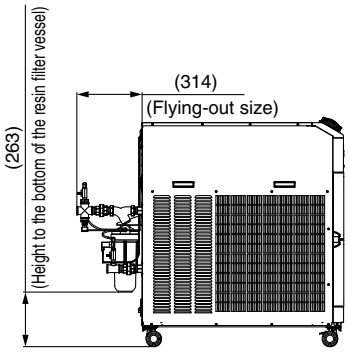

Parts List

No.	Description	Fluid contact material	Qty.
①	DI filter vessel	PC, PP	1
②	Mounting bracket	—	1
③	DI filter inlet tube	PFA, POM	1
④	DI filter outlet tube	PFA, POM	1
⑤	Tapping screw (M5 screw)	—	4
⑥	Mounting screw (M5 screw)	—	4
⑦	DI control piping assembly	Stainless steel, EPDM	1
⑧	DI sensor assembly	Stainless steel, PPS	1
⑨	Nipple (Size: 1 inch)	Stainless steel	2
⑩	DI filter cartridge (Part no.: HRS-DF001)*1	PP, PE	1

*1 The product should be replaced when it can no longer preserve the electrical conductivity set value.

④ Particle Filter Set

Removes foreign matter in the circulating fluid. If foreign matter such as scales in the piping enter the circulating fluid, this may cause the pump to malfunction. Therefore, it is strongly recommended to install the particle filter set. This set cannot be directly connected to the thermo-chiller. Install it in the user's piping system. For details, refer to the Operation Manual.

Particle Filter Set

HRS−PF005−H

Accessory

Symbol	Accessory
Nil	None
H	With handle

Fluid	Tap water
Max. operating pressure	0.65 MPa
Operating temperature range	5 to 35°C
Nominal filtration accuracy	5 µm
Installation environment	Indoors

Parts List

No.	Description	Material	Qty.	Note
①	Body	PC, PP	1	—
②	Element*1	PP	1	—
③	Extension piece	Stainless steel	2	Conversion from NPT to Rc
④	Handle	—	1	When -H is selected
⑤	Sealant tape	PTFE	1	—

*1 The product should be replaced when the pressure drop reaches 0.1 MPa.

Replacement Element

HRS−PF006

The product should be replaced when the pressure drop reaches 0.1 MPa.

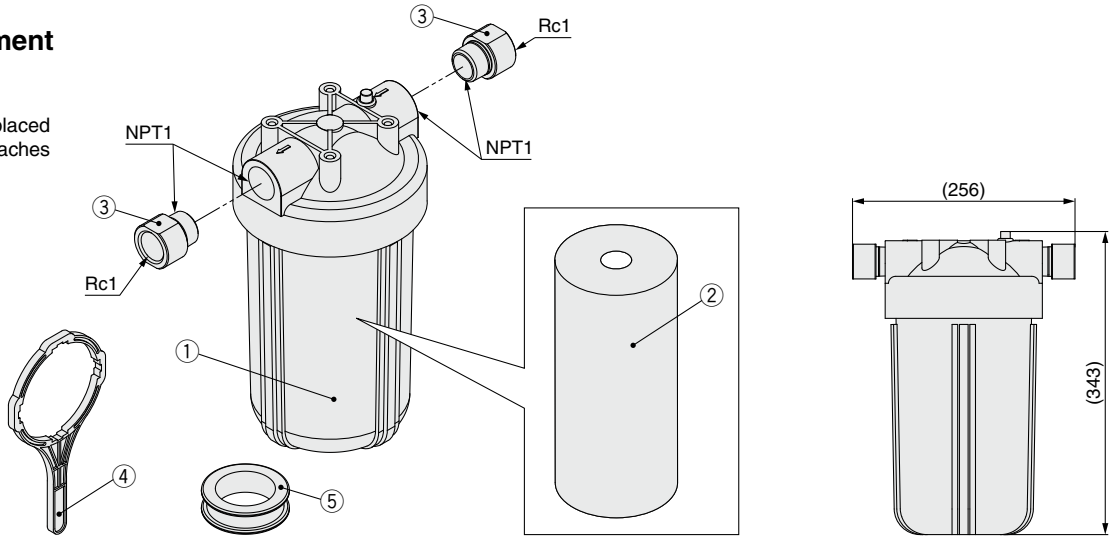

Courtesy of Steven Engineering, Inc - (800) 258-9200 - sales@steveneng.com - www.stevenengineering.com

⑤ Filter for Circulating Fluid Fill Port

Prevents foreign matter from entering the tank when supplying the circulating fluid. Can be used just by fitting into the circulating fluid fill port.

■ Filter for circulating fluid fill port
HRS-PF007

Material	Stainless steel 304, Stainless steel 316
Mesh size	200

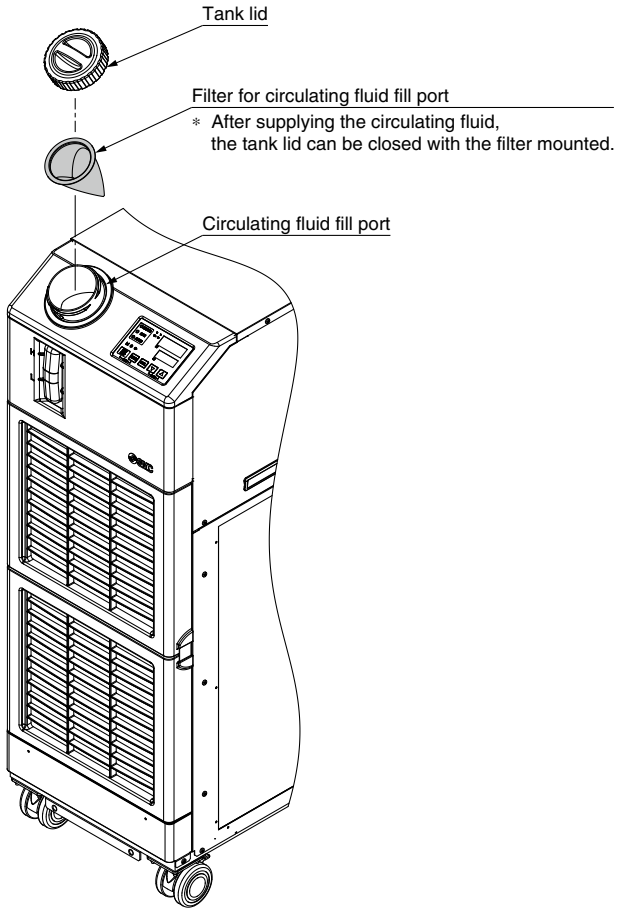

⑥ Drain Pan Set (With Water Leakage Sensor)

Drain pan for the thermo-chiller. Liquid leakage from the thermo-chiller can be detected by mounting the attached water leakage sensor. Align the drain pan with the hole in the bottom of the thermo-chiller for installation.

Part no.	Applicable model
HRS-WL003	**HRSH090-□□-20/40**

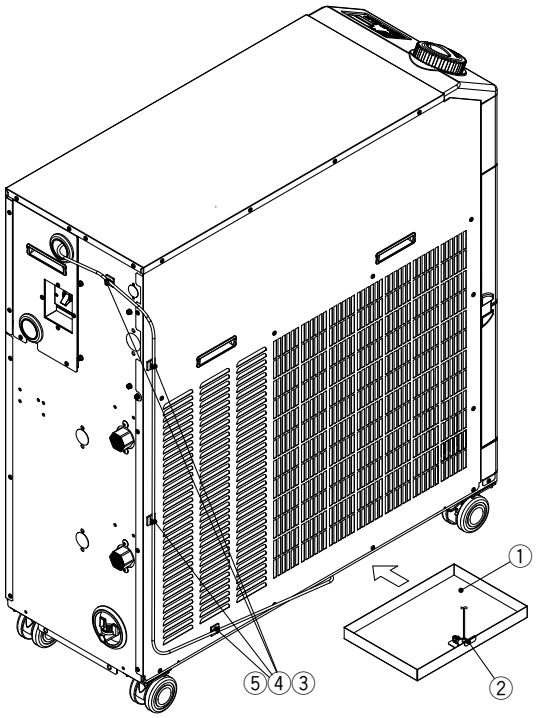

Parts List

No.	Description
①	Drain pan
②	Water leakage sensor
③	Extension cable
④	Binding band (4 pcs.)
⑤	Cable fixture (4 pcs.)

SMC
Courtesy of Steven Engineering, Inc - (800) 258-9200 - sales@steveneng.com - www.stevenengineering.com

⑦ Wired Remote Controller

When the wired remote controller is connected to the thermo-chiller, the operation start/stop setting or the set temperature can be changed from a place apart from the thermo-chiller. For details, refer to the Operation Manual.

Wired Remote Controller

HRS−CV004−1

Accessories

Symbol	Accessories
Nil	None
1	With cable (Approx. 20 m)
2	With cable (Approx. 50 m)
3	With cable (Approx. 100 m)

Wired remote controller

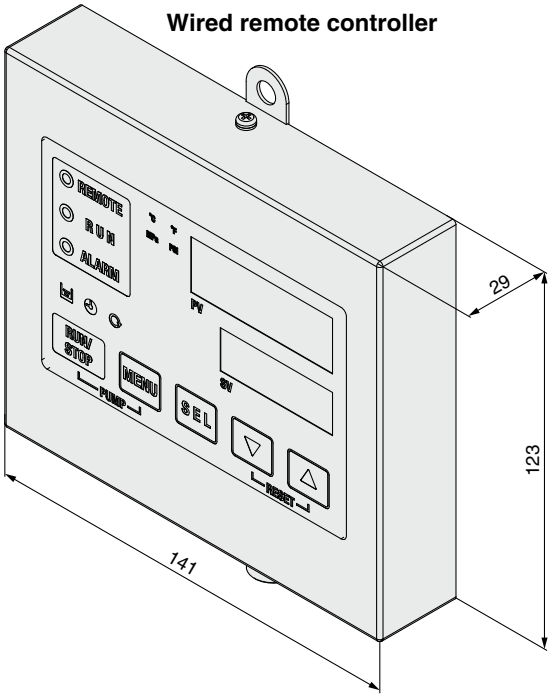

Displayed items

Circulating fluid discharge temperature
Circulating fluid discharge set temperature
Circulating fluid discharge pressure
Circulating fluid electric conductivity*1
Circulating fluid flow rate
Alarm code*2

*1 Only when the electric conductivity control set is used.
*2 Only when an alarm occurs. The alarm cannot be reset with the remote controller. Be sure to reset the alarm with the thermo-chiller main unit.

Operable items

Operation start/stop
Circulating fluid temperature setting
Alarm sound stop
Key-lock
Key operation sound ON/OFF
Digital display brightness adjustment
Alarm sound ON/OFF

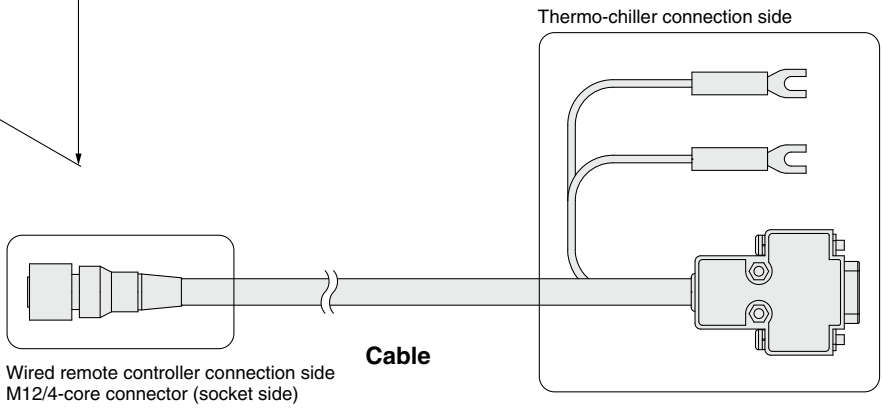

* To use the wired remote controller, the thermo-chiller main unit setting is needed.
* Use the wired remote controller indoors.
* Pass the cable through the duct, etc. so that it is not exposed to rain water or direct sunlight.

Courtesy of Steven Engineering, Inc - (800) 258-9200 - sales@steveneng.com - www.stevenengineering.com

HRSH090 Series
Cooling Capacity Calculation

Required Cooling Capacity Calculation

Example 1: When the heat generation amount in the user's equipment is known.

The heat generation amount can be determined based on the power consumption or output of the heat generating area — i.e. the area requiring cooling — within the user's equipment.∗1

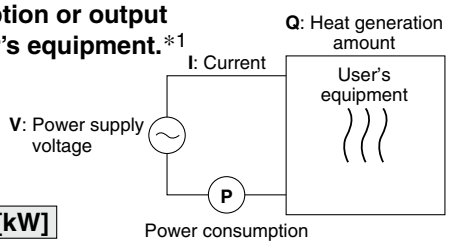

① **Derive the heat generation amount from the power consumption.**

Power consumption **P**: 7 [kW]

Q = P = 7 [kW]

Cooling capacity = Considering a safety factor of 20%, **7 [kW] x 1.2 = 8.4 [kW]**

② **Derive the heat generation amount from the power supply output.**

Power supply output **VI**: 8.8 [kVA]

Q = P = V x I x Power factor

In this example, using a power factor of 0.85:

= 8.8 [kVA] x 0.85 = 7.5 [kW]

Cooling capacity = Considering a safety factor of 20%,

7.5 [kW] x 1.2 = 9.0 [kW]

③ **Derive the heat generation amount from the output.**

Output (shaft power, etc.) **W**: 13 [kW]

$$Q = P = \frac{W}{\text{Efficiency}}$$

In this example, using an efficiency of 0.7:

$$= \frac{5.1}{0.7} = 7.3\ [\text{kW}]$$

Cooling capacity = Considering a safety factor of 20%,

7.3 [kW] x 1.2 = 8.8 [kW]

∗1 The examples above calculate the heat generation amount based on the power consumption.
The actual heat generation amount may differ due to the structure of the user's equipment.
Be sure to check it carefully.

Example 2: When the heat generation amount in the user's equipment is not known.

Obtain the temperature difference between inlet and outlet by circulating the circulating fluid inside the user's equipment.

Heat generation amount by user's equipment **Q**	: Unknown [W] ([J/s])
Circulating fluid	: Tap water∗1
Circulating fluid mass flow rate **qm**	: (= ρ x **qv** ÷ 60) [kg/s]
Circulating fluid density ρ	: 1 [kg/L]
Circulating fluid (volume) flow rate **qv**	: 35 [L/min]
Circulating fluid specific heat **C**	: 4.186 x 10^3 [J/(kg·K)]
Circulating fluid outlet temperature T_1	: 293 [K] (20 [°C])
Circulating fluid return temperature T_2	: 296 [K] (23 [°C])
Circulating fluid temperature difference ΔT	: 3 [K] (= $T_2 - T_1$)
Conversion factor: minutes to seconds (SI units)	: 60 [s/min]

∗1 Refer to page 216 for the typical physical property value of tap water or other circulating fluids.

$$Q = qm \times C \times (T_2 - T_1)$$

$$= \frac{\rho \times qv \times C \times \Delta T}{60} = \frac{1 \times 35 \times 4.186 \times 10^3 \times 3.0}{60}$$

$$= 7325\ [\text{J/s}] \approx 7325\ [\text{W}] = 7.3\ [\text{kW}]$$

Cooling capacity = Considering a safety factor of 20%,

7.3 [kW] x 1.2 = 8.8 [kW]

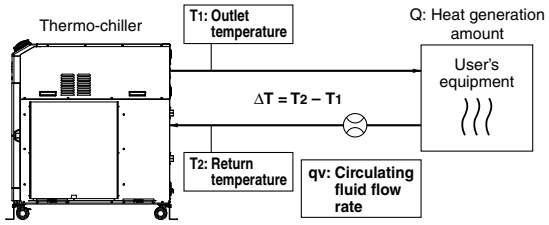

HRSH090-A

Example of conventional units (Reference)

Heat generation amount by user's equipment **Q**	: Unknown [cal/h] → [W]
Circulating fluid	: Tap water∗1
Circulating fluid weight flow rate **qm**	: (= ρ x **qv** x 60) [kgf/h]
Circulating fluid weight volume ratio γ	: 1 [kgf/L]
Circulating fluid (volume) flow rate **qv**	: 35 [L/min]
Circulating fluid specific heat **C**	: 1.0 x 10^3 [cal/(kgf·°C)]
Circulating fluid outlet temperature T_1	: 20 [°C]
Circulating fluid return temperature T_2	: 23 [°C]
Circulating fluid temperature difference ΔT	: 3 [°C] (= $T_2 - T_1$)
Conversion factor: hours to minutes	: 60 [min/h]
Conversion factor: kcal/h to kW	: 860 [(cal/h)/W]

$$Q = \frac{qm \times C \times (T_2 - T_1)}{860}$$

$$= \frac{\gamma \times qv \times 60 \times C \times \Delta T}{860}$$

$$= \frac{1 \times 35 \times 60 \times 1.0 \times 10^3 \times 3.0}{860}$$

$$\approx 7325\ [\text{W}] = 7.3\ [\text{kW}]$$

Cooling capacity = Considering a safety factor of 20%,

7.3 [kW] x 1.2 = 8.8 [kW]

SMC

Courtesy of Steven Engineering, Inc - (800) 258-9200 - sales@steveneng.com - www.stevenengineering.com

Required Cooling Capacity Calculation

Example 3: When there is no heat generation, and when cooling the object below a certain temperature and period of time.

Heat quantity by cooled substance (per unit time) **Q** : Unknown [W] ([J/s])
Cooled substance : Water
Cooled substance mass **m** : (= ρ x **V**) [kg]
Cooled substance density ρ : 1 [kg/L]
Cooled substance total volume **V** : 150 [L]
Cooled substance specific heat **C** : 4.186 x 10^3 [J/(kg·K)]
Cooled substance temperature when cooling begins T_0 : 303 [K] (30 [°C])
Cooled substance temperature after t hour T_t : 293 [K] (20 [°C])
Cooling temperature difference ΔT : 10 [K] (= $T_0 - T_t$)
Cooling time Δt : 900 [s] (= 15 [min])

∗ Refer to the following for the typical physical property values by circulating fluid.

$$Q = \frac{m \times C \times (T_0 - T_t)}{\Delta t} = \frac{\rho \times V \times C \times \Delta T}{\Delta t}$$

$$= \frac{1 \times 150 \times 4.186 \times 10^3 \times 10}{900} = 6977\ [J/s] \approx 7.0\ [kW]$$

Cooling capacity = Considering a safety factor of 20%,

7.0 [kW] x 1.2 = 8.4 [kW]

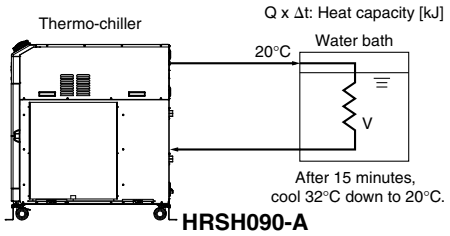

Example of conventional units (Reference)

Heat quantity by cooled substance (per unit time) **Q** : Unknown [cal/h] → [W]
Cooled substance : Water
Cooled substance weight **m** : (= ρ x **V**) [kgf]
Cooled substance weight volume ratio γ : 1 [kgf/L]
Cooled substance total volume **V** : 150 [L]
Cooled substance specific heat **C** : 1.0 x 10^3 [cal/(kgf·°C)]
Cooled substance temperature when cooling begins T_0 : 30 [°C]
Cooled substance temperature after t hour T_t : 20 [°C]
Cooling temperature difference ΔT : 10 [°C] (= $T_0 - T_t$)
Cooling time Δt : 15 [min]
Conversion factor: hours to minutes : 60 [min/h]
Conversion factor: kcal/h to kW : 860 [(cal/h)/W]

$$Q = \frac{m \times C \times (T_0 - T_t)}{\Delta t \times 860} = \frac{\gamma \times V \times 60 \times C \times \Delta T}{\Delta t \times 860}$$

$$= \frac{1 \times 150 \times 60 \times 1.0 \times 10^3 \times 10}{15 \times 860}$$

$$\approx 6977\ [W] = 7.0\ [kW]$$

Cooling capacity = Considering a safety factor of 20%,

7.0 [kW] x 1.2 = 8.4 [kW]

∗ This is the calculated value by changing the fluid temperature only.
Thus, it varies substantially depending on the water bath or piping shape.

Precautions on Cooling Capacity Calculation

1. Heating capacity

When the circulating fluid temperature is set above room temperature, it needs to be heated by the thermo-chiller. The heating capacity depends on the circulating fluid temperature. Consider the radiation rate and heat capacity of the user's equipment and check beforehand if the required heating capacity is provided.

2. Pump capacity

<Circulating fluid flow rate>

Circulating fluid flow rate varies depending on the circulating fluid discharge pressure. Consider the installation height difference between the thermo-chiller and the user's equipment, and the piping resistance such as circulating fluid pipings, or piping size, or piping curves in the machine. Check beforehand if the required flow is achieved, using the pump capacity curves.

<Circulating fluid discharge pressure>

Circulating fluid discharge pressure has the possibility to increase up to the maximum pressure in the pump capacity curves.
Check beforehand if the circulating fluid pipings or circulating fluid circuit of the user's equipment are fully durable against this pressure.

Circulating Fluid Typical Physical Property Values

1. This catalog uses the following values for density and specific heat in calculating the required cooling capacity.

Density ρ: 1 [kg/L] (or, using conventional units, weight volume ratio γ = 1 [kgf/L])
Specific heat **C**: 4.19 x 10^3 [J/(kg·K)] (or, using conventional units, 1 x 10^3 [cal/(kgf·°C)])

2. Values for density and specific heat change slightly according to temperature shown below. Use this as a reference.

Water

Physical property value / Temperature	Density ρ [kg/L]	Specific heat C [J/(kg·K)]	Conventional units	
			Weight volume ratio γ [kgf/L]	Specific heat C [cal/(kgf·°C)]
5°C	1.00	4.2 x 10^3	1.00	1 x 10^3
10°C	1.00	4.19 x 10^3	1.00	1 x 10^3
15°C	1.00	4.19 x 10^3	1.00	1 x 10^3
20°C	1.00	4.18 x 10^3	1.00	1 x 10^3
25°C	1.00	4.18 x 10^3	1.00	1 x 10^3
30°C	1.00	4.18 x 10^3	1.00	1 x 10^3
35°C	0.99	4.18 x 10^3	0.99	1 x 10^3
40°C	0.99	4.18 x 10^3	0.99	1 x 10^3

15% Ethylene Glycol Aqueous Solution

Physical property value / Temperature	Density ρ [kg/L]	Specific heat C [J/(kg·K)]	Conventional units	
			Weight volume ratio γ [kgf/L]	Specific heat C [cal/(kgf·°C)]
5°C	1.02	3.91 x 10^3	1.02	0.93 x 10^3
10°C	1.02	3.91 x 10^3	1.02	0.93 x 10^3
15°C	1.02	3.91 x 10^3	1.02	0.93 x 10^3
20°C	1.01	3.91 x 10^3	1.01	0.93 x 10^3
25°C	1.01	3.91 x 10^3	1.01	0.93 x 10^3
30°C	1.01	3.91 x 10^3	1.01	0.94 x 10^3
35°C	1.01	3.91 x 10^3	1.01	0.94 x 10^3
40°C	1.01	3.92 x 10^3	1.01	0.94 x 10^3

∗ Shown above are reference values. Contact circulating fluid supplier for details.

Courtesy of Steven Engineering, Inc - (800) 258-9200 - sales@steveneng.com - www.stevenengineering.com

HRSH090 Series
Specific Product Precautions 1

Be sure to read this before handling the products. Refer to page 513 for safety instructions and pages 514 to 517 for temperature control equipment precautions.

Design

⚠ Warning

1. This catalog shows the specifications of a single unit.

1. Check the specifications of the single unit (contents of this catalog) and thoroughly consider the adaptability between the user's system and this unit.
2. Although a protection circuit as a single unit is installed, prepare a drain pan, water leakage sensor, discharge air facility, and emergency stop equipment, depending on the user's operating conditions. Also, the user is requested to carry out a safety design for the whole system.

2. When attempting to cool areas that are open to the atmosphere (tanks, pipes), plan your piping system accordingly.

When cooling open-air external tanks, arrange the piping so that there are coil pipes for cooling inside the tanks and to carry back the entire flow volume of circulating fluid that is released.

3. Use non-corrosive materials for circulating fluid contact parts.

The recommended circulating fluid is tap water or 15% ethylene glycol aqueous solution. Using corrosive materials such as aluminum or iron for fluid contact parts such as piping may cause clogging or leakage in the circulating fluid circuit. Therefore, take sufficient care when selecting fluid contact part materials such as piping.

4. Design the piping so that no foreign matter enters the chiller.

If foreign matter, such as scales in the piping, enters the circulating fluid, this may cause the pump to malfunction. Therefore, it is strongly recommended to install the particle filter.

5. The facility water outlet temperature (water-cooled type) may increase up to around 60°C.

When selecting the facility water pipings, consider the suitability for temperature.

Selection

⚠ Warning

Model selection

When selecting a thermo-chiller model, the amount of heat generation from the user's equipment must be known. Obtain this value, referring to "Cooling Capacity Calculation" on pages 215 and 216 before selecting a model.

Handling

⚠ Warning

Thoroughly read the operation manual.

Read the operation manual completely before operation, and keep the manual where it can be referred to as necessary.

Operating Environment/Storage Environment

⚠ Warning

1. Do not use in the following environment as it will lead to a breakdown.

1. Outdoors
2. In locations where water, water vapor, salt water, and oil may splash on the product.
3. In locations where there are dust and particles.
4. In locations where corrosive gases, organic solvents, chemical fluids, or flammable gases are present. (This product is not explosion proof.)
5. In locations where the ambient temperature/humidity exceeds the limits as mentioned below or where condensation occurs.
   During transportation/storage: –15°C to 50°C, 15% to 85%
   (But as long as water or circulating fluid are not left inside the pipings)
   During operation: 5°C to 45°C, 30% to 70%
   (However, use a 15% ethylene glycol aqueous solution if operating in a place where the ambient temperature or circulating fluid temperature is 10°C or less.)
6. In locations where condensation may occur.
7. In locations which receive direct sunlight or radiated heat.
8. In locations where there is a heat source nearby and the ventilation is poor.
9. In locations where temperature substantially changes.
10. In locations where strong magnetic noise occurs.
    (In locations where strong electric fields, strong magnetic fields and surge voltage occur.)
11. In locations where static electricity occurs, or conditions which make the product discharge static electricity.
12. In locations where high frequency occurs.
13. In locations where damage is likely to occur due to lightning.
14. In locations at an altitude of 3000 m or higher (Except during storage and transportation)
    ∗ For altitudes of 1000 m or higher
    Because of lower air density, the heat radiation efficiencies of the devices in the product will be lower in the location at an altitude of 1000 m or higher. Therefore, the maximum ambient temperature to use and the cooling capacity will lower according to the descriptions in the table below.
    Select the thermo-chiller considering the descriptions.
    ① Upper limit of ambient temperature: Use the product in ambient temperature of the described value or lower at each altitude.
    ② Cooling capacity coefficient: The product's cooling capacity will lower to one that multiplied by the described value at each altitude.

Altitude [m]	① Upper limit of ambient temperature [°C]	② Cooling capacity coefficient
Less than 1000 m	45	1.00
Less than 1500 m	42	0.85
Less than 2000 m	38	0.80
Less than 2500 m	35	0.75
Less than 3000 m	32	0.70

15. In locations where strong impacts or vibrations occur.
16. In locations where a massive force strong enough to deform the product is applied or a weight from a heavy object is applied.
17. In locations where there is not sufficient space for maintenance.
18. Bevelled place
19. Insects or plants may enter the unit.

2. The product is not designed for clean room usage. It generates particles internally.

Courtesy of Steven Engineering, Inc - (800) 258-9200 - sales@steveneng.com - www.stevenengineering.com

HRSH090 Series
Specific Product Precautions 2

Be sure to read this before handling the products. Refer to page 513 for safety instructions and pages 514 to 517 for temperature control equipment precautions.

Transportation/Carriage/Movement

⚠ Warning

1. **This product is heavy. Pay attention to safety and the position of the product when it is transported, carried, and moved.**
2. **Read the operation manual carefully before moving the product after unpacking.**

⚠ Caution

1. **Never put the product down on its side as this may cause a failure.**
   The product will be delivered in the packaging shown below.

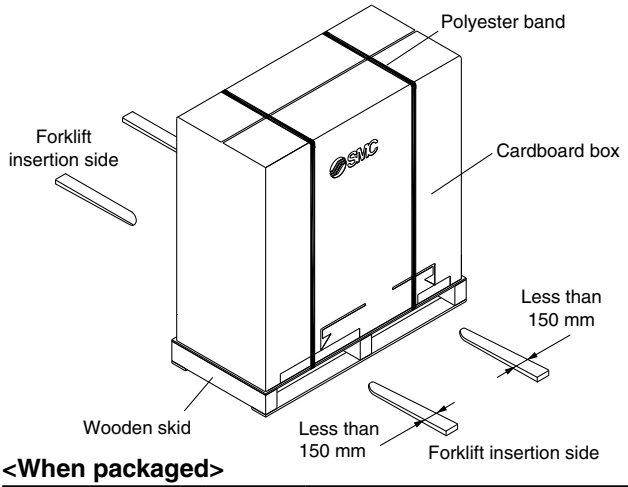

<When packaged>

Model	Weight [kg]	Dimensions [mm]
HRSH090-A-20/40	165	Height 1320 x Width 580 x Depth 1240
HRSH090-W-20/40	156	

2. Transporting with forklift

1. A licensed driver should drive the forklift.
2. Insert the fork to the place specified on the label. The fork should reach through to the other side of the product.
3. Be careful not to bump the fork to the cover panel or piping ports.

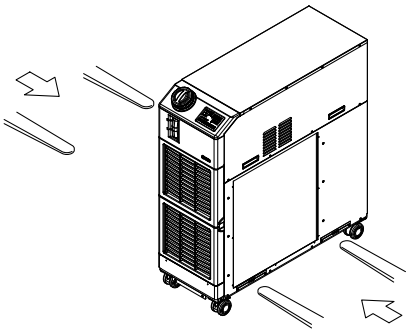

3. Transporting with casters

1. This product is heavy and should be moved by at least two people to avoid falling.
2. Do not grip the piping port on the back side or the handles of the panel.
3. Do not pass over bumps, etc. with the casters.

⚠ Caution

If this product is to be transported after delivery, please use the original packaging the product was delivered in. If other packaging is to be used, carefully package the product so as to prevent the product from incurring any damage during transport.

Installation

⚠ Warning

1. **Do not use the product outdoors.**
2. **Do not place heavy objects on top of this product, or step on it.**
   The external panel can be deformed and danger can result.

⚠ Caution

1. **Install on a rigid floor which can withstand this product's weight.**
2. **Refer to the operation manual for this product, and secure an installation space that is necessary for the maintenance and ventilation.**

<Air-cooled refrigeration>

1. The air-cooled type product exhausts heat using the fan that is mounted to the product. If the product is operated with insufficient ventilation, ambient temperature may exceed 45°C, and this will affect the performance and life of the product. To prevent this ensure that suitable ventilation is available (see below).
2. For installation indoors, ventilation ports and a ventilation fan should be equipped as needed.

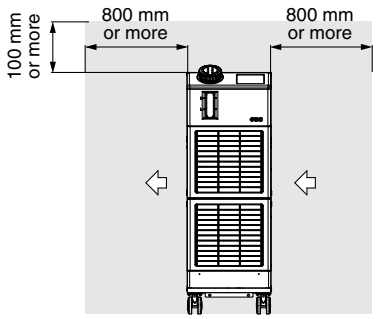

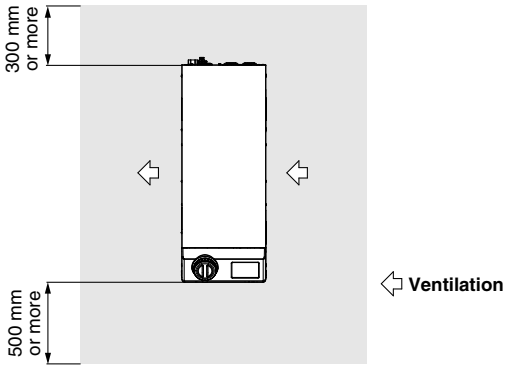

3. If it is impossible to exhaust heat from the installation area indoors, or when the installation area is conditioned, provide a duct for heat exhaustion to the air outlet port of this product for ventilation. Do not mount the inlet of the duct (flange) directly to the air vent of the product, and keep a space larger than the diameter of the duct. Additionally, consider the resistance of the duct when making the air vent port for the duct.

<Heat radiation amount/Required ventilation rate>

Model	Heat radiation amount [kW]	Required ventilation rate [m³/min]	
		Differential temp. of 3°C between inside and outside of installation area	Differential temp. of 6°C between inside and outside of installation area
HRSH090-A-20/40	Approx. 18	305	155

Courtesy of Steven Engineering, Inc - (800) 258-9200 - sales@steveneng.com - www.stevenengineering.com

HRSH090 Series
Specific Product Precautions 3

Be sure to read this before handling the products. Refer to page 513 for safety instructions and pages 514 to 517 for temperature control equipment precautions.

Piping

⚠ Caution

1. Regarding the circulating fluid and facility water pipings, consider carefully the suitability for temperature, circulating fluid.
If the operating performance is not sufficient, the pipings may burst during operation. Also, the use of corrosive materials such as aluminum or iron for fluid contact parts, such as piping, may not only lead to clogging or leakage in the circulating fluid and facility water circuits but also refrigerant leakage and other unexpected problems. Provide protection against corrosion when you use the product.

2. Select the piping port size which can exceed the rated flow.
For the rated flow, refer to the pump capacity table.

3. When tightening at the drain port of this product, use a pipe wrench to clamp the connection ports.

4. For the circulating fluid piping connection, install a drain pan and wastewater collection pit just in case the circulating fluid may leak.

5. This product series are constant-temperature fluid circulating machines with built-in tanks.
Do not install equipment on your system side such as pumps that forcibly return the circulating fluid to the unit. Also, if you attach an external tank that is open to the air, it may become impossible to circulate the circulating fluid. Proceed with caution.

Circulating Fluid

⚠ Caution

1. Avoid oil or other foreign matter entering the circulating fluid.

2. When water is used as a circulating fluid, use tap water that conforms to the appropriate water quality standards.
Use tap water that conforms to the standards shown below (including water used for dilution of ethylene glycol aqueous solution).

Tap Water (as a Circulating Fluid) Quality Standards
The Japan Refrigeration and Air Conditioning Industry Association
JRA GL-02-1994 "Cooling water system – Circulation type – Make-up water"

	Item	Unit	Standard value	Influence	
				Corrosion	Scale generation
Standard item	pH (at 25°C)	—	6.0 to 8.0	○	○
	Electric conductivity (25°C)	[μS/cm]	100*1 to 300*1	○	○
	Chloride ion (Cl^-)	[mg/L]	50 or less	○	
	Sulfuric acid ion (SO_4^{2-})	[mg/L]	50 or less	○	
	Acid consumption amount (at pH4.8)	[mg/L]	50 or less		○
	Total hardness	[mg/L]	70 or less		○
	Calcium hardness ($CaCO_3$)	[mg/L]	50 or less		○
	Ionic state silica (SiO_2)	[mg/L]	30 or less		○
Reference item	Iron (Fe)	[mg/L]	0.3 or less	○	○
	Copper (Cu)	[mg/L]	0.1 or less	○	
	Sulfide ion (S_2^-)	[mg/L]	Should not be detected.	○	
	Ammonium ion (NH_4^+)	[mg/L]	0.1 or less	○	
	Residual chlorine (Cl)	[mg/L]	0.3 or less	○	
	Free carbon (CO_2)	[mg/L]	4.0 or less	○	

*1 In the case of [MΩ·cm], it will be 0.003 to 0.01.
• ○: Factors that have an effect on corrosion or scale generation.
• Even if the water quality standards are met, complete prevention of corrosion is not guaranteed.

3. Use an ethylene glycol aqueous solution that does not contain additives such as preservatives.

4. When using ethylene glycol aqueous solution, maintain a maximum concentration of 15%.
Overly high concentrations can cause a pump overload.
Low concentrations, however, can lead to freezing when circulating fluid temperature is 10°C or lower and cause the thermo-chiller to break down.

Circulating Fluid

⚠ Caution

5. When deionized water is used, the electric conductivity should be 1 μS/cm or higher (Electric resistivity: 1 MΩ·cm or lower).

Electrical Wiring

⚠ Warning

Grounding should never be connected to a water line, gas line or lightning rod.

⚠ Caution

1. Power supply and communication cables should be prepared by user.

2. Provide a stable power supply which is not affected by surge or distortion.
If the voltage increase ratio (dV/dt) at the zero cross should exceed 40 V/200 μsec., it may result in malfunction.

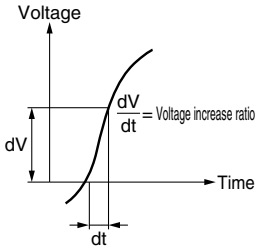

<For option B [With earth leakage breaker]>

3. This product is installed with a breaker with the following operating characteristics.
For the user's equipment (inlet side), use a breaker whose operating time is equal to or longer than the breaker of this product. If a breaker with shorter operating time is connected, the user's equipment could be cut off due to the inrush current of the motor of this product.

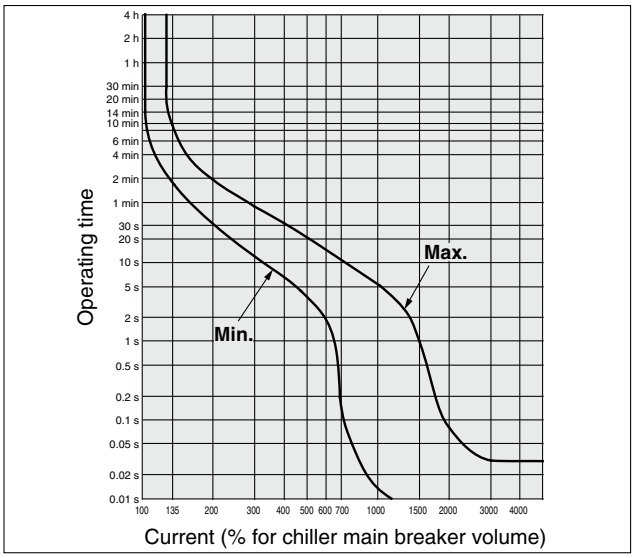

Facility Water Supply

⚠ Warning

<Water-cooled refrigeration>

1. The water-cooled refrigeration type thermo-chiller radiates heat to the facility water. Prepare the facility water system that satisfies the heat radiation and the facility water specifications below.

■ Required facility water system
<Heat radiation amount/Facility water specifications>

Model	Heat radiation [kW]	Facility water specifications
HRSH090-W□-□	Approx. 20	Refer to "Facility water system" in the specifications on page 204.

Courtesy of Steven Engineering, Inc - (800) 258-9200 - sales@steveneng.com - www.stevenengineering.com

HRSH090 Series
Specific Product Precautions 4

Be sure to read this before handling the products. Refer to page 513 for safety instructions and pages 514 to 517 for temperature control equipment precautions.

Facility Water Supply

⚠ Warning

2. When using tap water as facility water, use tap water that conforms to the appropriate water quality standards.
Use tap water that conforms to the standards shown below.
If the water quality standards are not met, clogging or leakage in the facility water piping, or other problems such as refrigerant leakage, etc., may result.

Tap Water (as Facility Water) Quality Standards
The Japan Refrigeration and Air Conditioning Industry Association
JRA GL-02-1994 "Cooling water system – Circulation type – Make-up water"

	Item	Unit	Standard value	Influence	
				Corrosion	Scale generation
Standard item	pH (at 25°C)	—	6.5 to 8.2	○	○
	Electric conductivity (25°C)	[μS/cm]	100*1 to 800*1	○	○
	Chloride ion (Cl^-)	[mg/L]	200 or less	○	
	Sulfuric acid ion (SO_4^{2-})	[mg/L]	200 or less	○	
	Acid consumption amount (at pH4.8)	[mg/L]	100 or less		○
	Total hardness	[mg/L]	200 or less		○
	Calcium hardness ($CaCO_3$)	[mg/L]	150 or less		○
	Ionic state silica (SiO_2)	[mg/L]	50 or less		○
Reference item	Iron (Fe)	[mg/L]	1.0 or less	○	○
	Copper (Cu)	[mg/L]	0.3 or less	○	
	Sulfide ion (S_2^-)	[mg/L]	Should not be detected.	○	
	Ammonium ion (NH_4^+)	[mg/L]	1.0 or less	○	
	Residual chlorine (Cl)	[mg/L]	0.3 or less	○	
	Free carbon (CO_2)	[mg/L]	4.0 or less	○	

*1 In the case of [MΩ·cm], it will be 0.001 to 0.01.
• ○: Factors that have an effect on corrosion or scale generation.
• Even if the water quality standards are met, complete prevention of corrosion is not guaranteed.

3. Set the supply pressure between 0.3 to 0.5 MPa. Ensure a pressure difference at the facility water inlet/outlet of 0.3 MPa or more.
If the supply pressure is high, it will cause water leakage. If the supply pressure and pressure difference at the facility water inlet/outlet is low, it will cause an insufficient flow rate of the facility water, and poor temperature control.

Operation

⚠ Warning

1. Confirmation before operation
1) The fluid level of a tank should be within the specified range of H (High) and L (Low). When exceeding the specified level, the circulating fluid will overflow.
2) Remove the air.
Conduct a trial operation, looking at the fluid level.
Since the fluid level will go down when the air is removed from the user's piping system, supply water once again when the fluid level is reduced. When there is no reduction in the fluid level, the job of removing the air is completed.
Pump can be operated independently.

2. Confirmation during operation
• Check the circulating fluid temperature.
The operating temperature range of the circulating fluid is between 5 and 40°C.
When the amount of heat generated from the user's equipment is greater than the product's capability, the circulating fluid temperature may exceed this range. Use caution regarding this matter.

3. Emergency stop method
• When an abnormality is confirmed, stop the machine immediately. After stopping operation, disconnect the power supply from the user's equipment.

Operation Restart Time/Operation and Suspension Frequency

⚠ Caution

1. Wait five minutes or more before restarting operation after it has been stopped. If the operation is restarted within five minutes, the protection circuit may activate and the operation may not start properly.

2. Operation and suspension frequency should not exceed 10 times per day. Frequently switching between operation and suspension may result in the malfunction of the refrigeration circuit.

Protection Circuit

⚠ Caution

If operating in the below conditions, the protection circuit will activate and an operation may not be performed or will stop.
• Power supply voltage is not within the rated voltage range of ±10%.
• In case the water level inside the tank is reduced abnormally.
• Circulating fluid temperature is too high.
• Compared to the cooling capacity, the heat generation amount of the user's equipment is too high.
• Ambient temperature is too high. (Check the ambient temperature in the specifications.)
• Ventilation hole is clogged with dust or dirt.

Maintenance

⚠ Caution

<Periodical inspection every one month>
Clean the ventilation hole.
If the dustproof filter of water-cooled type product becomes clogged with dust or debris, a decline in cooling performance can result.
In order to avoid deforming or damaging the dustproof filter, clean it with a long-haired brush or air gun.

<Periodical inspection every three months>
Inspect the circulating fluid.
1. When using tap water or deionized water
• Replacement of circulating fluid
Failure to replace the circulating fluid can lead to the development of bacteria or algae. Replace it regularly depending on your usage conditions.
• Tank cleaning (same as the HRS series)
Consider whether dirt, slime or foreign matter may be present in the circulating fluid inside the tank, and carry out regular cleanings of the tank.
2. When using ethylene glycol aqueous solution
Use a concentration meter to confirm that the concentration does not exceed 15%.
Dilute or add as needed to adjust the concentration.

<Periodical inspection during the winter season>
1. Make water-removal arrangements beforehand.
If there is a risk of the circulating fluid and facility water freezing when the product is stopped, release the circulating fluid and facility water in advance.

2. Consult a professional.
This product has an "anti-freezing function" and "warming-up function." Read the operation manual carefully, and if any additional anti-freezing function (e.g. tape heater) is needed, ask for it from the vendor.

Courtesy of Steven Engineering, Inc - (800) 258-9200 - sales@steveneng.com - www.stevenengineering.com

Specific Product Precautions 5

Be sure to read this before handling the products. Refer to page 513 for safety instructions and pages 514 to 517 for temperature control equipment precautions.

■ Refrigerant with GWP reference

Refrigerant	Global warming potential (GWP)	
	Regulation (EU) No 517/2014 (Based on the IPCC AR4)	Revised Fluorocarbons Recovery and Destruction Law (Japanese law)
R134a	1,430	1,430
R404A	3,922	3,920
R407C	1,774	1,770
R410A	2,088	2,090

∗ This product is hermetically sealed and contains fluorinated greenhouse gases (HFC). When this product is sold on the market in the EU after January 1, 2017, it needs to be compliant with the quota system of the F-Gas Regulation in the EU.
∗ See specification table for refrigerant used in the product.

Courtesy of Steven Engineering, Inc - (800) 258-9200 - sales@steveneng.com - www.stevenengineering.com