CATALOGUE

SPINEA
BY TIMKEN

Courtesy of Steven Engineering, Inc - (800) 258-9200 - sales@steveneng.com - www.stevenengineering.com

SPINEA, s.r.o.
Ku Magašu 702/3
080 01 Haniska, District of Prešov
Slovakia, EU

Sales Department:
+421 51 770 01 56
info@spinea.com
sales@spinea.com
www.spinea.com

North America
Cone Drive
240 E. 12th Street
Traverse City, Michigan, USA, 49684

Tel: 1-888-994-2663 or +1-231-946-8410
Fax: 1-888-907-2663
Customer Service: orders@conedrive.com
Application Engineering: ae@conedrive.com
www.conedrive.com

SPINEA Deutschland GmbH.
Heilbronner Strasse, 150
Stuttgart, Baden-Württemberg 70191
Germany, EU

Sales Department:
+49 (0) 151 29609820
+49 71512720770
info@spinea.de
sales@spinea.com
www.spinea.com

SPINEA Shanghai Commercial and Trading Co., Ltd
Room 3728,West Nanjing Road 580
Jing'an District, Shanghai
China

Sales Department:
+86 156 2601 1464
+86 152 2193 7696
info@spinea.com
sales@spinea.com
www.spinea.cn.com

TwinSpin® – HIGH PRECISION REDUCTION GEARS
DriveSpin® - HIGH PRECISION ACTUATORS

The SPINEA® catalogue, as well as further catalogues and publications are available on our website www.spinea.com in the DOWNLOADS section. You can also find helpful information on our multimedia USB, which includes technical documentation. In addition, it also includes an interactive presentation of the TwinSpin® operating principle and 2D/3D technical drawings. Please contact the SPINEA® sales department or your sales representative for a free copy.

© SPINEA, s.r.o. 2023
All rights reserved.

Reproduction in part or in whole is not permitted without prior authorization from SPINEA, s.r.o.

Although maximum care has been taken while preparing this catalogue, liability cannot be accepted for any errors or omissions thereof.

Specifications contained in this catalogue are subject to innovation change without prior notice.

Trademark note:
Trademark TwinSpin® registered in: EU member states.
Trademark DriveSpin® registered in: SK, DK, GB, IL, IN, JP, KR, SE, TR, US, AT, BX, CH, CN, CZ, DE, FR, PL, RU

Courtesy of Steven Engineering, Inc - (800) 258-9200 - sales@steveneng.com - www.stevenengineering.com

HIGH PRECISION REDUCTION GEARS
TwinSpin®

G SERIES 17 – 40

GH SERIES 41 – 50

T SERIES 51 – 64

E SERIES 65 – 76

H SERIES 77 – 86

M SERIES 87 – 95

HIGH PRECISION ACTUATORS
DriveSpin®

DS SERIES 158 – 177

DSH SERIES 178 – 198

DSM SERIES 199 – 210

DSF SERIES 211 – 221

SPECIAL SOLUTIONS
YourSpin

YS GEARS 243 – 246

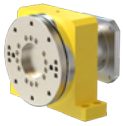

YS ACTUATORS 247 – 248

Courtesy of Steven Engineering, Inc - (800) 258-9200 - sales@steveneng.com - www.stevenengineering.com

CONTENTS . . . 4
ABOUT US . . . 6
1. TwinSpin® - General information . . . 8
Main parts description . . . 10
Operating principle . . . 11
Advantages . . . 12
Applications . . . 14
2. TwinSpin® series . . . 16
2.1 G series . . . 16
2.2 GH series . . . 41
2.3 T series . . . 51
2.4 E series . . . 65
2.5 H series . . . 77
2.6 M series . . . 87
3. Performance characteristics . . . 96
3.1 G, GH, T, E, H, M series service life calculation . . . 96
3.2 M series maximum continuous input speed ($n_{c\ max}$) . . . 96
3.3 G, GH, T, E, H, M series maximum acceleration and braking torques . . . 96
3.4 G, GH, T, E, H, M series maximum emergency stop torque (T_{em}) . . . 96
3.5 Allowable radial-axial load and moment load on the output flange of the G, GH, T, E, H series . . . 96
3.6 G, GH, T, E, H, M series output flange tilting stiffness and deflection angle . . . 102
3.7 G, GH, T, E, H, M series lost motion, hysteresis and torsional stiffness . . . 102
3.8 G, GH, T, E, H, M series torsional vibrations . . . 103
3.9 G, GH, T, E, H, M series angular transmission accuracy . . . 104
3.10 G, GH, T, E, H, M series no-load starting torque . . . 104
3.11 G, GH, T, E, H, M series back-driving torque . . . 104
3.12 G, GH, T, E, H, M series maximum moment on the input shaft ($M_{c\ in}$) . . . 104
3.13 G series efficiency chart . . . 106
3.14 GH series efficiency chart . . . 109
3.15 G series no-load running torque . . . 109
3.16 GH series no-load running torque . . . 110
3.17 T, E, H, M series efficiency chart . . . 111
3.18 G, GH, T, E, H, M series rotation direction and reduction ratio . . . 113
4. TwinSpin® selection procedure . . . 114
4.1 G, GH, T, E, H, M series duty cycle . . . 114
4.2 G, GH, T, E, H series selection flowchart . . . 115
4.3 T, E, H selection example . . . 117
5. Assembly . . . 121
5.1 G, GH, T, E, H, M series assembly manual . . . 121
5.2 E series installation examples . . . 130
5.3 H series installation examples . . . 137
5.4 M series installation examples . . . 140
5.5 Lubrication, cooling, preheating . . . 144
5.6 Thermal conditions . . . 147
5.7 Motor flanges . . . 147
6. General information . . . 148
6.1 Maintenance . . . 148
6.2 Delivery conditions . . . 148
6.3 Transport and storage . . . 148
6.4 Warranty . . . 148
6.5 Final statement . . . 148
6.6 Cautions concerning the application of the TwinSpin® high precision reduction gear . . . 148
6.7 FAQ . . . 149

SPINEA BY TIMKEN
Courtesy of Steven Engineering, Inc - (800) 258-9200 - sales@steveneng.com - www.stevenengineering.com

7. DriveSpin® - General information 150
Advantages 152
8. DriveSpin® series 154
8.1 DS series 158
8.2 DSH series 178
8.3 DSM series 198
8.4 DSF series 211
8.5 Configuration matrix 222
Type of electrical connection 224
Power connection 226
Signal connection 228
Hybrid connection 231
Technical specifications of thermistors 232
Identification labels 233
8.6 Accessories configuration 234
Ordering code example 235
8.7 Performance conditions and technical terminology 236
8.9 Assembly 240
8.10 FAQ 242
9. YourSpin General information 243
9.1 Customized / Special reduction gears 244
9.2 Customized / Special solutions 245
9.3 Customized / Special actuators 247
10. General information 249
10.1 Maintenance 249
10.2 Delivery conditions 249
10.3 Transport and storage 249
10.4 Warranty 249
10.5 Final statement 249
10.6 Cautions concerning the application of the TwinSpin® high precision reduction gear 249

Courtesy of Steven Engineering, Inc - (800) 258-9200 - sales@steveneng.com - www.stevenengineering.com

SPINEA, s.r.o. is a modern Slovak engineering company, engaged in the development, manufacturing and sales of high-precision reduction gears, sold under the trademark TwinSpin®. An invention of a Slovak engineer was the impulse for the company establishment in 1994. The TwinSpin® high precision reduction gears are serially manufactured, based on the grant of an international patent. The TwinSpin® gears belong to the category of hi-tech products and represent a unique technical solution, which integrates radial-axial bearings with high precision reduction gear into a single compact unit. The company products are suitable for applications, which require high reduction-gear ratio, high kinematic precision, zero-backlash motion, high torque capacity, high rigidity, compact design in a limited installation space as well as low weight. They are widely used in automation and industrial robotics, in the field of machine tools manufacturing, in navigation and camera equipment, medical systems, and in many other fields.

Courtesy of Steven Engineering, Inc - (800) 258-9200 - sales@steveneng.com - www.stevenengineering.com

Courtesy of Steven Engineering, Inc - (800) 258-9200 - sales@steveneng.com - www.stevenengineering.com

1. TwinSpin® - General information

The TwinSpin® (TS) high precision reduction gears are based on a new reduction mechanism and a new designof the radial-axial output bearing. As a result, they represent a new generation of power transmission systems. The mark "TwinSpin®" indicates full integration of high precision trochoidal reduction gear and radial-axial bearing in a single unit. The new transmission concept allows the use of reduction gears directly in robot joints, rotary tables and wheel gears in various transport systems. The TwinSpin® high precision reduction gears are designed for applications requiring high reduction ratio, high kinematic accuracy, low lost motion, high moment capacity and high rigidity of a compact design with limited installation space and low mass.

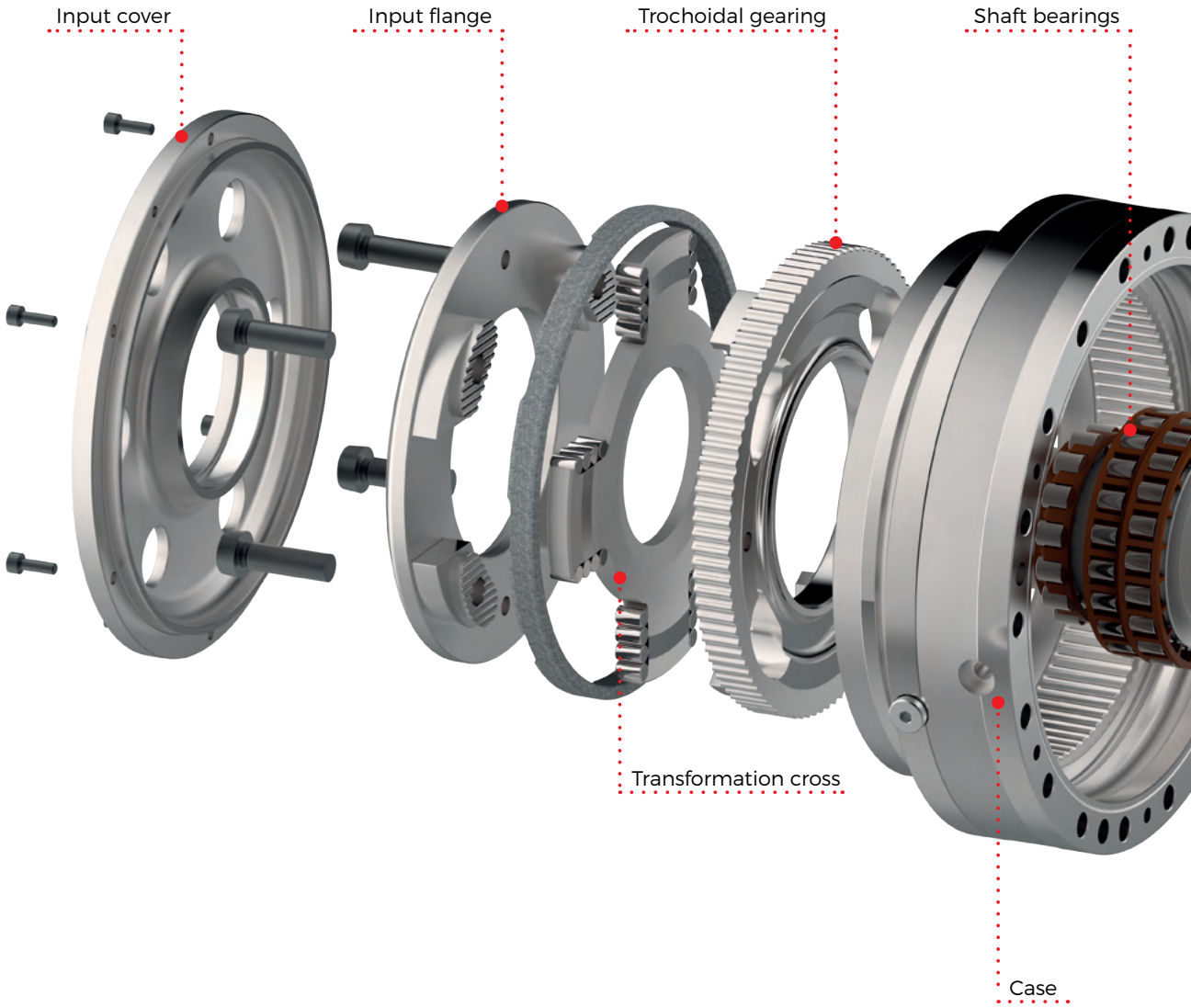

Fig. 1.a: TwinSpin® reduction gears components

SPINEA BY TIMKEN
Courtesy of Steven Engineering, Inc - (800) 258-9200 - sales@steveneng.com - www.stevenengineering.com

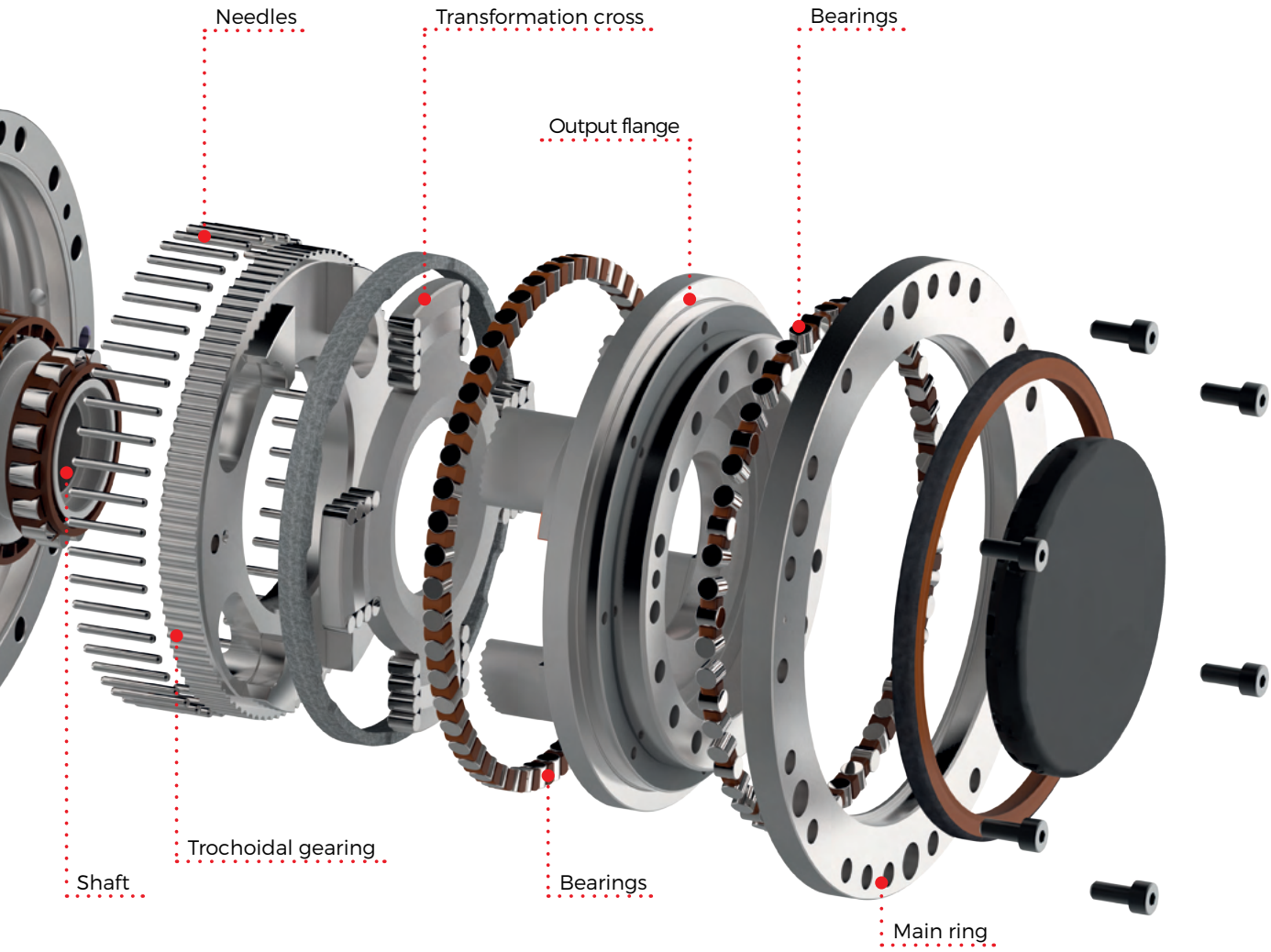
Needles
Transformation cross
Bearings
Output flange
Trochoidal gearing
Shaft
Bearings
Main ring

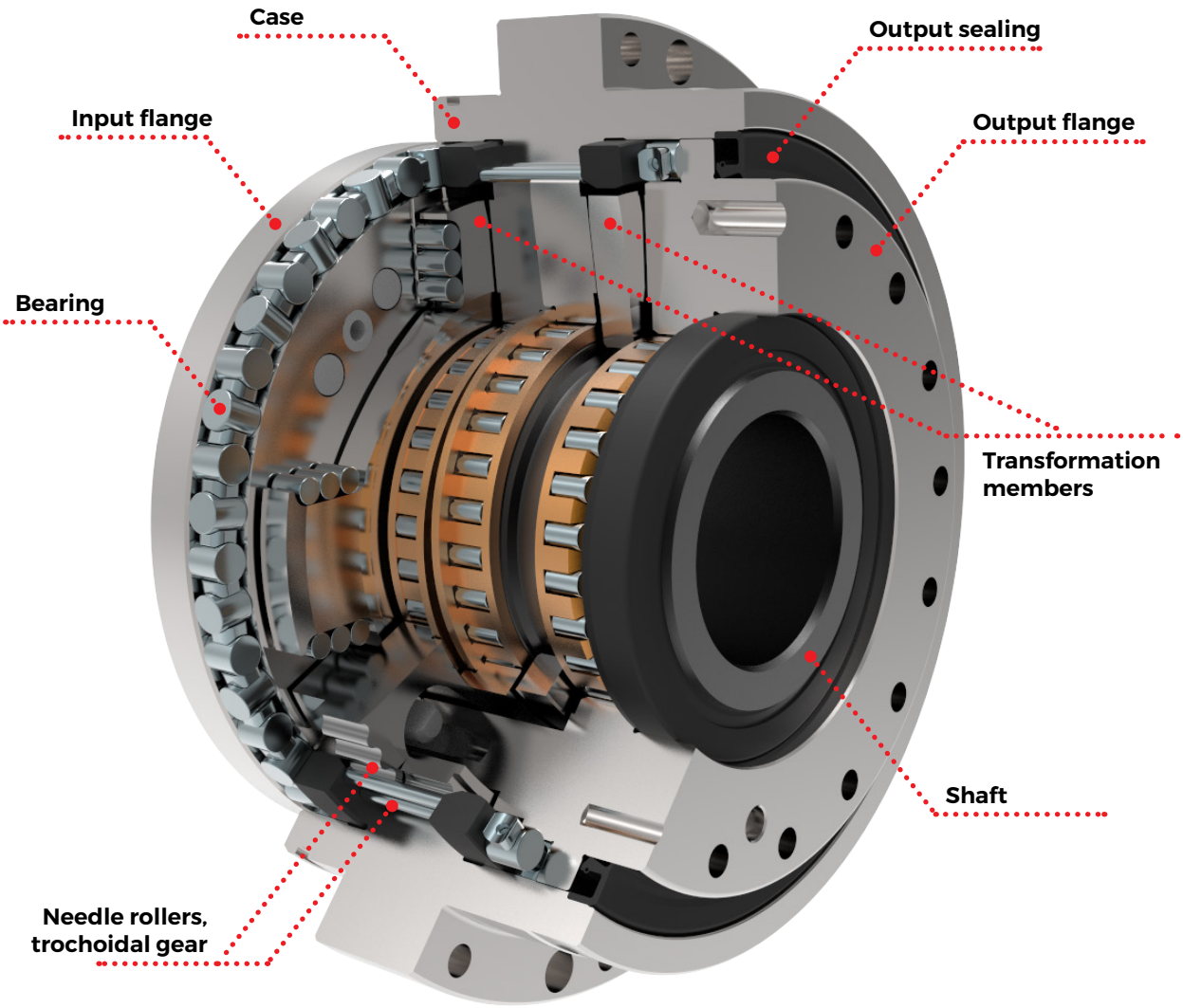

Fig. 1.b: TwinSpin® cross section

Output sealing
On the output flange side, it prevents from reduction gear internal contamination and lubricant leakage

Case
Incorporates the high capacity precision radial-axial output bearings integrated in the reduction gear.

Flanges
Input and output flanges are fixed together by fitted bolts and rotate at reduced speed in the radial-axial output bearing relative to the case.

Shaft
High-speed component of the reduction mechanism is carried by the roller bearings in the flanges. Bearing raceways are grounded directly on the shaft and the flanges. The shaft eccentrics rotationally support the trochoidal gears via roller bearings.

Trochoidal gearing
The trochoidal profile with almost 50 % simultaneous meshing ensures transmission of high torque and backlash-free performance of the reduction gear.

Transformation members
It transforms the planetary motion of the trochoidal gears to the rotary motion of a pair of flanges.

Courtesy of Steven Engineering, Inc - (800) 258-9200 - sales@steveneng.com - www.stevenengineering.com

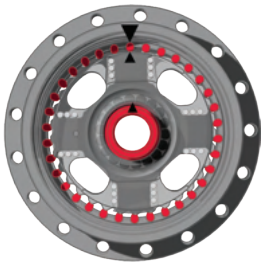

α=0°

The input shaft of the reduction gear is in zero point.

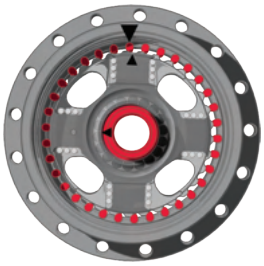

α=90°

Rotation of the input shaft by 90° causes the revolution of the cycloidal gear (1/4 of the cycloidal tooth spacing). Direction of the cycloidal gear rotation is opposite to the rotation of input shaft.

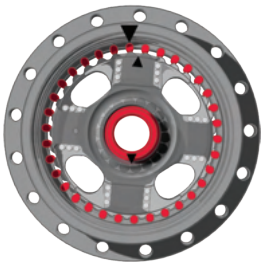

α=180°

Rotation of the input shaft by 180° causes the revolution of the cycloidal gear (2/4 of the cycloidal tooth spacing).

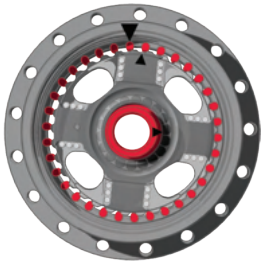

α=270°

Rotation of the input shaft by 270° causes the revolution of the cycloidal gear (3/4 of the cycloidal tooth spacing).

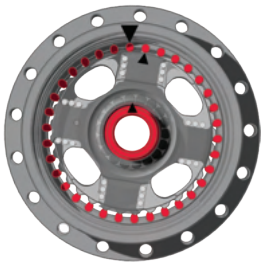

α=360°

Rotation of the input shaft by 360° causes the revolution of the cycloidal gear (4/4 of the cycloidal tooth spacing).

Fig. 1.1: Operating principle

Courtesy of Steven Engineering, Inc - (800) 258-9200 - sales@steveneng.com - www.stevenengineering.com

Advantages

The TwinSpin® high precision reduction gears meet the requirements of even the most demanding customers across all industrial fields. With optimal price-performance ratio they reliably ensure parameters such as high precision, compactness, high tilting as well as torsion stiffness, low weight, low vibrations or wide range of gear ratios.

Exceptional precision

With the utilization of our own patented design the reduction gears represent an unrivalled precise solution, while at the same time keeping a wide range of dimensions and gear ratios.

High overload capacity, long lifetime

The reduction gears are characterized by easy implementation and excellent tilting and torsional stiffness parameters. At the same time they ensure trouble-free operation with exceptionally low noise and vibrations at a wide range of application environment temperature ranges. They rely upon high resistance and overload capacity of the gearbox with integrated radial-axial bearings. Subsequently, your initial investment will project into maintenance cost saving during entire utilization time.

Uniquely balanced design

TwinSpin® represents an integration of high load carrying reduction gear with a unique reduction mechanism and high load carrying output bearings into a single compact unit. Small dimensions and first-class technical parameters ensure high utility value in an optimal performance, dimension and price ratio.

Technical support

Our professionally trained team of specialists is at your disposal in order to solve any issues. The use of first-rate materials and the manufacturing process are guaranteed by ISO 9000 certificates, and are a fundamental prerequisite of correct and reliable performance of our products.

Courtesy of Steven Engineering, Inc - (800) 258-9200 - sales@steveneng.com - www.stevenengineering.com

G SERIES

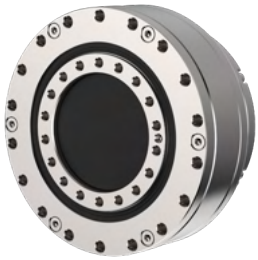

GH SERIES

T SERIES

E SERIES

H SERIES

M SERIES

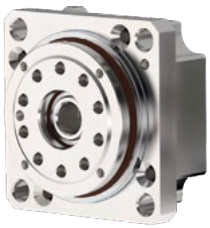

Robotics

6-axis robots, scara robots, portal robots, gantry robots

ABB product

Automation and service robotics

Service robotics, general automation, assembly equipment, rotary tables, welding positioners

*

Machine tools

Turning and milling machines, grinding machines, bending machines, cutting machines (water jet, laser, plasma, etc.) tool changers, pallet changers, rotary tables, cutting heads, wood-processing machines, marble and stone machines, rotary transfer machines.

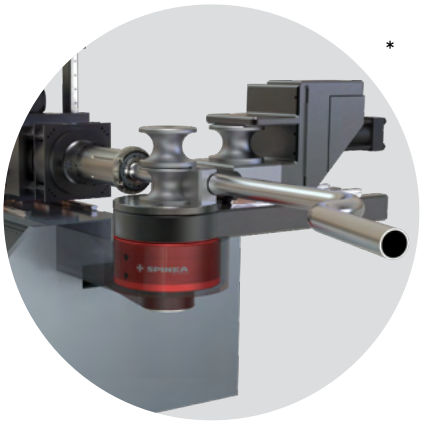

*

*Illustration image

SPINEA BY TIMKEN

Courtesy of Steven Engineering, Inc - (800) 258-9200 - sales@steveneng.com - www.stevenengineering.com

Navigation and security

Radars, navigation equipment, surveillance optoelectronic systems, security and defense equipment, simulation systems

*

Medical equipment

Surgical robots, radiosurgery devices, medical and rehabilitation devices, scanners, dental milling machines, other medical equipment

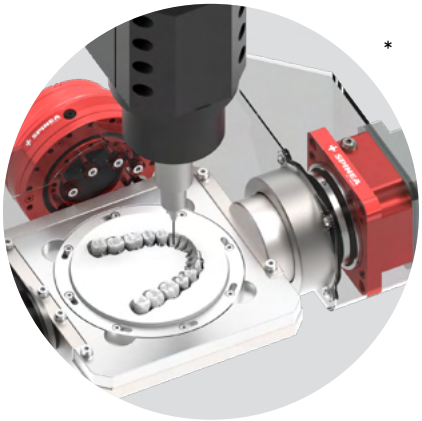

*

*

Other applications

Inspection, measuring and testing equipment, textile machines, packaging machines, semiconductor manufacturing, remote camera systems (film industry), calibration systems, rotary positioners in scientific projects

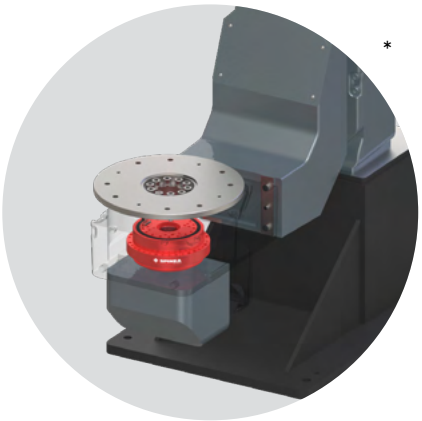

*

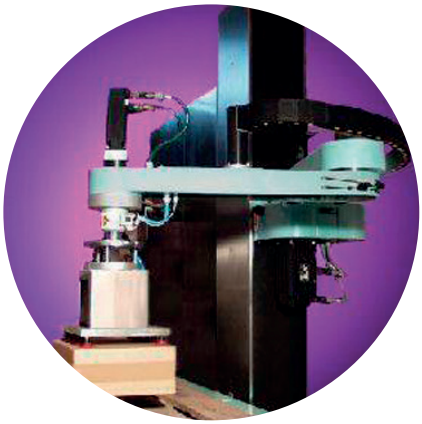

*Illustration image

Courtesy of Steven Engineering, Inc - (800) 258-9200 - sales@steveneng.com - www.stevenengineering.com

Courtesy of Steven Engineering, Inc - (800) 258-9200 - sales@steveneng.com - www.stevenengineering.com

TwinSpin®

G SERIES

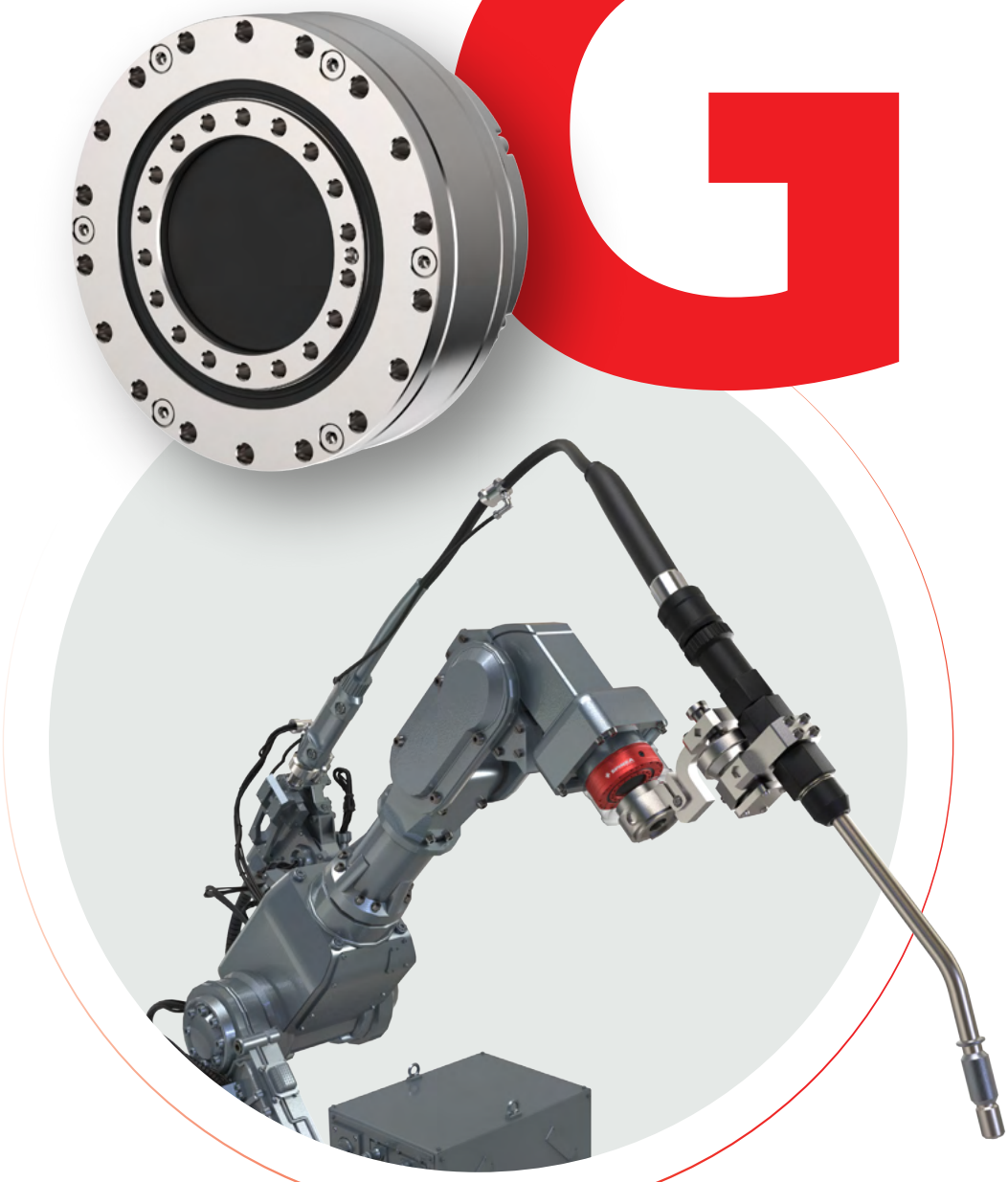

NEW GENERATION

TwinSpin® **G** SERIES IS EXCELLENT IN BOTH INDUSTRIAL ROBOTS AND MANY OTHERS

2.1 G SERIES

Advantages

- **high tilting stiffness**
- **low friction**
- **high precision output bearing**
- **high torque density**
- **reduced lost motion settings**
- **high torque overload capacity**

The **G series** a new generation of TwinSpin® high precision reduction gears with a new design of the main bearing and improved performance for the most demanding applications. G series introduced the increase in torque to weight ratio in comparison to the previous generation. Innovative design of main bearing resulted in the unprecedented tilting stiffness, high precision of the output bearing, and modularity of design which allows for customized solutions. Further improvements introduced with G series has yielded further friction reduction in transmission mechanism, lower hysteresis and low settings of Lost Motion, especially in small sizes. Finally, new sizes of reducers have been introduced with G series in standard and hollow shaft design to broaden the portfolio and application range of TwinSpin® reducers.

Tab. 2.1a: G series features

Case	Through holes in case
Input flange connection	The shaft sealing / adapter flange is offered in the following versions: a) motor connection flange b) sealed input cover c) without flange
Input shaft design	The input shaft is offered in the following versions: a) shaft with keyway b) based on special request
Installation and operation characteristics	Wider range of modular configurations

SPINEA BY TIMKEN
Courtesy of Steven Engineering, Inc - (800) 258-9200 - sales@steveneng.com - www.stevenengineering.com

Tab. 2.1b: G series ordering specifications

TS - 225 - 55 G P24

Name	Size	Ratio	Series version	Shaft version	
				P (DIN 6885)	S
TS	065	**35**, **47**, **63**	G	6	•
	075	41, **63**, 75	G	9	•
	085	**33, 63, 79**	G	11	•
	095	43, 73, **95**	G	14	•
	115	**43**, 69, 123	G	14	•
	135	35, **97**, 135	G	19	•
	155	53, **109**, 133	G	19	•
	185	**57**, **67**, **117**, 139	G	24	•
	225	**55**, 69, **137**	G	24	•

Note: An example of ordering code of a modified TwinSpin® G series reduction gear with a motor flange:
TS225 – 55 –G– P24 – M235 – P231. The markings M235 and P231 for a specific modification are defined by the manufacturer.

Shaft version

P Shaft with a keyway

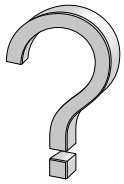

S Special shaft

Note: Drawings show maximum possible size of key-way applicable in each size of TwinSpin® reducer.

Courtesy of Steven Engineering, Inc - (800) 258-9200 - sales@steveneng.com - www.stevenengineering.com

Tab. 2.1c: G series rating table

Size	Reduction ratio	Rated output torque	Max. acceleration / deceleration torque	Maximum permissible torque at emergency / E-stop	Rated input speed	Maximum input speed 9)	Lost motion	Hysteresis	Angular transmission error 6)	No-load starting torque (max.) 8) 11)
	i	T_R [Nm]	T_{acc} [Nm]	T_{em} [Nm]	n_R [rpm]	n_{max} [rpm]	LM [arcmin]	H [arcmin]	ATE [arcsec]	[Nm]
TS 065	**35**	31	62	155	2 000	4 500	<1	<1	75	0.10
	47					4 700				0.08
	63					5 200				0.07
TS 075	41	35	70	175	2 000	4 800	<1	<1	72	0.10
	63					5 000				0.08
	75					5 400				0.08
TS 085	**33**	75	150	375	2 000	4 400	<1	<1	72	0.25
	63					4 800				0.20
	79					5 000				0.20
TS 095	43	85	170	425	2 000	4 000	<1	<1	72	0.30
	73					4 500				0.20
	95					4 800				0.20
TS 115	**43**	173	346	865	2 000	4 200	<1	<1	60	0.40
	69					4 300				0.25
	123					4 800				0.20
TS 135	35	250	625	1 250	2 000	3 600	<1	<1	72	0.35
	97					4 200			42	0.25
	135					4 500			– 10)	0.25
TS 155	53	460	1 150	2 300	2 000	3 400	<1	<1	40	0.50
	109					3 800				0.45
	133					4 200				0.40
TS 185	**57**	780	1 950	3 900	2 000	3 500	<1	<1	30	0.90
	67					3 700				0.90
	117					4 300				0.60
	139					4 400				0.60
TS 225	**55**	1 270	3 175	6 350	2 000	3 200	<1	<1	30	1.00
	69					3 400				1.00
	137					4 000				0.80

RIGHT TO CHANGE WITHOUT PRIOR NOTICE RESERVED

1) Mean statistical value. For further information see chapter Torsion stiffness, Tilting stiffness.
2) Load at output speed 15 rpm and L_{10} = 12 000 hrs.
3) Moment M_c value for $F_a = 0$. If $F_a \neq 0$, see chapter 3.5.
4) Axial force $F_{a\,max}$ value for $M_c = 0$. If $M_c \neq 0$ see chapter 3.5.
5) The parameter depends on the high precision reduction gear version.
6) The parameter depends on the version of the high precision reduction gear, ratio and lost motion.
7) The parameter values are informative. Exact value depends on the specific version of the high precision reduction gear.
8) Temperatures of the high precision reduction gear lower than 20°C will cause higher no-load starting or back driving torque.
9) Instantaneous speed peak that may occur within the working cycle.
10) For more information please contact the SPINEA® sales department.
11) Valid for unsealed version of the high precision reduction gear.

SPINEA BY TIMKEN

Courtesy of Steven Engineering, Inc - (800) 258-9200 - sales@steveneng.com - www.stevenengineering.com

G SERIES

Tab. 2.1c: G series rating table - continued

Size	Reduction ratio	Max. backdriving torque 8)	Torsional stiffness 50 – 100 % T_R 1) 6)	Tilting stiffness 1) 5)	Rated moment 2) 3)	Allowable moment	Allowable radial force 2)	Allowable axial force 2) 4)	Input inertia 7)	Weight 7)
	i	[Nm]	k_t [Nm/arcmin]	M_t [Nm/arcmin]	M_c [Nm]	M_{cmax} [Nm]	F_{rR} [kN]	$F_{a\,max}$ [kN]	I [10^{-4} kgm²]	m [kg]
TS 065	**35**	3	3.8	40	68	136	1.7	5.3	0.0074	0.714
	47	4	4							
	63	5	4.1							
TS 075	41	5	8.1	70	87	174	1.8	5.7	0.019	0.95
	63	8	8.2							
	75	10	8.4							
TS 085	**33**	5	9.5	90	168	336	3.2	10.2	0.034	1.7
	63	15	10.8							
	79	20	10.8							
TS 095	43	20	15	120	205	410	3.5	11.1	0.14	1.9
	73	27	15.3							
	95	38	15.5							
TS 115	**43**	18	31	220	280	560	4	12.5	0.29	3.2
	69	30	31							
	123	42	32							
TS 135	35	10	42	420	500	1 000	5.8	18.1	0.67	4.7
	97	12	50							
	135	– *10)	53							
TS 155	53	50	85	900	820	1 640	8.3	26.1	0.96	7.4
	109	80	88							
	133	115	90							
TS 185	**57**	85	147	1 300	1 700	3 400	13.9	43	1.98	12.8
	67	90	148							
	117	120	150							
	139	135	152							
TS 225	**55**	60	258	2 300	2 190	4 380	15.2	47.4	3.2	21.6
	69	80	300							
	137	230	308							

IMPORTANT NOTES:

- Load values in the table are valid for the nominal life of L_{10} = 6 000 [Hrs]..
- High precision reduction gears are preferred for intermittent cycles (S3-S8); the output speed in applications is an inverted variable.
- The continuous mode cycle (S1) should needed to be consulted with the manufacturer.
- If the output speed in application is below than 0,1 rpm please consult with the manufacturer.
- The values in the table refer to nominal operating temperature.
- Please note the temperature on the gear case that should not exceed 60°C.

The ratios highlighted in bold are recommended by SPINEA® as optimal versions in terms of price and delivery.

Courtesy of Steven Engineering, Inc - (800) 258-9200 - sales@steveneng.com - www.stevenengineering.com

TS 065 – i – G – P6

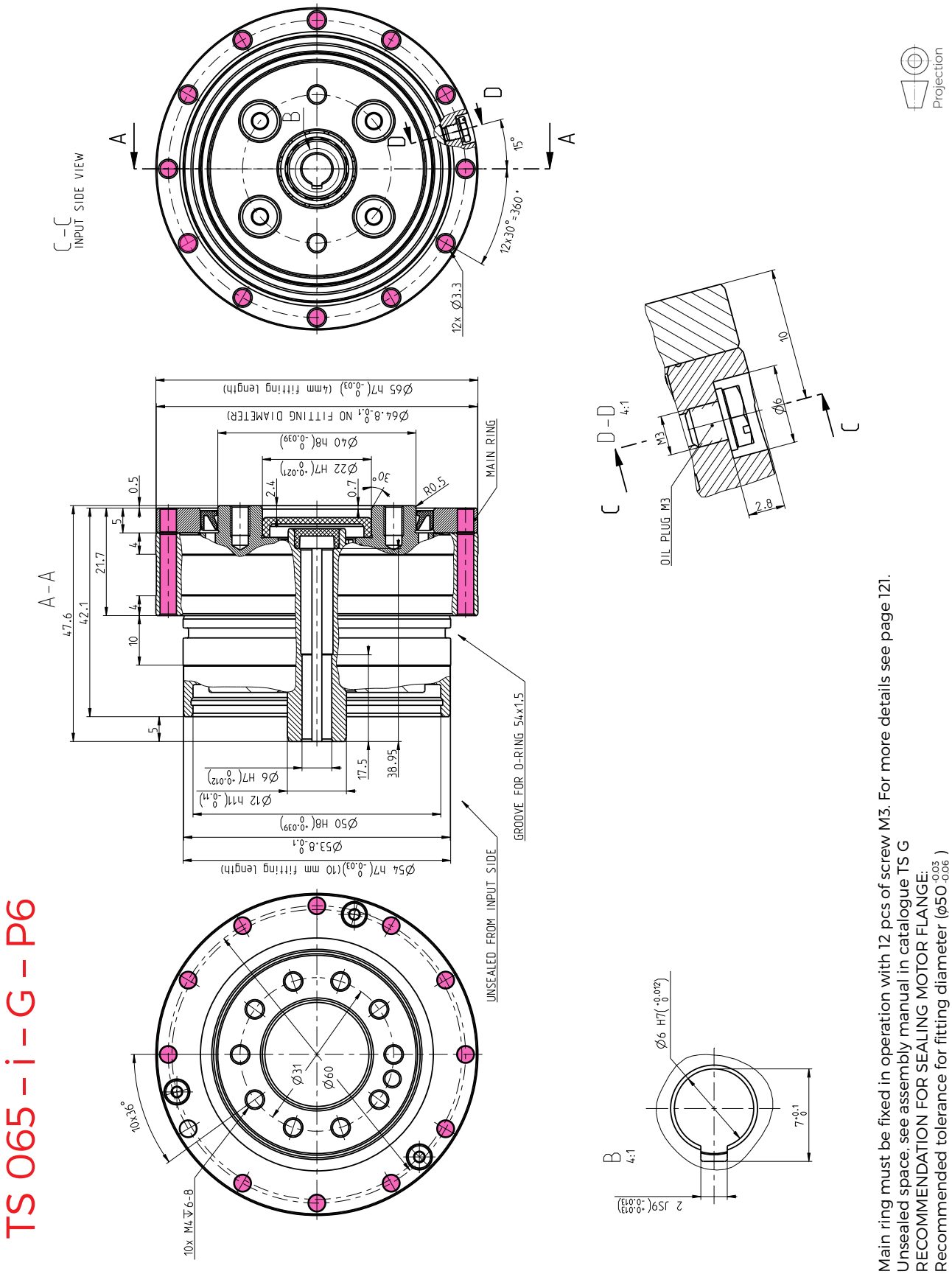

1. Main ring must be fixed in operation with 12 pcs of screw M3. For more details see page 121.
2. Unsealed space, see assembly manual in catalogue TS G
   RECOMMENDATION FOR SEALING MOTOR FLANGE:
   Recommended tolerance for fitting diameter ($\phi 50^{-0.03}_{-0.06}$)

SPINEA BY TIMKEN
Courtesy of Steven Engineering, Inc - (800) 258-9200 - sales@steveneng.com - www.stevenengineering.com

TS 075 – i – G – P9

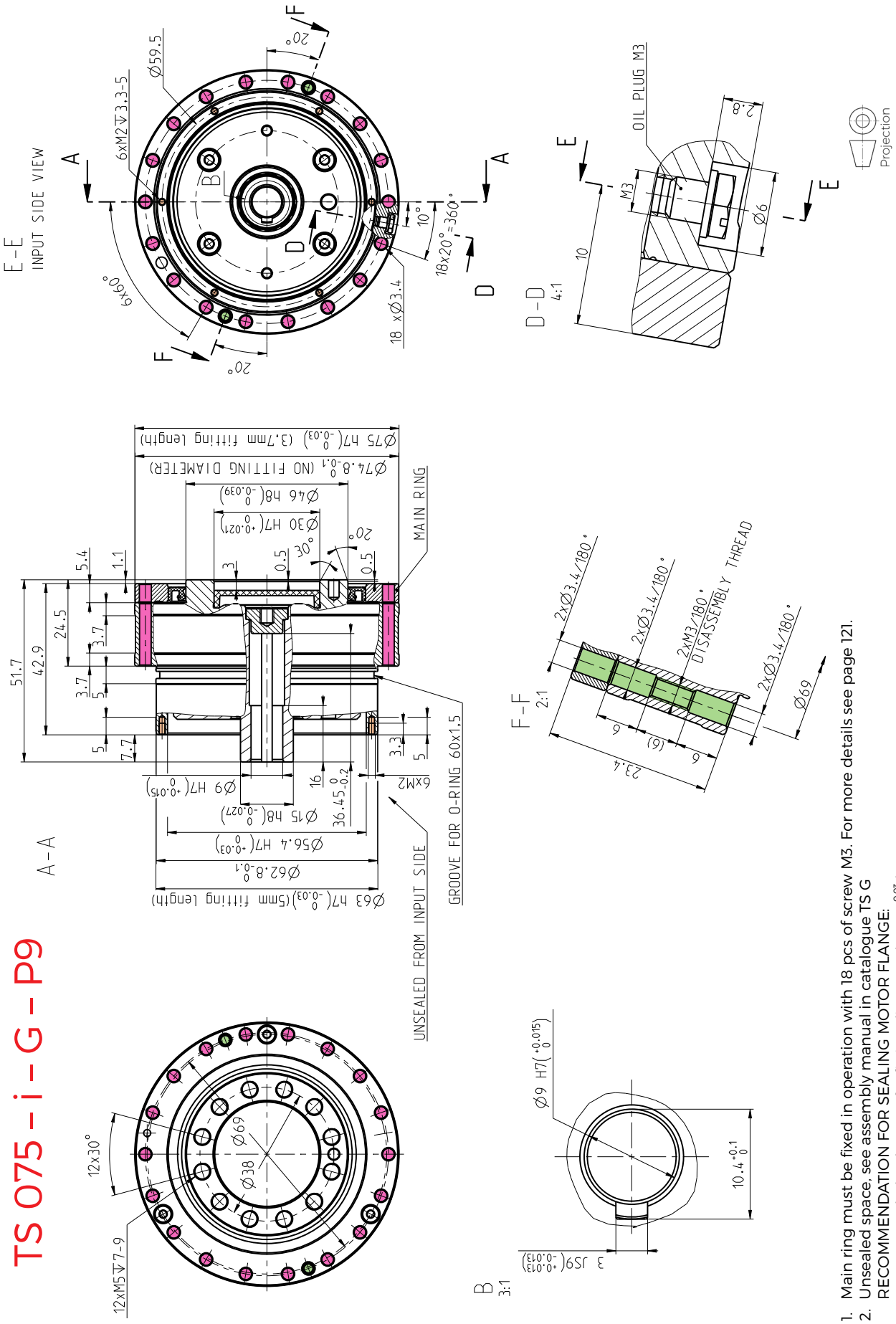

TS 075 – i – G – P9

1. Main ring must be fixed in operation with 18 pcs of screw M3. For more details see page 121.
2. Unsealed space, see assembly manual in catalogue TS G
   RECOMMENDATION FOR SEALING MOTOR FLANGE:
   Recommended tolerance for fitting diameter ($\phi 56.4^{-0.03}_{-0.06}$)

Courtesy of Steven Engineering, Inc - (800) 258-9200 - sales@steveneng.com - www.stevenengineering.com

TS 085 – i – G – P11

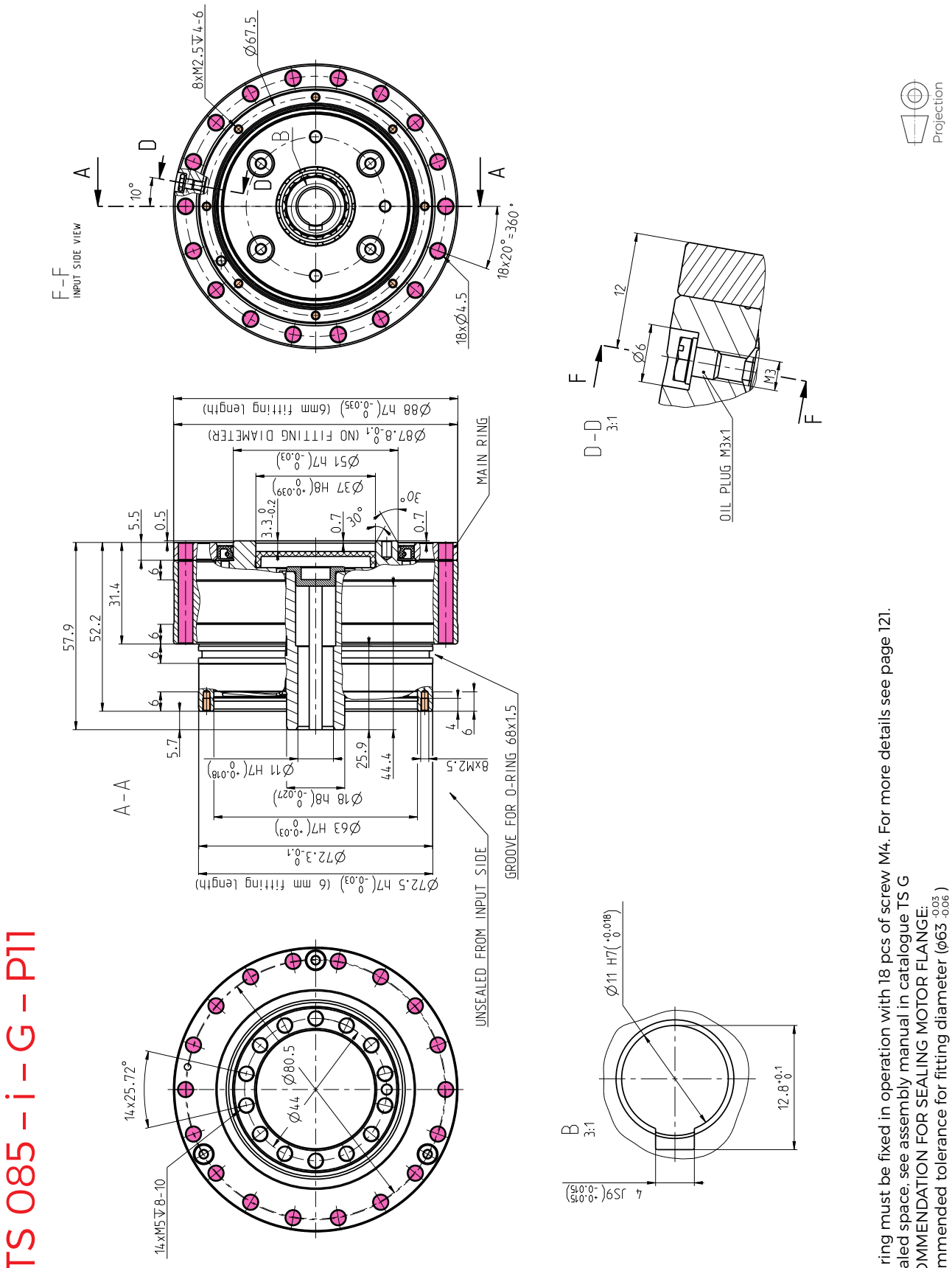

1. Main ring must be fixed in operation with 18 pcs of screw M4. For more details see page 121.
2. Unsealed space, see assembly manual in catalogue TS G
   RECOMMENDATION FOR SEALING MOTOR FLANGE:
   Recommended tolerance for fitting diameter ($\varnothing 63^{-0.03}_{-0.06}$)

SPINEA BY TIMKEN
Courtesy of Steven Engineering, Inc - (800) 258-9200 - sales@steveneng.com - www.stevenengineering.com

TS 095 – i – G – P14

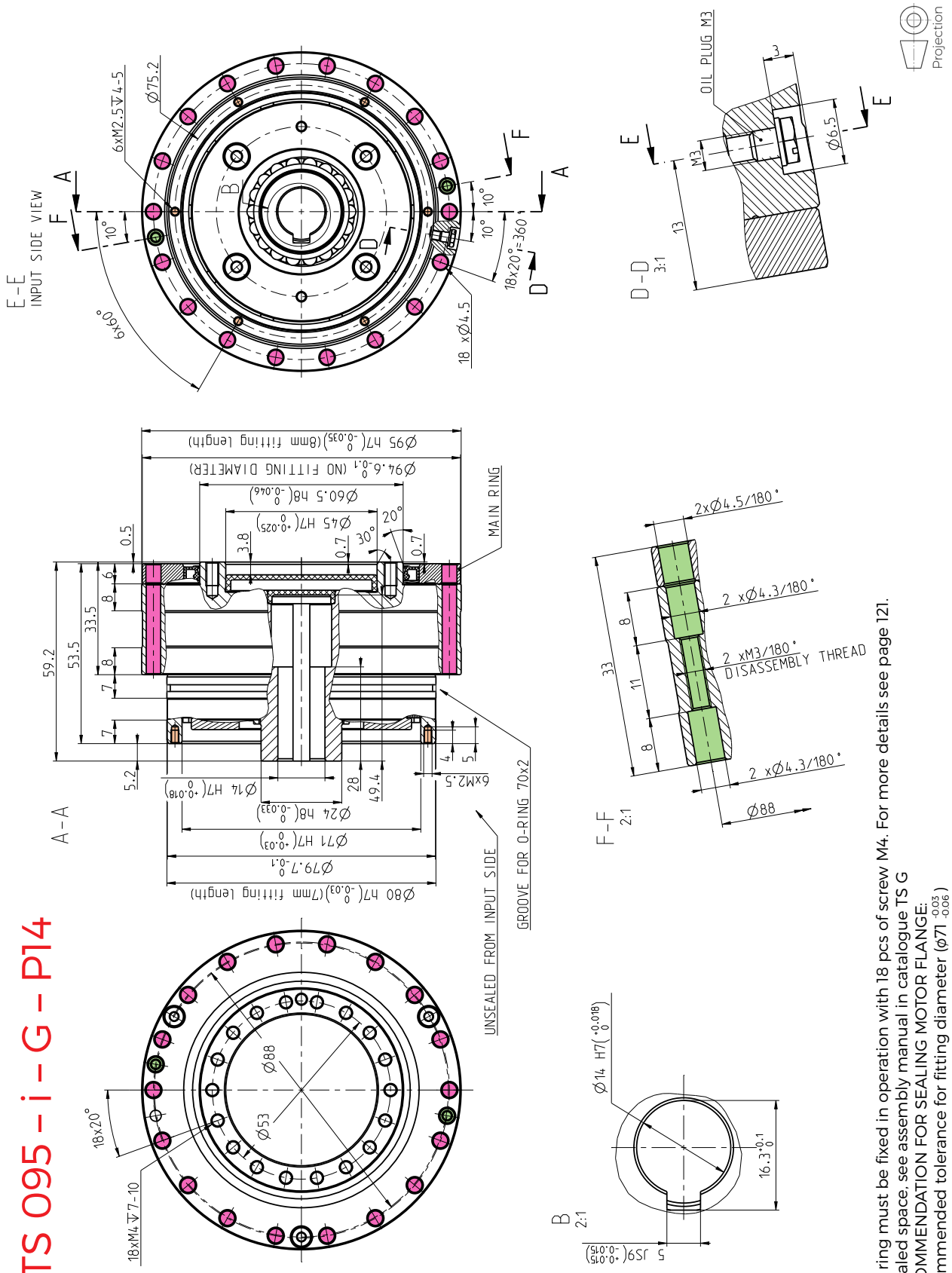

1. Main ring must be fixed in operation with 18 pcs of screw M4. For more details see page 121.
2. Unsealed space, see assembly manual in catalogue TS G
   RECOMMENDATION FOR SEALING MOTOR FLANGE:
   Recommended tolerance for fitting diameter (ø71 $^{0.03}_{0.06}$)

SPINEA BY TIMKEN
Courtesy of Steven Engineering, Inc - (800) 258-9200 - sales@steveneng.com - www.stevenengineering.com

TS 115 – i – G – P14

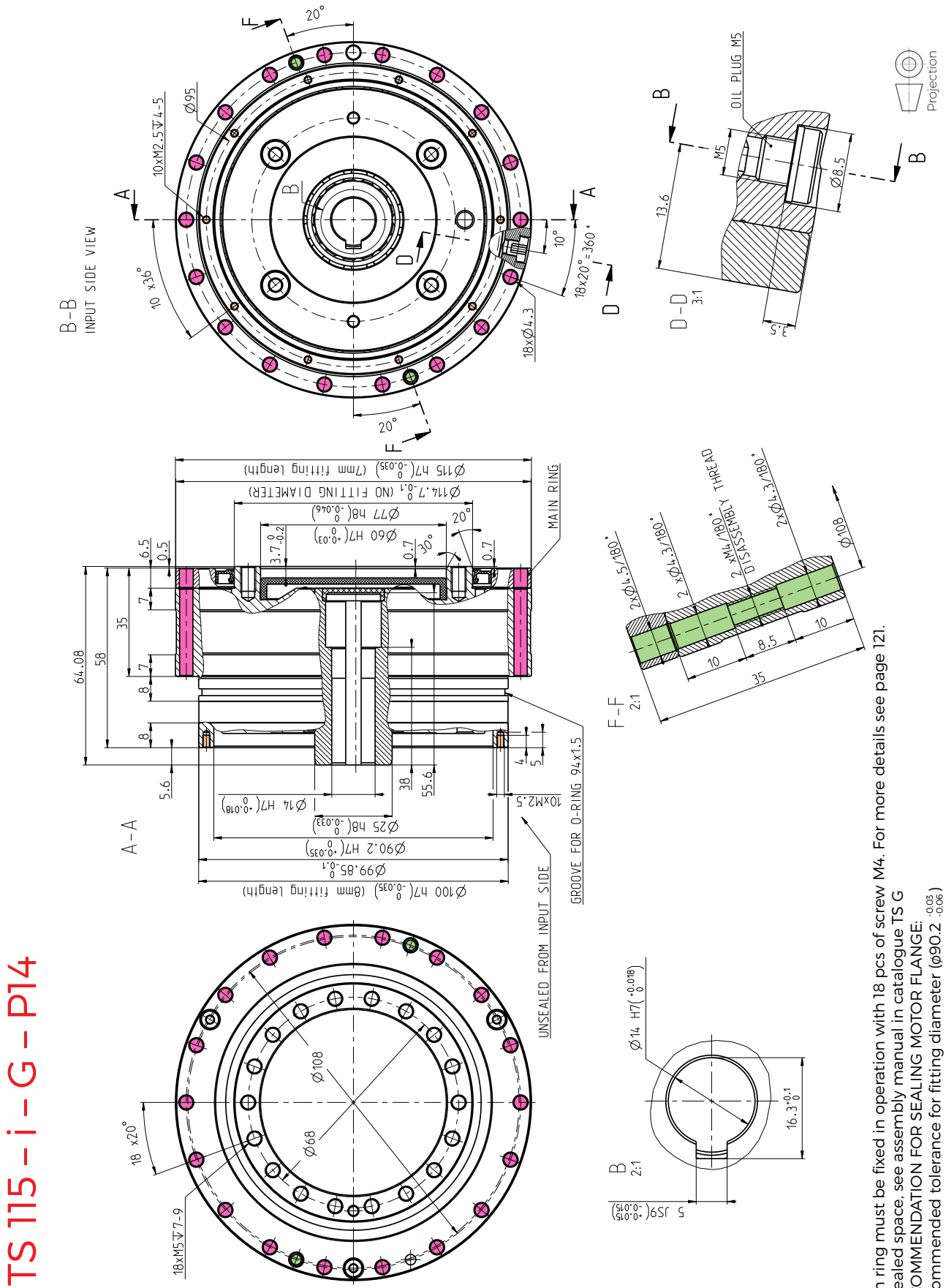

1. Main ring must be fixed in operation with 18 pcs of screw M4. For more details see page 121.
2. Unsealed space, see assembly manual in catalogue TS G
   RECOMMENDATION FOR SEALING MOTOR FLANGE:
   Recommended tolerance for fitting diameter (ø90.2 -0.03 -0.06)

SPINEA BY TIMKEN
Courtesy of Steven Engineering, Inc - (800) 258-9200 - sales@steveneng.com - www.stevenengineering.com

TS 135 – i – G – P19

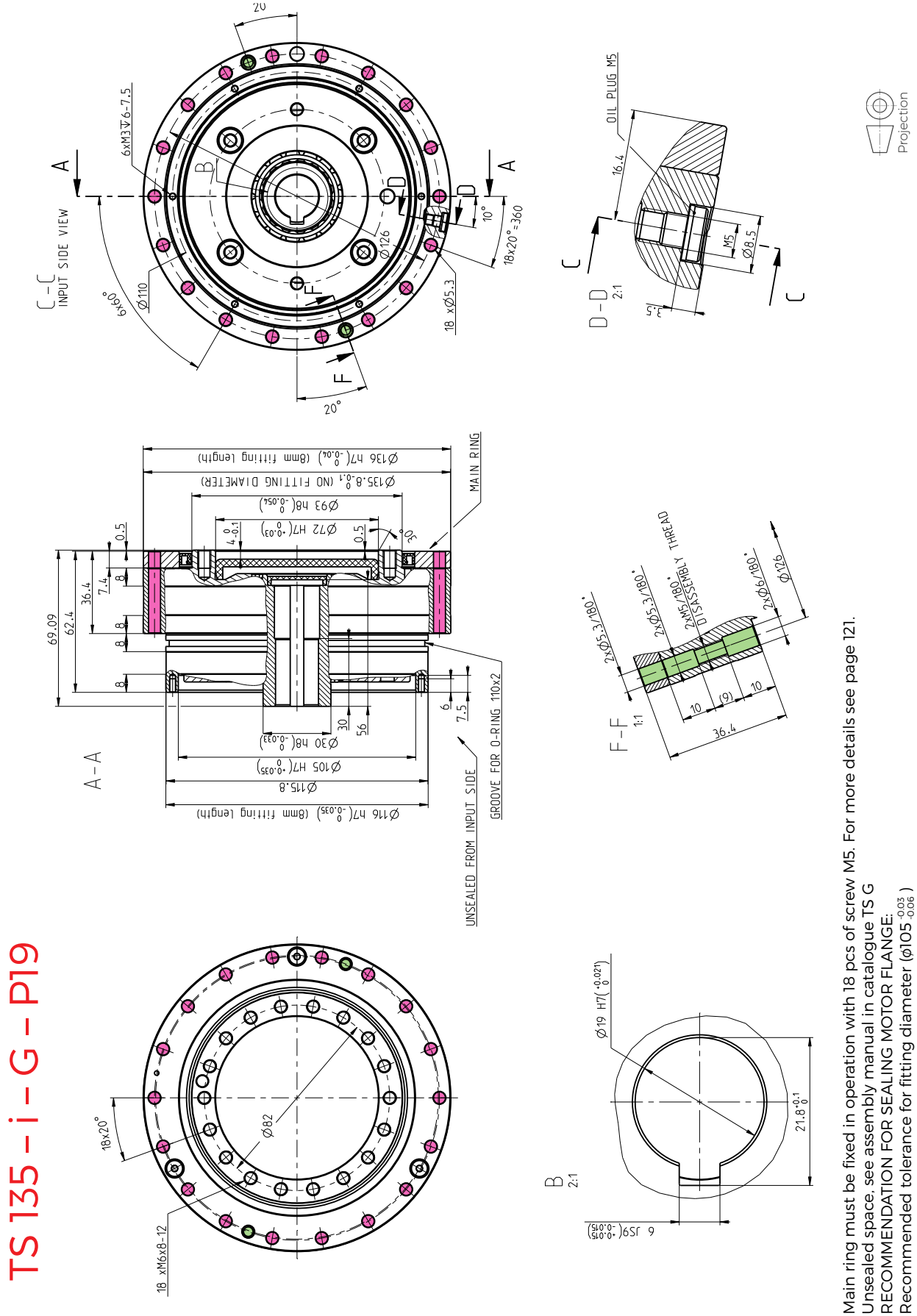

1. Main ring must be fixed in operation with 18 pcs of screw M5. For more details see page 121.
2. Unsealed space, see assembly manual in catalogue TS G
   RECOMMENDATION FOR SEALING MOTOR FLANGE:
   Recommended tolerance for fitting diameter (ø105 $^{+0.03}_{-0.06}$)

Courtesy of Steven Engineering, Inc - (800) 258-9200 - sales@steveneng.com - www.stevenengineering.com

TS 155 – i – G – P19

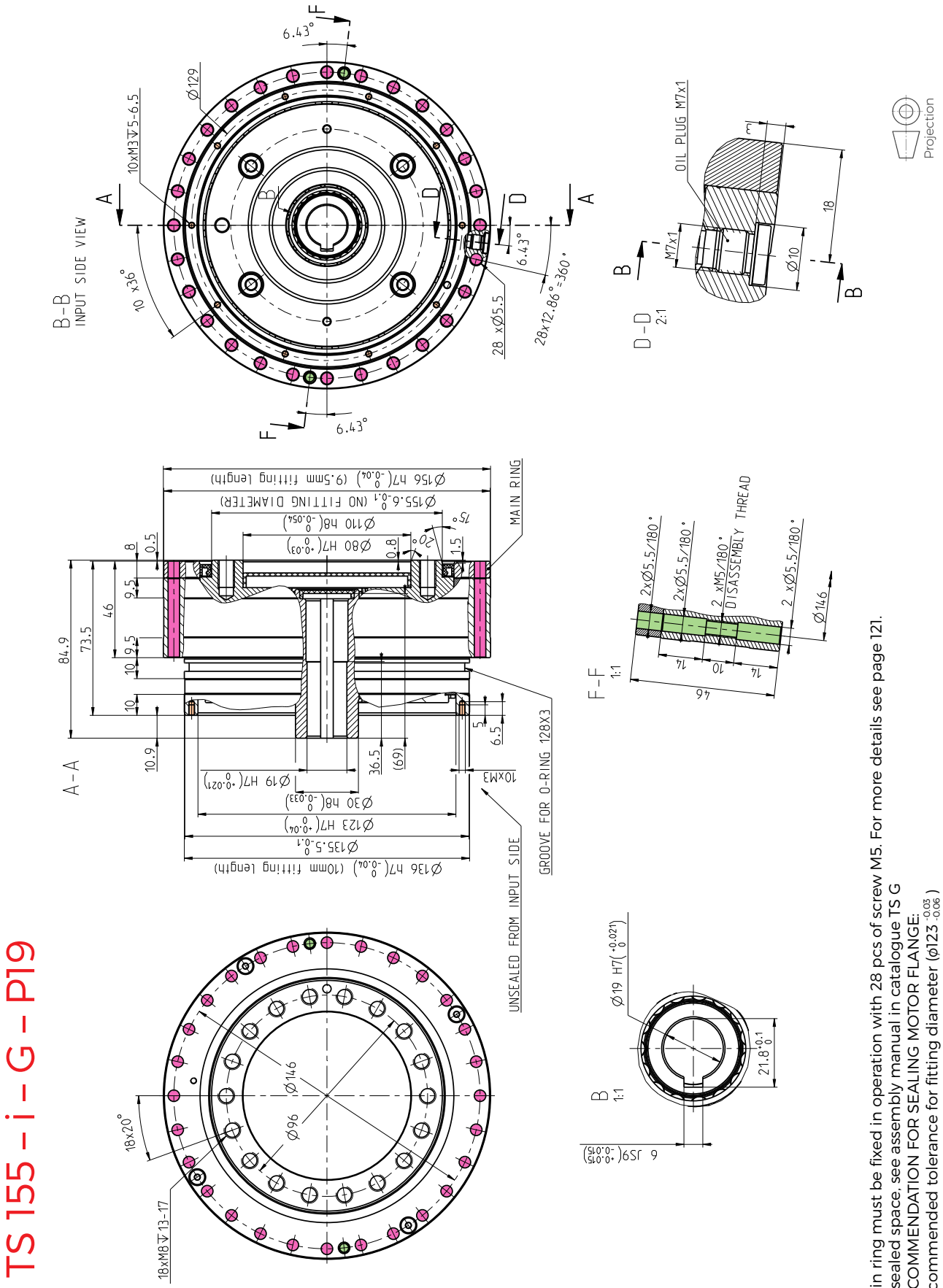

TS 155 – i – G – P19

1. Main ring must be fixed in operation with 28 pcs of screw M5. For more details see page 121.
2. Unsealed space, see assembly manual in catalogue TS G
   RECOMMENDATION FOR SEALING MOTOR FLANGE:
   Recommended tolerance for fitting diameter (ø123 $^{-0.03}_{-0.06}$)

SPINEA BY TIMKEN
Courtesy of Steven Engineering, Inc - (800) 258-9200 - sales@steveneng.com - www.stevenengineering.com

TS 185 – i – G – P24

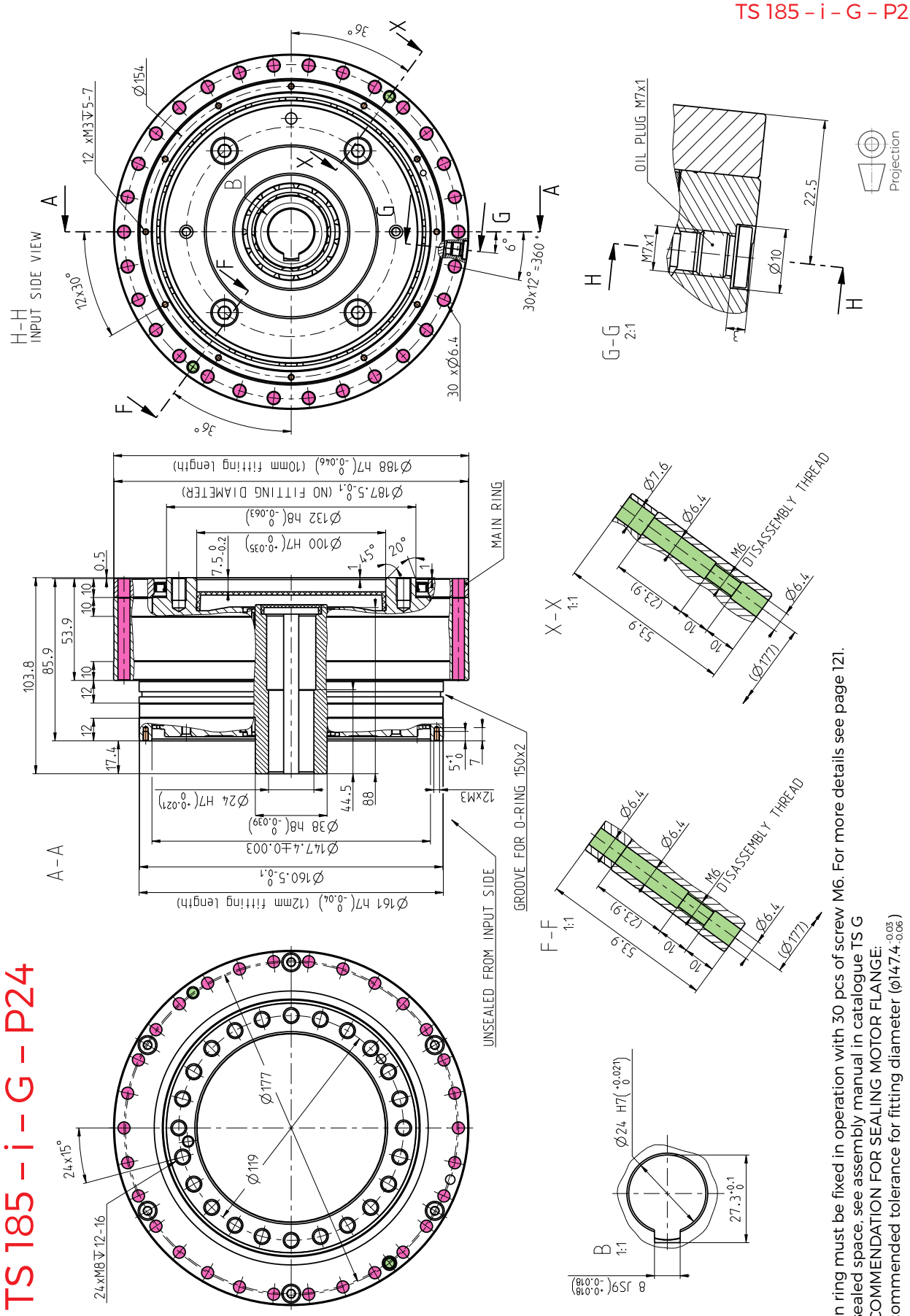

1. Main ring must be fixed in operation with 30 pcs of screw M6. For more details see page 121.
2. Unsealed space, see assembly manual in catalogue TS G
   RECOMMENDATION FOR SEALING MOTOR FLANGE:
   Recommended tolerance for fitting diameter ($\phi 147.4^{-0.03}_{-0.06}$)

Courtesy of Steven Engineering, Inc - (800) 258-9200 - sales@steveneng.com - www.stevenengineering.com

TS 225 – i – G – P24

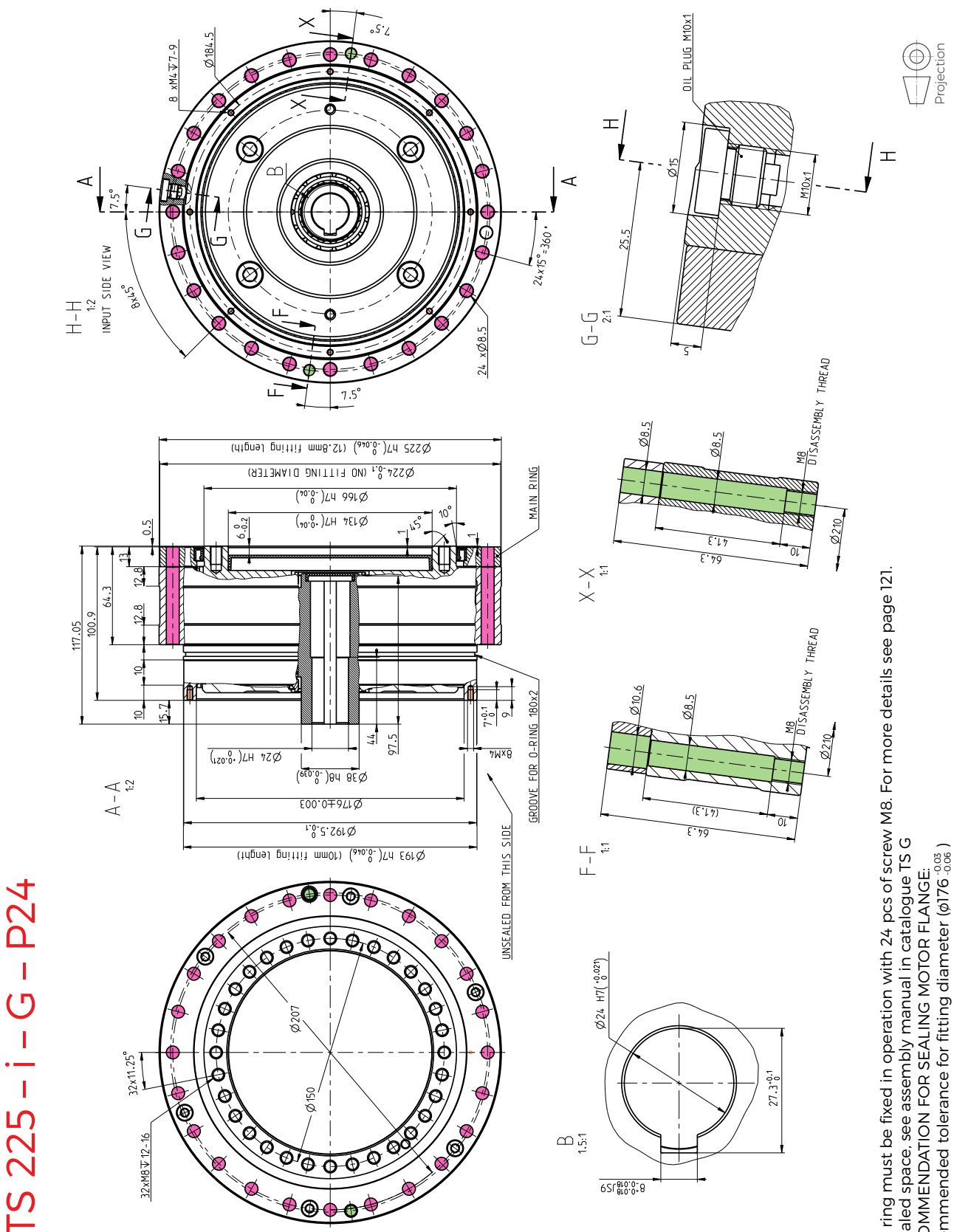

1. Main ring must be fixed in operation with 24 pcs of screw M8. For more details see page 121.
2. Unsealed space, see assembly manual in catalogue TS G
   RECOMMENDATION FOR SEALING MOTOR FLANGE:
   Recommended tolerance for fitting diameter (ø176 $^{-0.03}_{-0.06}$)

SPINEA BY TIMKEN

Courtesy of Steven Engineering, Inc - (800) 258-9200 - sales@steveneng.com - www.stevenengineering.com

Courtesy of Steven Engineering, Inc - (800) 258-9200 - sales@steveneng.com - www.stevenengineering.com

TS 065 – i – G – P6
SEALED

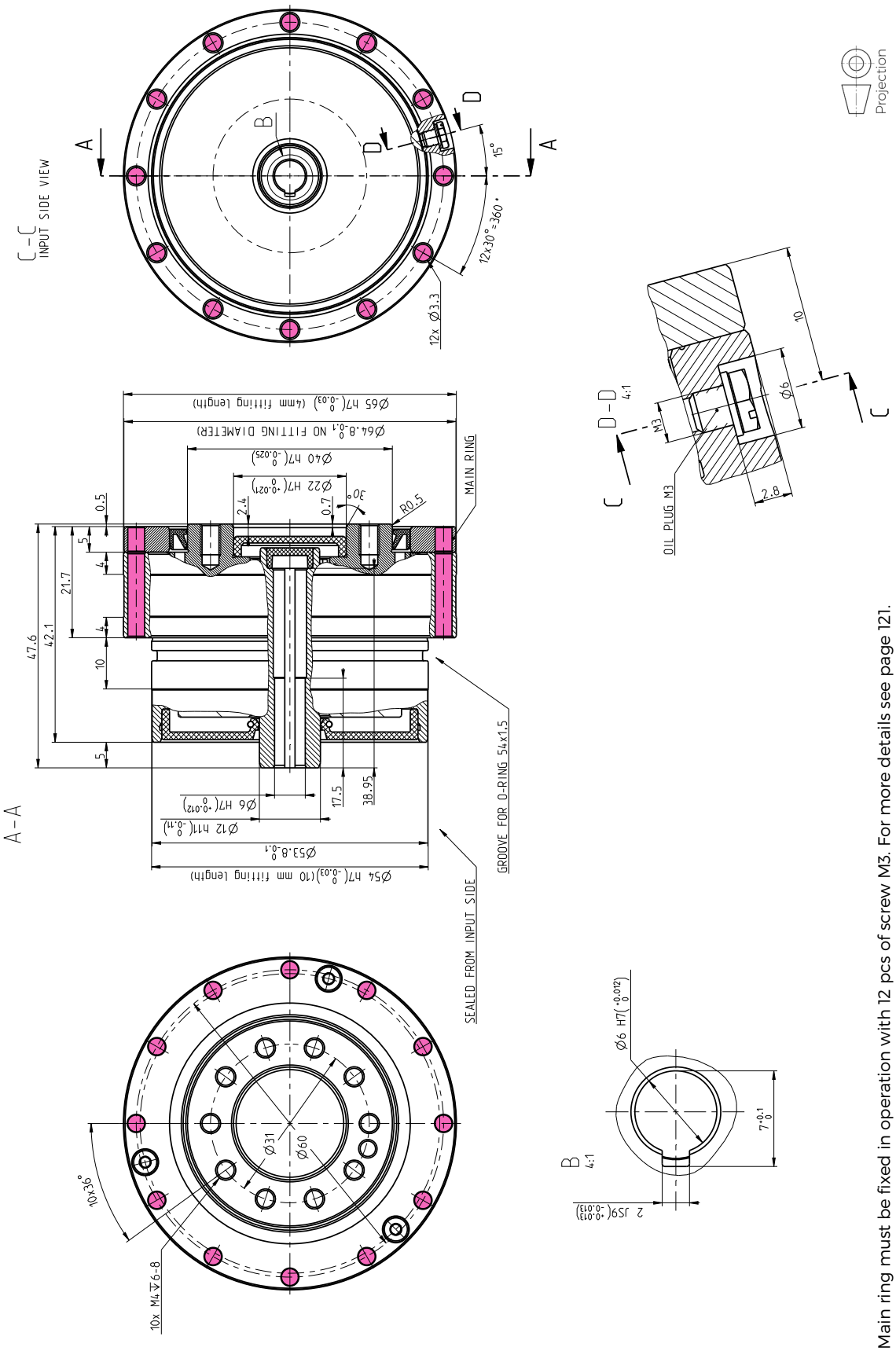

TS 065 – i – G – P6
SEALED

1. Main ring must be fixed in operation with 12 pcs of screw M3. For more details see page 121.

SPINEA BY TIMKEN
Courtesy of Steven Engineering, Inc - (800) 258-9200 - sales@steveneng.com - www.stevenengineering.com

TS 075 – i – G – P9
SEALED

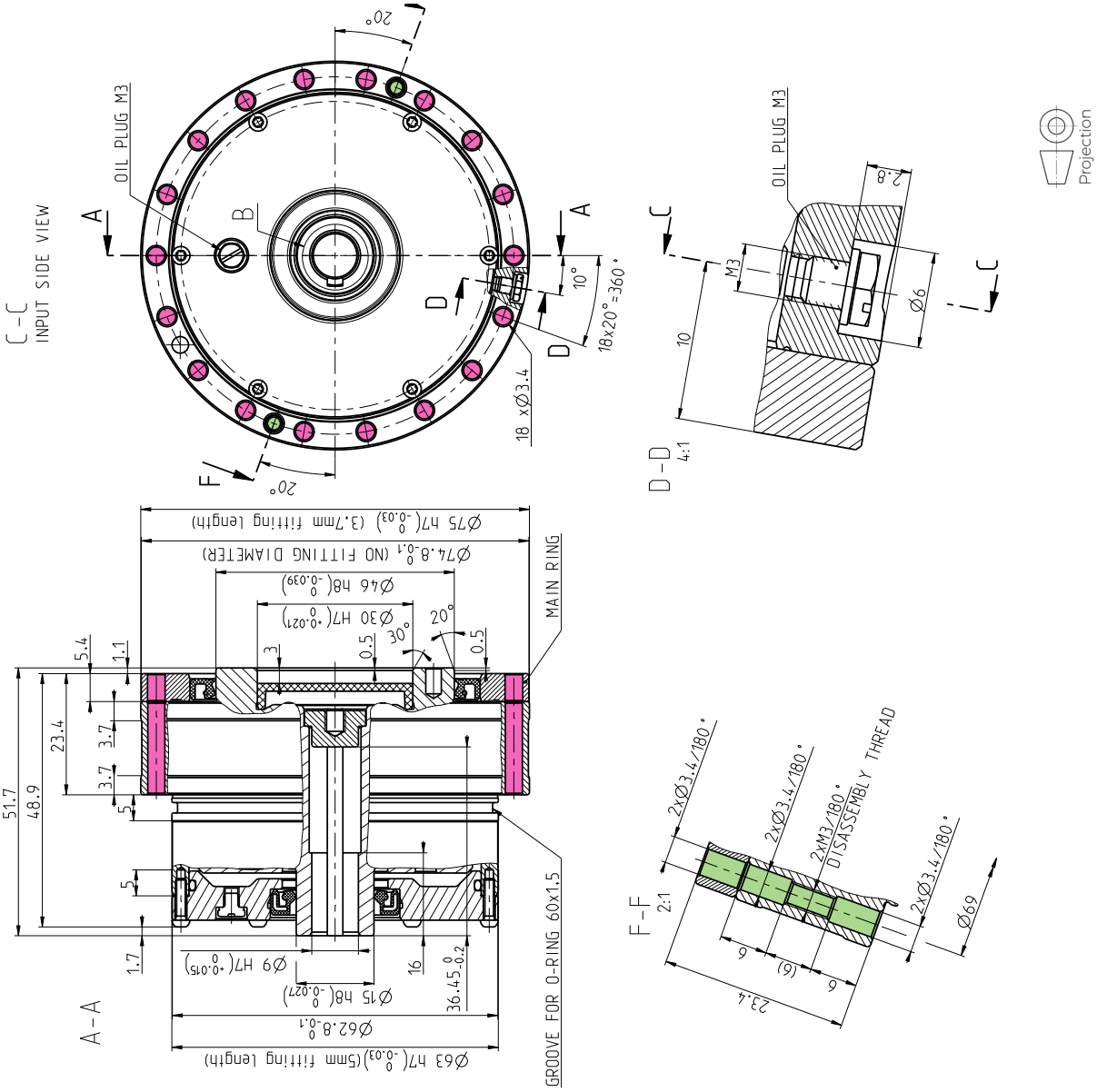

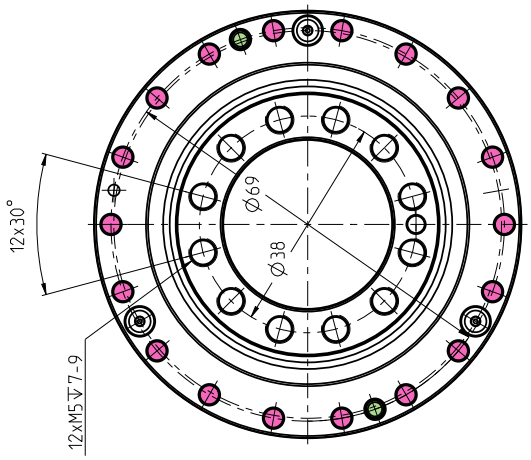

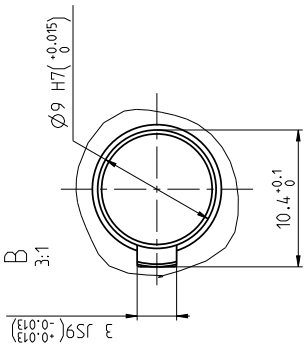

TS 075 – i – G – P9
SEALED

1. Main ring must be fixed in operation with 18 pcs of screw M3. For more details see page 121.

Courtesy of Steven Engineering, Inc - (800) 258-9200 - sales@steveneng.com - www.stevenengineering.com

TS 085 – i – G – P11
SEALED

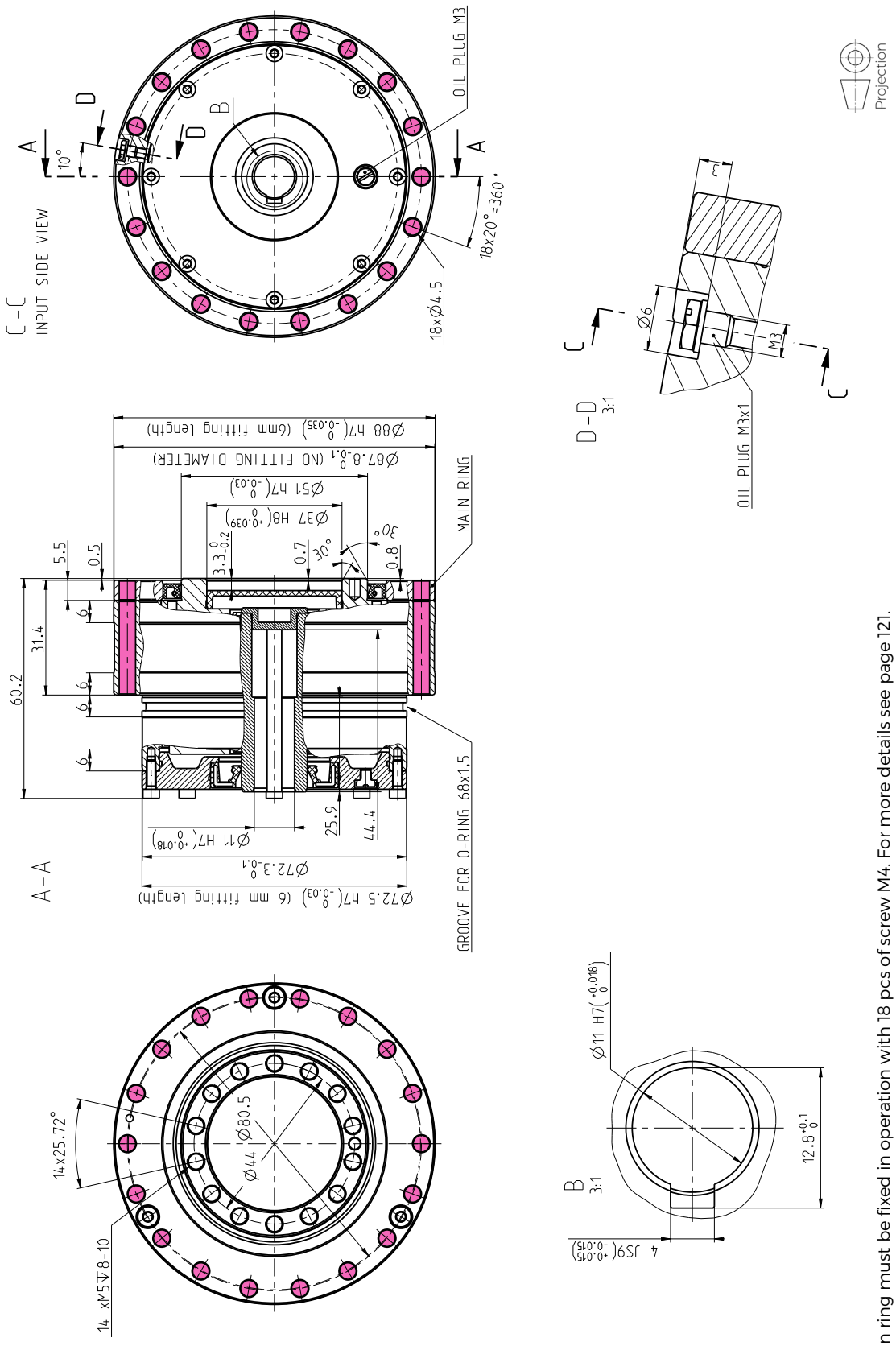

1. Main ring must be fixed in operation with 18 pcs of screw M4. For more details see page 121.

TS 085 – i – G – P11
SEALED

SPINEA BY TIMKEN
Courtesy of Steven Engineering, Inc - (800) 258-9200 - sales@steveneng.com - www.stevenengineering.com

TS 095 – i – G – P14
SEALED

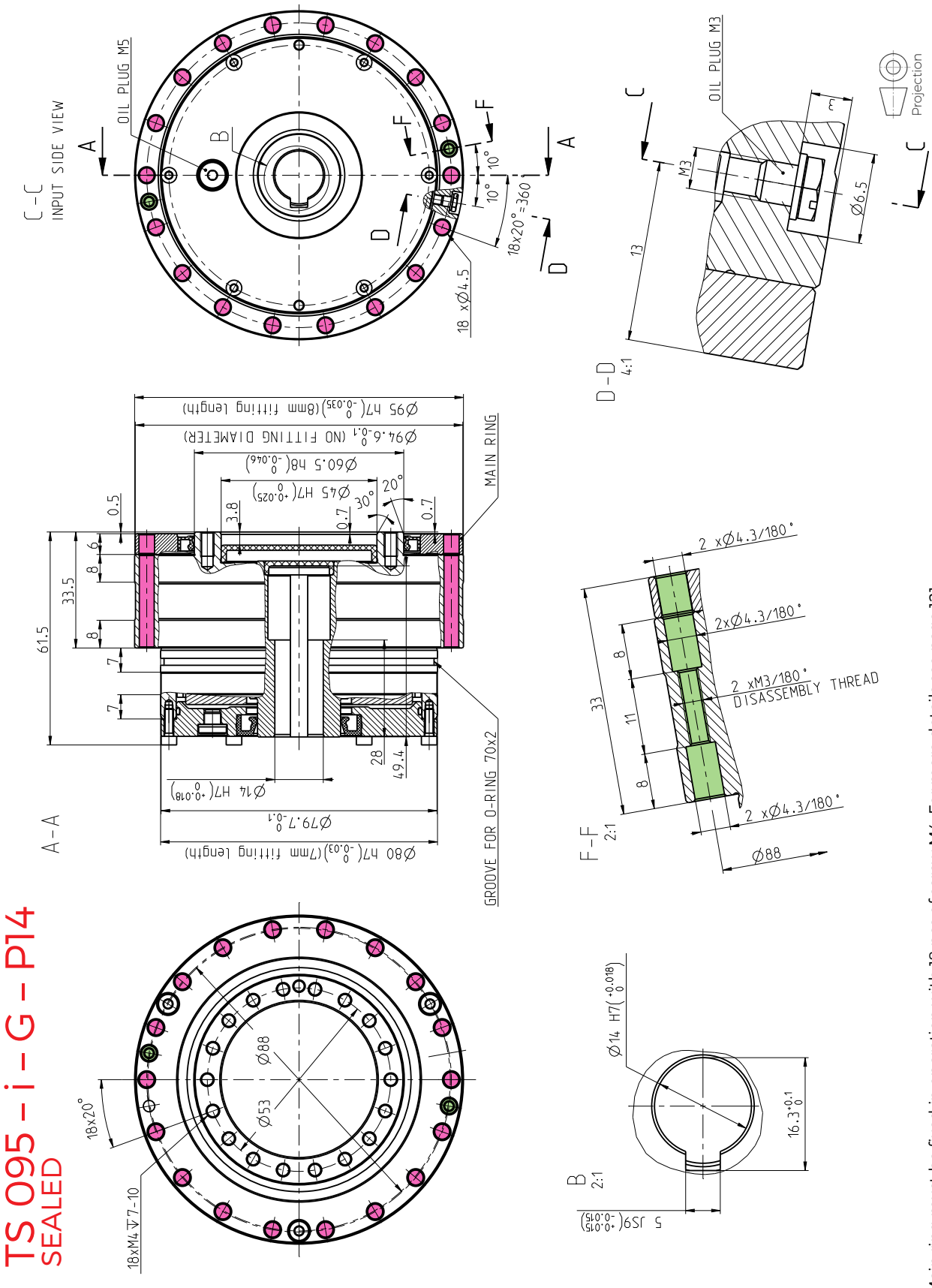

TS 095 – i – G – P14
SEALED

1. Main ring must be fixed in operation with 18 pcs of screw M4. For more details see page 121.

Courtesy of Steven Engineering, Inc - (800) 258-9200 - sales@steveneng.com - www.stevenengineering.com

TS 115 – i – G – P14
SEALED

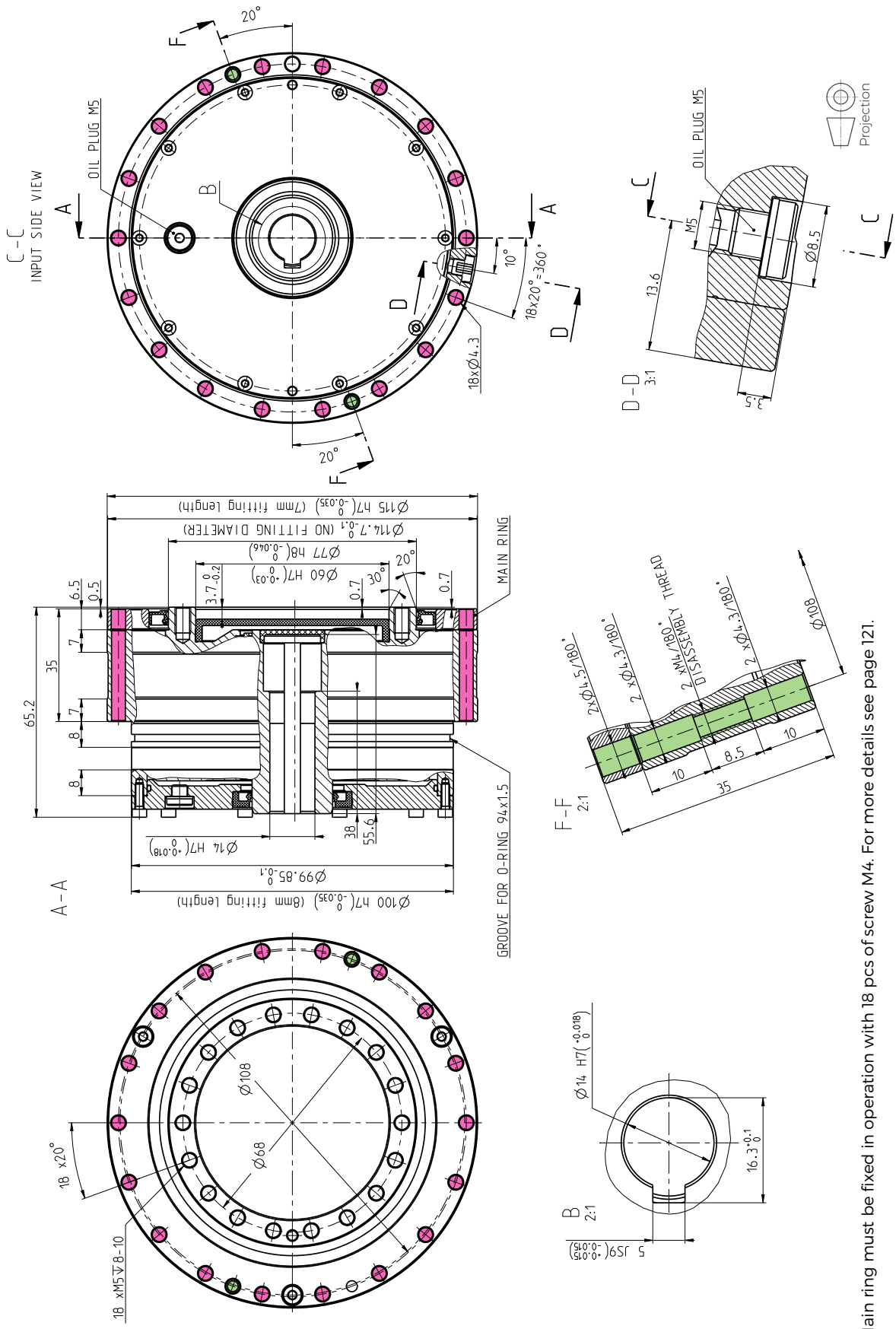

TS 115 – i – G – P14
SEALED

1. Main ring must be fixed in operation with 18 pcs of screw M4. For more details see page 121.

SPINEA BY TIMKEN
Courtesy of Steven Engineering, Inc - (800) 258-9200 - sales@steveneng.com - www.stevenengineering.com

TS 135 – i – G – P19
SEALED

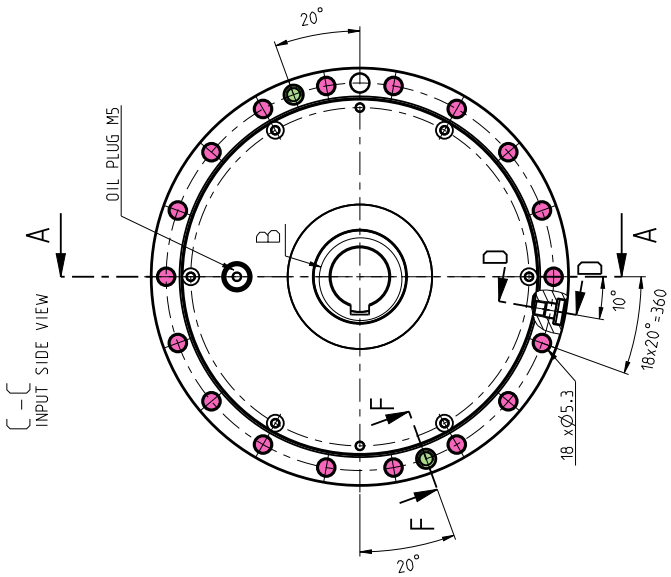

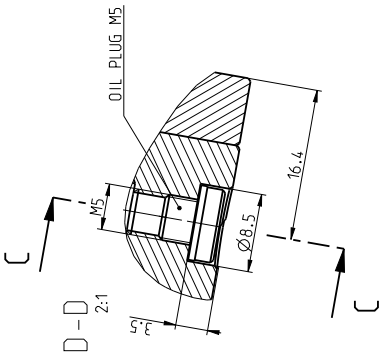

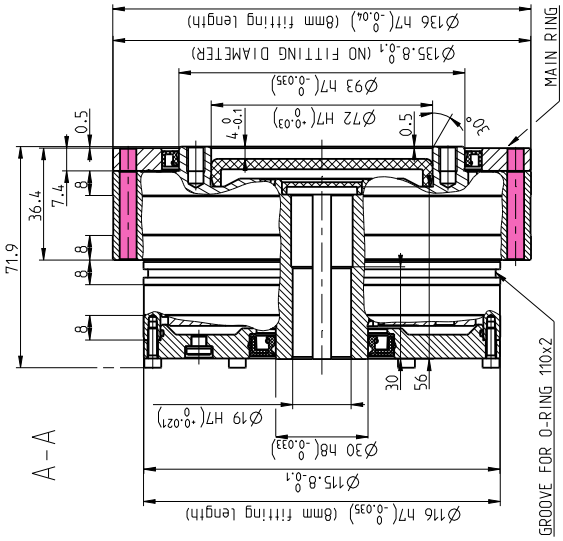

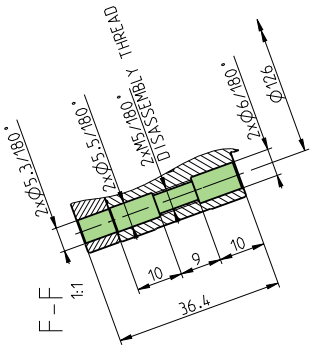

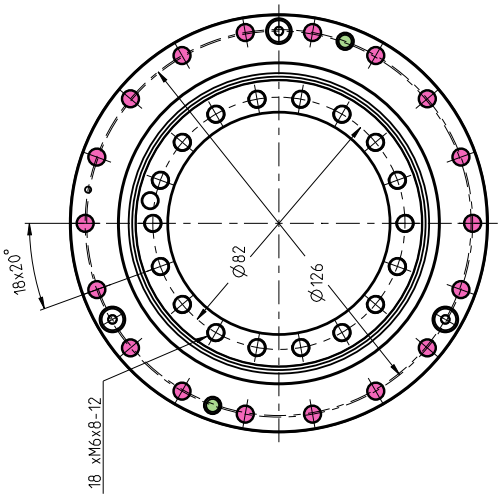

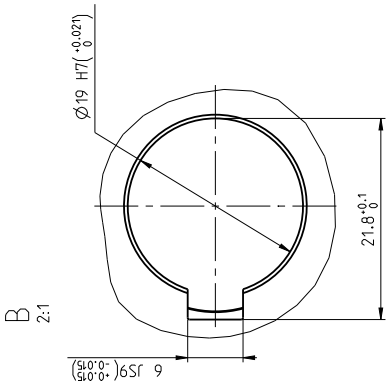

TS 135 – i – G – P19
SEALED

1. Main ring must be fixed in operation with 18 pcs of screw M5. For more details see page 121.

Courtesy of Steven Engineering, Inc - (800) 258-9200 - sales@steveneng.com - www.stevenengineering.com

TS 155 – i – G – P19
SEALED

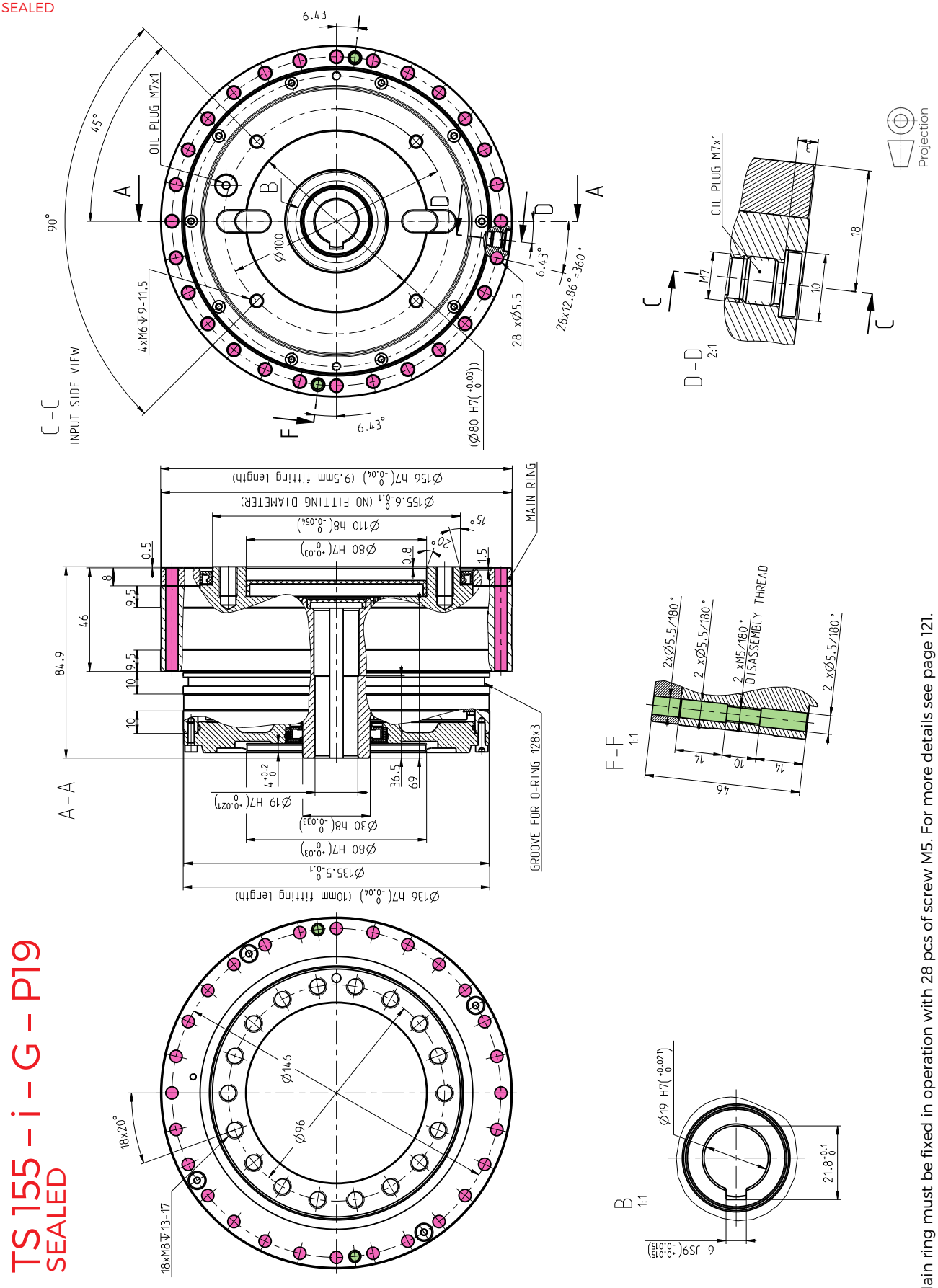

1. Main ring must be fixed in operation with 28 pcs of screw M5. For more details see page 121.

TS 155 – i – G – P19
SEALED

SPINEA BY TIMKEN
Courtesy of Steven Engineering, Inc - (800) 258-9200 - sales@steveneng.com - www.stevenengineering.com

TS 185 – i – G – P24
SEALED

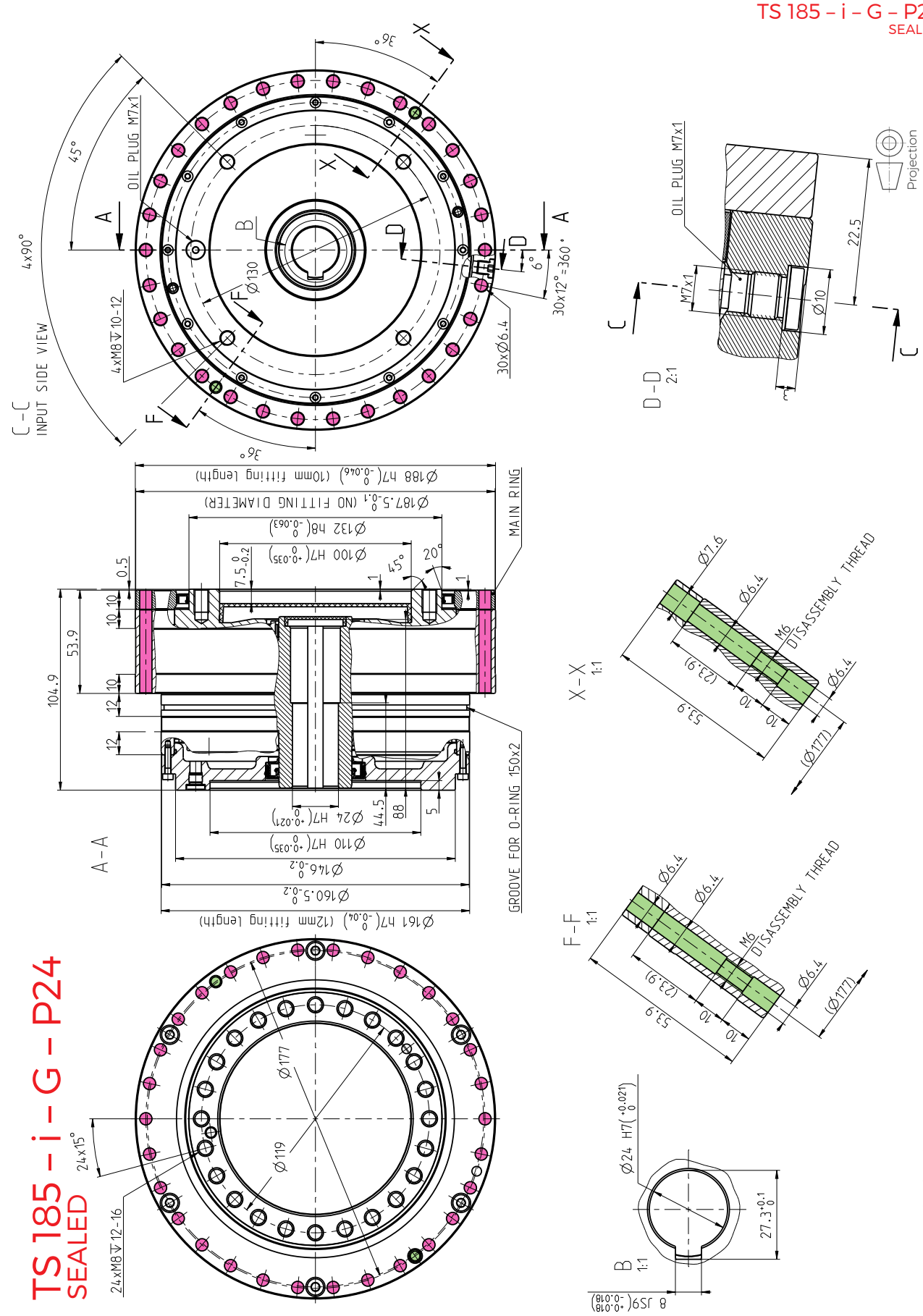

1. Main ring must be fixed in operation with 30 pcs of screw M6. For more details see page 121.

SPINEA BY TIMKEN
Courtesy of Steven Engineering, Inc - (800) 258-9200 - sales@steveneng.com - www.stevenengineering.com

TS 225 – i – G – P24
SEALED

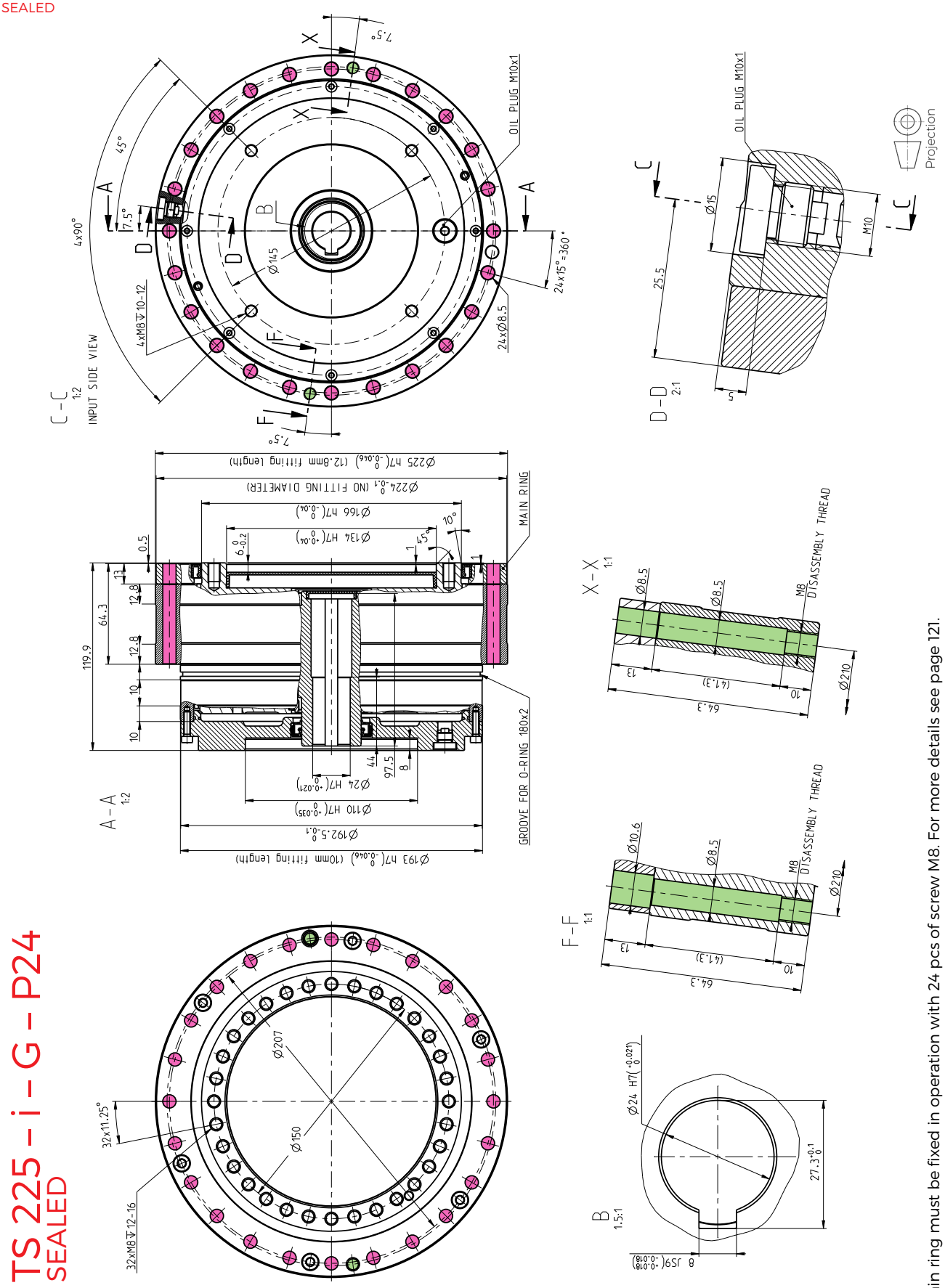

1. Main ring must be fixed in operation with 24 pcs of screw M8. For more details see page 121.

TS 225 – i – G – P24
SEALED

SPINEA BY TIMKEN
Courtesy of Steven Engineering, Inc - (800) 258-9200 - sales@steveneng.com - www.stevenengineering.com

TwinSpin®

GH SERIES

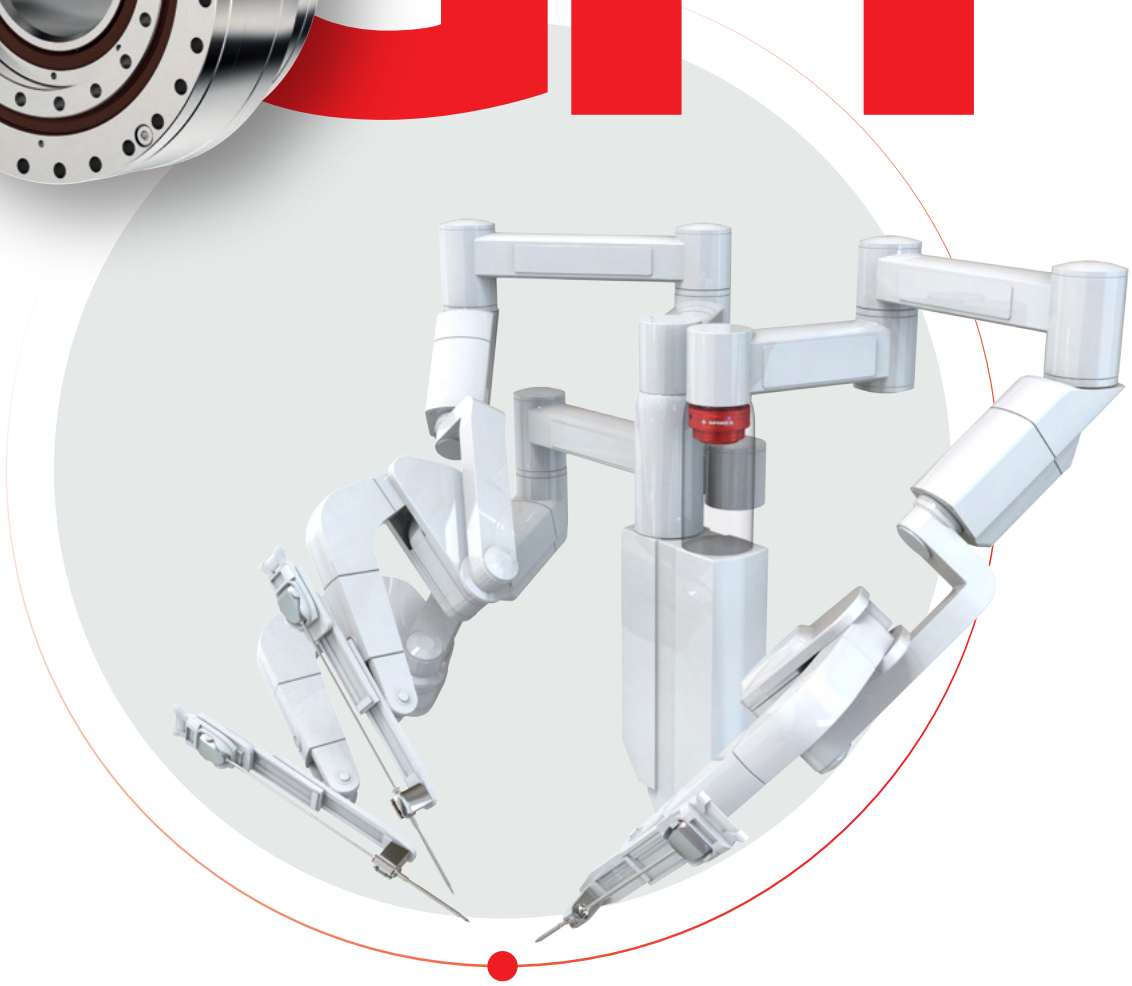

NEW HOLLOW SHAFT

TwinSpin® **GH** SERIES IS EXCELLENT
IN BOTH SURGICAL ROBOTS
AND MANY OTHERS

2.2 GH SERIES

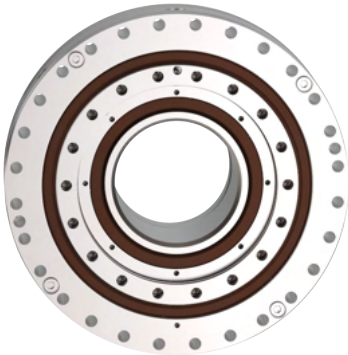

Tab. 2.2a: GH series rating table

Size	Reduction ratio	Shaft inside diameter	Rated output torque	Max. acceleration / deceleration torque	Maximum permissible torque at emergency / E-stop	Rated input speed	Maximum input speed 9)	Lost motion	Hysteresis	Angular transmission error 6)	No-load starting torque (max.) 8)
	i	d [mm]	T_R [Nm]	T_{acc} [Nm]	T_{em} [Nm]	n_R [rpm]	n_{max} [rpm]	LM [arcmin]	H [arcmin]	ATE [arcsec]	[Nm]
TS 075	41	16	29	58	145	2 000	3 800	<1	<1	72	0.40
	75						4 500				0.30
TS 085	47	21	41	82	205	2 000	3 800	<1	<1	72	0.60
	85						4 500				0.40
TS 115	55	35	130	260	650	2 000	2 500	<1	<1	60	0.70
	123						3 500				0.60
TS 125	**49**	32	180	450	900	2 000	2 400	<1	<1	60	0.90
	99						3 800				0.80
TS 155	**53**	55	260	650	1 300	2 000	2 600	<1	<1	30	1.20
	109						3 200				1.00
TS 245	**51**	70	1 125	2 800	5 600	1 500	2 100	<1	<1	25	2.50
TS 285	**55**	90	1 700	4 250	8 500	1 500	2 300	<1	<1	50	4.00
	125						2 500				3.50

RIGHT TO CHANGE WITHOUT PRIOR NOTICE RESERVED

1) Mean statistical value. For further information see chapter Torsional stiffness, Tilting stiffness.
2) Load at output speed 15 rpm and L_{10} = 12 000 hrs.
3) Moment M_c value for $F_a = 0$. If $F_a \neq 0$, see chapter 3.5.
4) Axial force $F_{a\,max}$ value for $M_c = 0$. If $M_c \neq 0$ see chapter 3.5.
5) The parameter depends on the high precision reduction gear version.
6) The parameter depends on the version of the high precision reduction gear, ratio and lost motion.
7) The parameter values are informative. Exact value depends on the specific version of the high precision reduction gear.
8) Temperatures of the high precision reduction gear lower than 20°C will cause higher no-load starting or back driving torque.
9) Instantaneous speed peak that may occur within the working cycle.
10) For more information please contact the SPINEA® sales department.

Courtesy of Steven Engineering, Inc - (800) 258-9200 - sales@steveneng.com - www.stevenengineering.com

Tab. 2.2a: GH series rating table - continued

Size	Reduction ratio	Max. backdriving torque 8)	Torsional stiffness 50-100% T_r 1) 6)	Tilting stiffness 1) 5)	Rated moment 2) 3)	Allowable moment	Allowable radial force 2)	Allowable axial force 2) 4)	Input inertia 7)	Weight 7)
	i	[Nm]	k_t [Nm/arcmin]	M_t [Nm/arcmin]	M_c [Nm]	M_{cmax} [Nm]	F_{rR} [kN]	$F_{a\,max}$ [kN]	I [10^{-4} kgm²]	m [kg]
TS 075	41	13	7	70	85	174	1.8	5.7	0.1	0.75
	75	15								
TS 085	47	25	9.5	85	115	230	2	6.4	0.29	1.3
	85	36	9.7							
TS 115	55	42	21	200	280	560	4	12.5	0.65	2.9
	123	91	25							
TS 125	**49**	40	28	280	445	890	5.7	17.7	1.06	3.7
	99	95	29							
TS 155	**53**	– *10)	67	900	820	1 640	8	26	5.6	6.9
	109		69							
TS 245	**51**	160	285	4 000	2 600	5 200	16	50	26	28.5
TS 285	**55**	360	405	6 500	5 670	11 300	30	93	80	35.5
	125	1 200	460							

IMPORTANT NOTES:

- Load values in the table are valid for the nominal life of L_{10} = 6 000 [Hrs]..
- High precision reduction gears are preferred for intermittent cycles (S3-S8); the output speed in applications is an inverted variable.
- The continuous mode cycle (S1) should be consulted with the manufacturer.
- If the output speed in application is below 0,1 rpm please consult with the manufacturer.
- The values in the table refer to nominal operating temperature.
- Please note the temperature on the gear case that should not exceed 60°C.

The ratios highlighted in bold are recommended by SPINEA® as optimal versions in terms of price and delivery.

Courtesy of Steven Engineering, Inc - (800) 258-9200 - sales@steveneng.com - www.stevenengineering.com

TS 075 – i – GH – H16

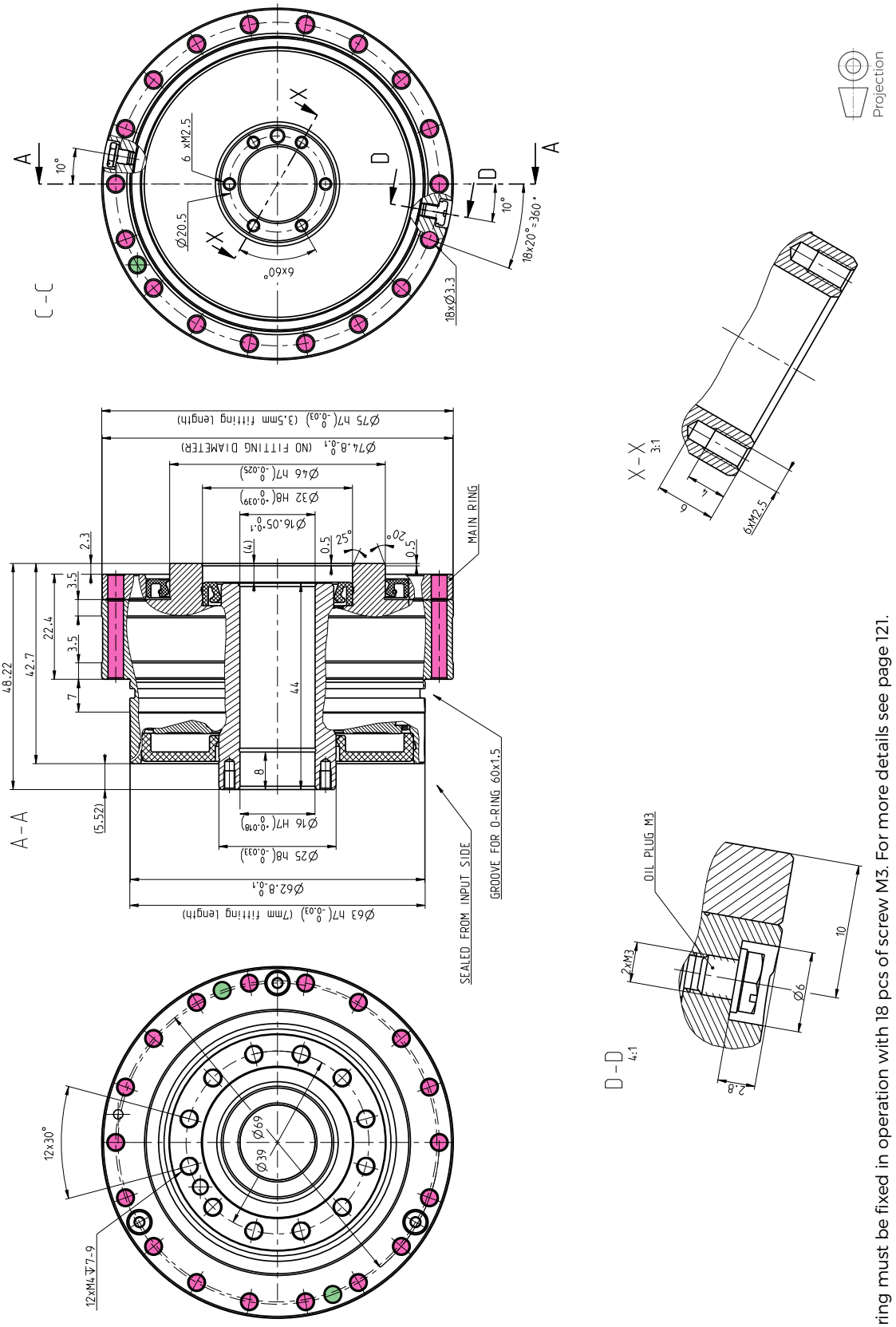

TS 075 – i – GH – H16

1. Main ring must be fixed in operation with 18 pcs of screw M3. For more details see page 121.

SPINEA BY TIMKEN

Courtesy of Steven Engineering, Inc - (800) 258-9200 - sales@steveneng.com - www.stevenengineering.com

TS 085 – i – GH – H21

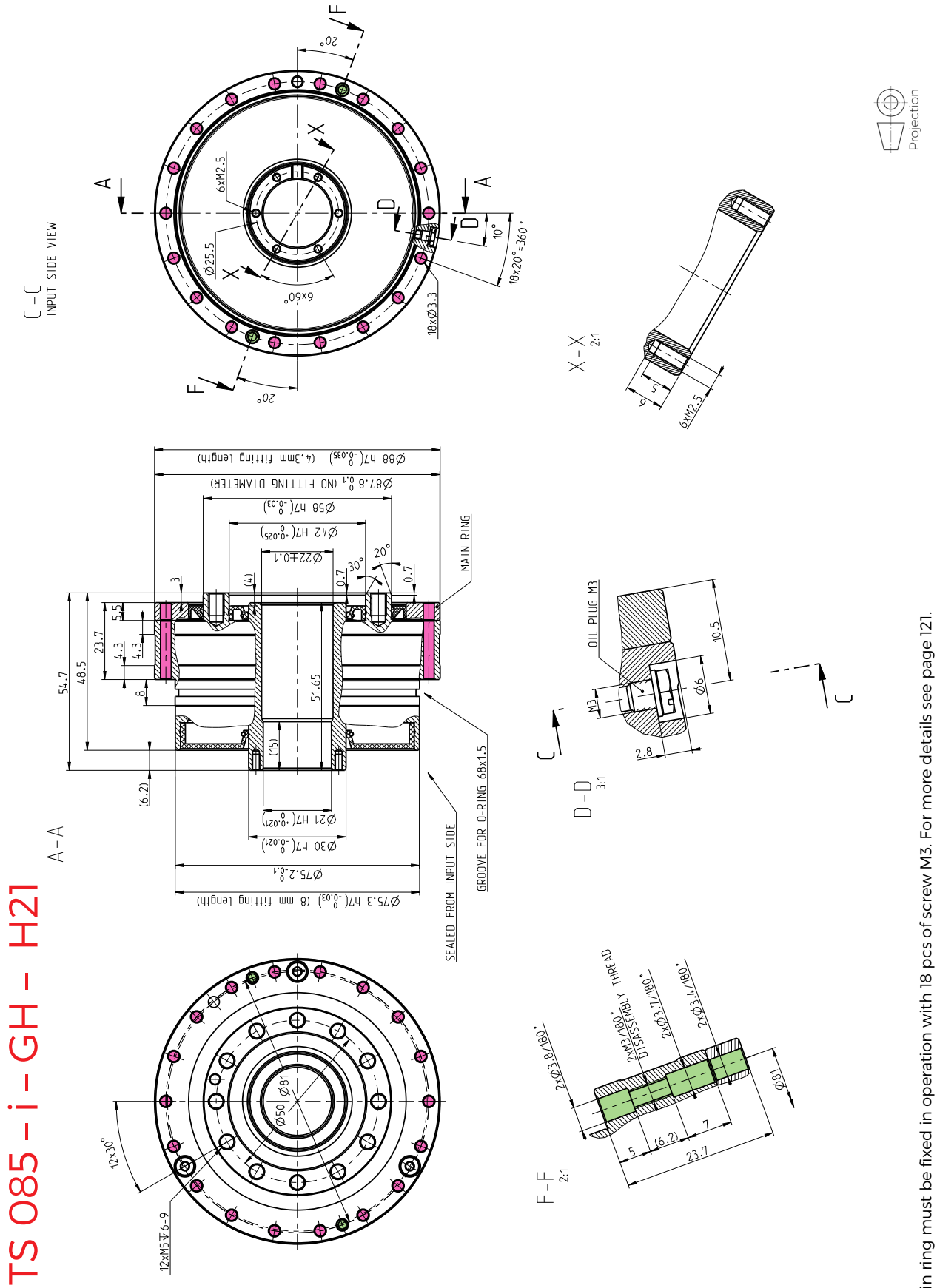

1. Main ring must be fixed in operation with 18 pcs of screw M3. For more details see page 121.

SPINEA BY TIMKEN
Courtesy of Steven Engineering, Inc - (800) 258-9200 - sales@steveneng.com - www.stevenengineering.com

TS 115 – i – GH – H35

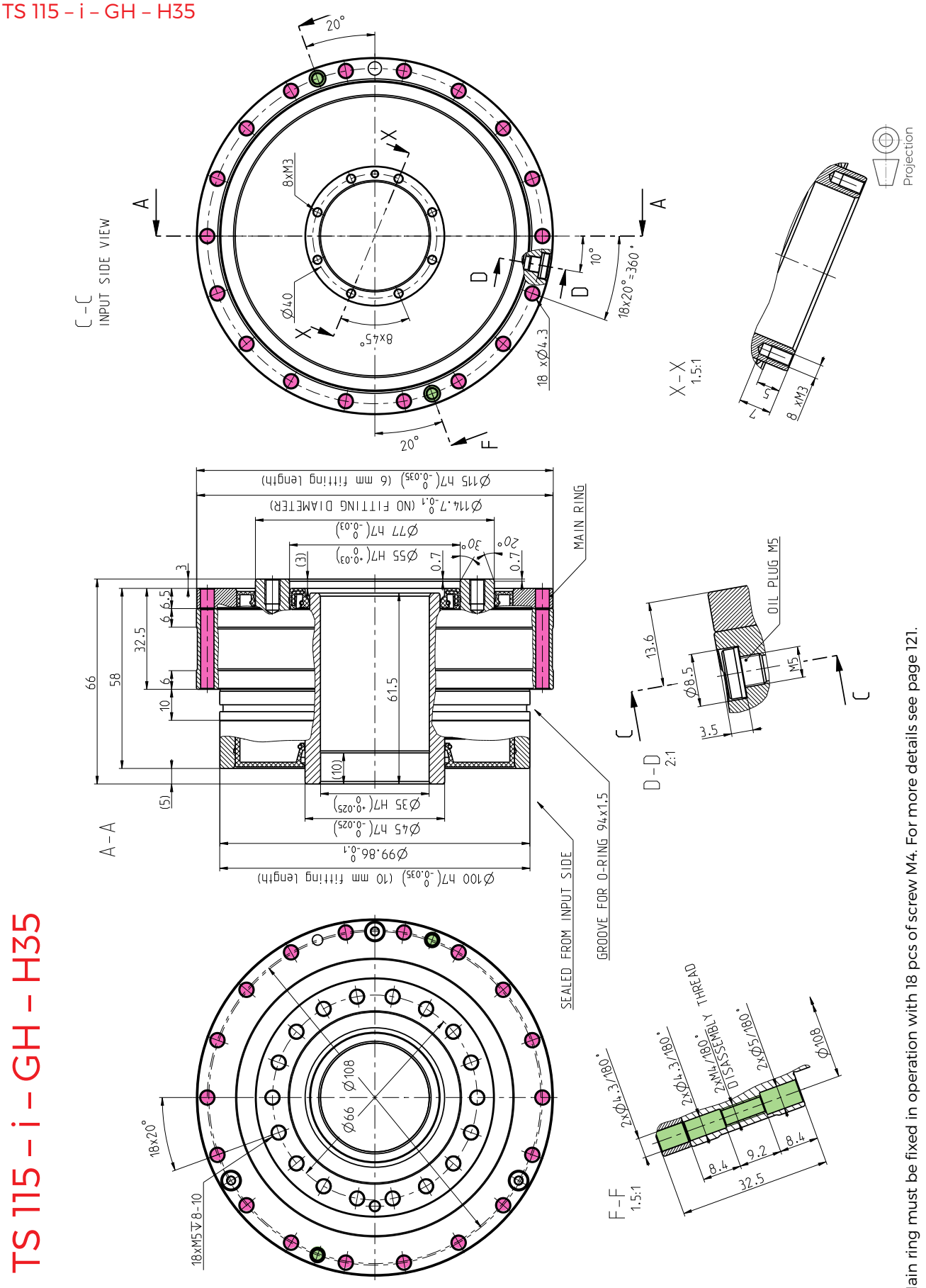

TS 115 – i – GH – H35

1. Main ring must be fixed in operation with 18 pcs of screw M4. For more details see page 121.

SPINEA BY TIMKEN

Courtesy of Steven Engineering, Inc - (800) 258-9200 - sales@steveneng.com - www.stevenengineering.com

TS 125 – i – GH – H32

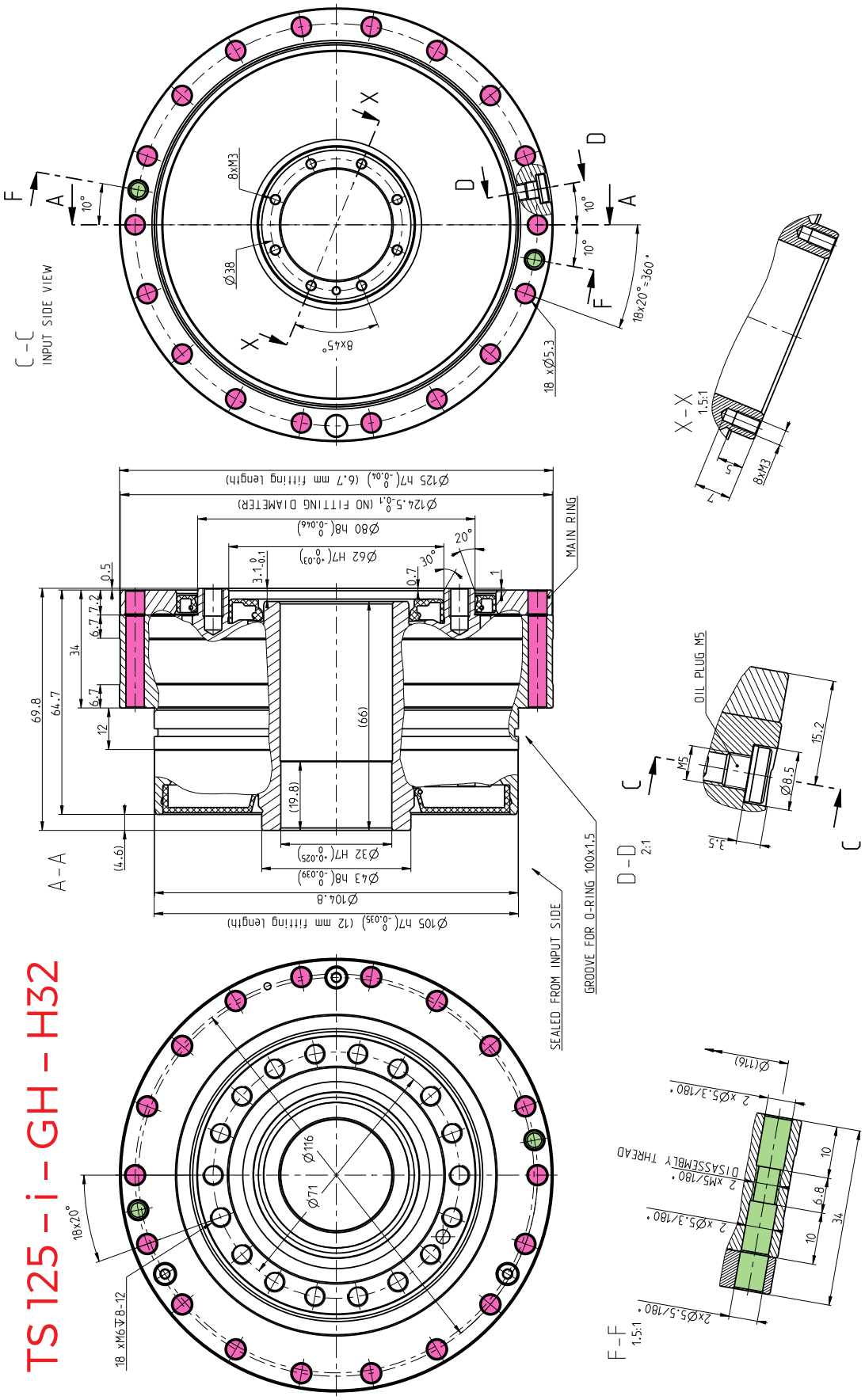

1. Main ring must be fixed in operation with 18 pcs of screw M5. For more details see page 121.

SPINEA BY TIMKEN
Courtesy of Steven Engineering, Inc - (800) 258-9200 - sales@steveneng.com - www.stevenengineering.com

TS 155 – i – GH – H55

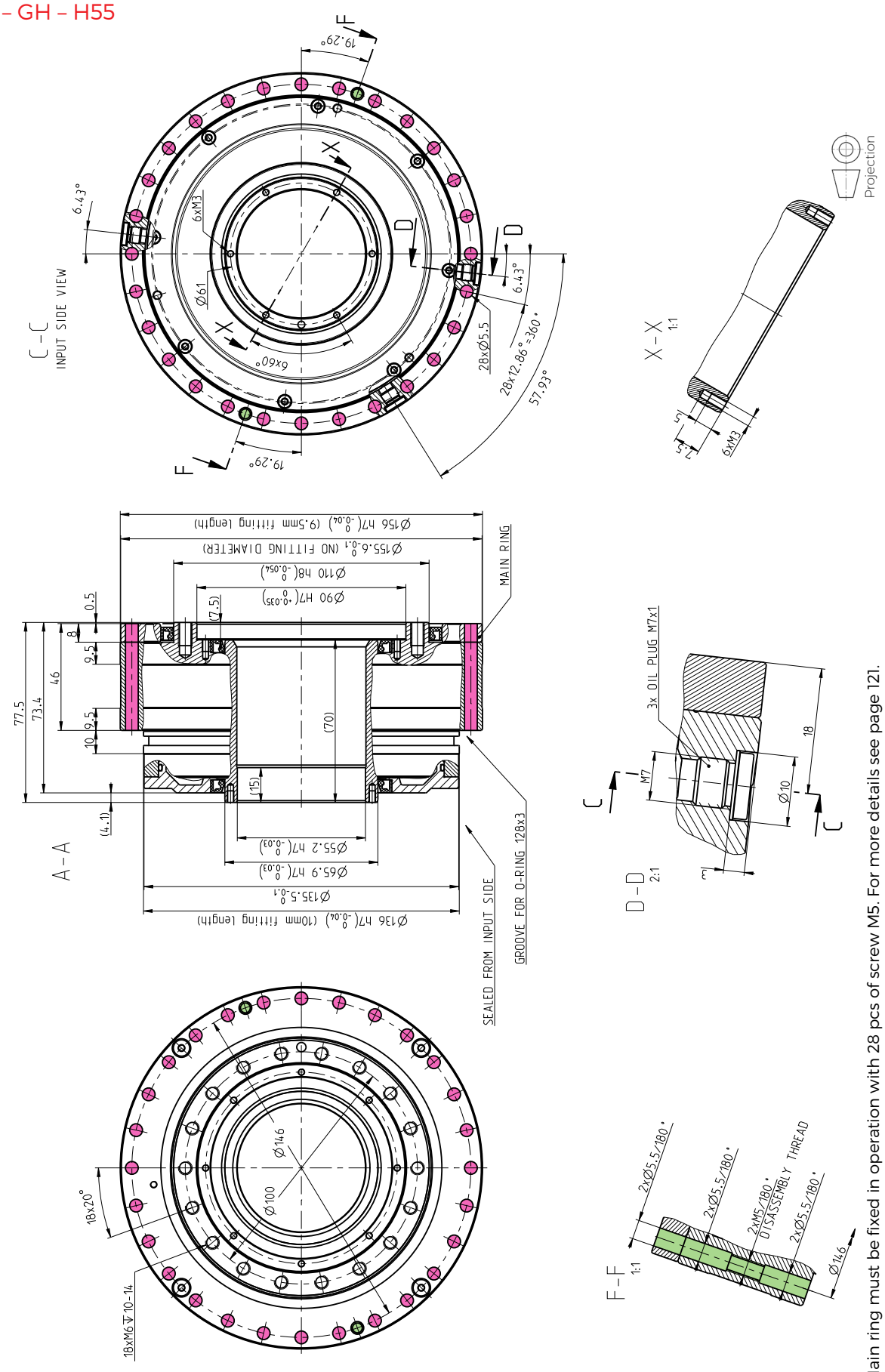

1. Main ring must be fixed in operation with 28 pcs of screw M5. For more details see page 121.

SPINEA BY TIMKEN

Courtesy of Steven Engineering, Inc - (800) 258-9200 - sales@steveneng.com - www.stevenengineering.com

TS 245 – i – GH – H70

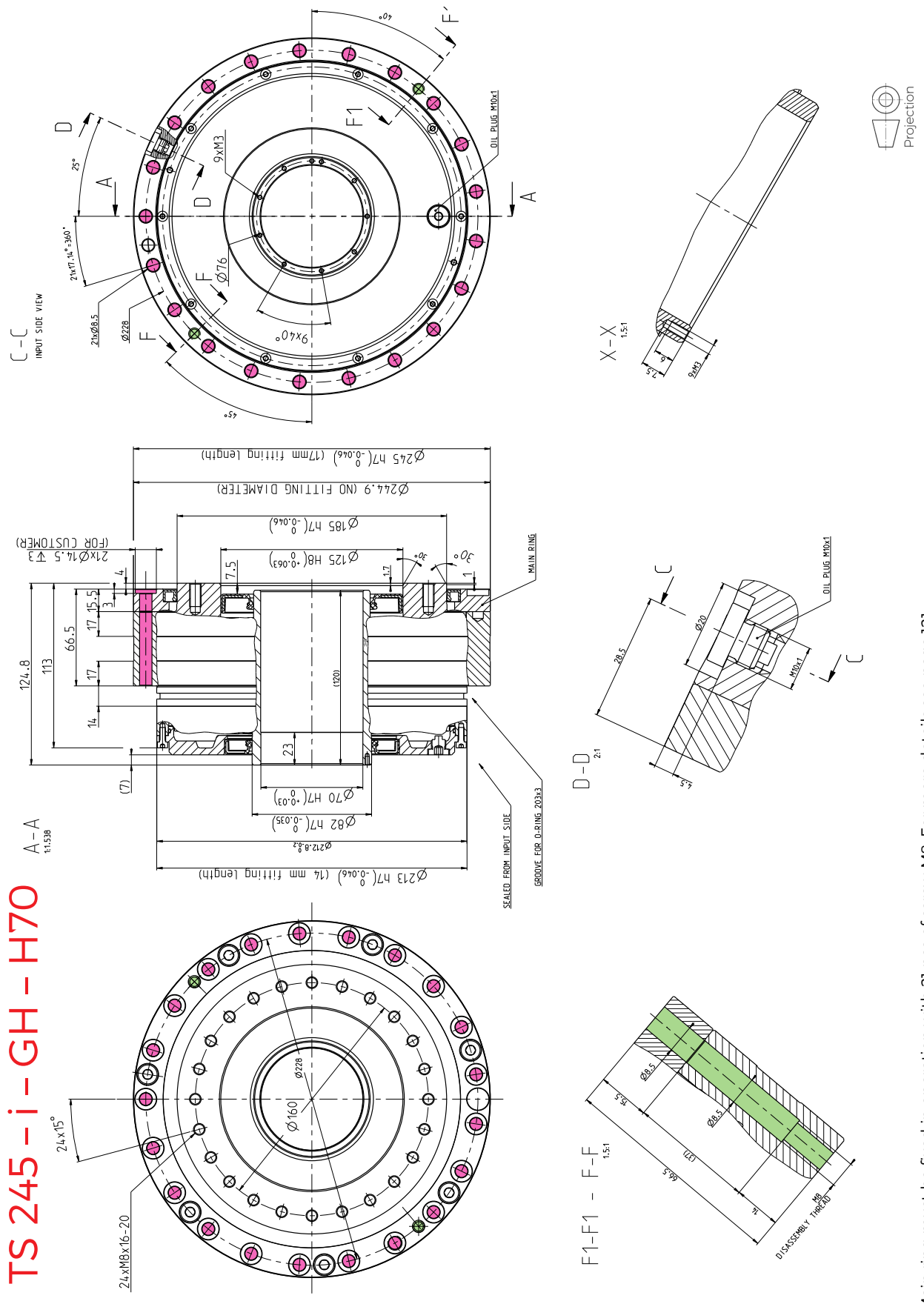

1. Main ring must be fixed in operation with 21 pcs of screw M8. For more details see page 121.

Courtesy of Steven Engineering, Inc - (800) 258-9200 - sales@steveneng.com - www.stevenengineering.com

TS 285 – i – GH – H90

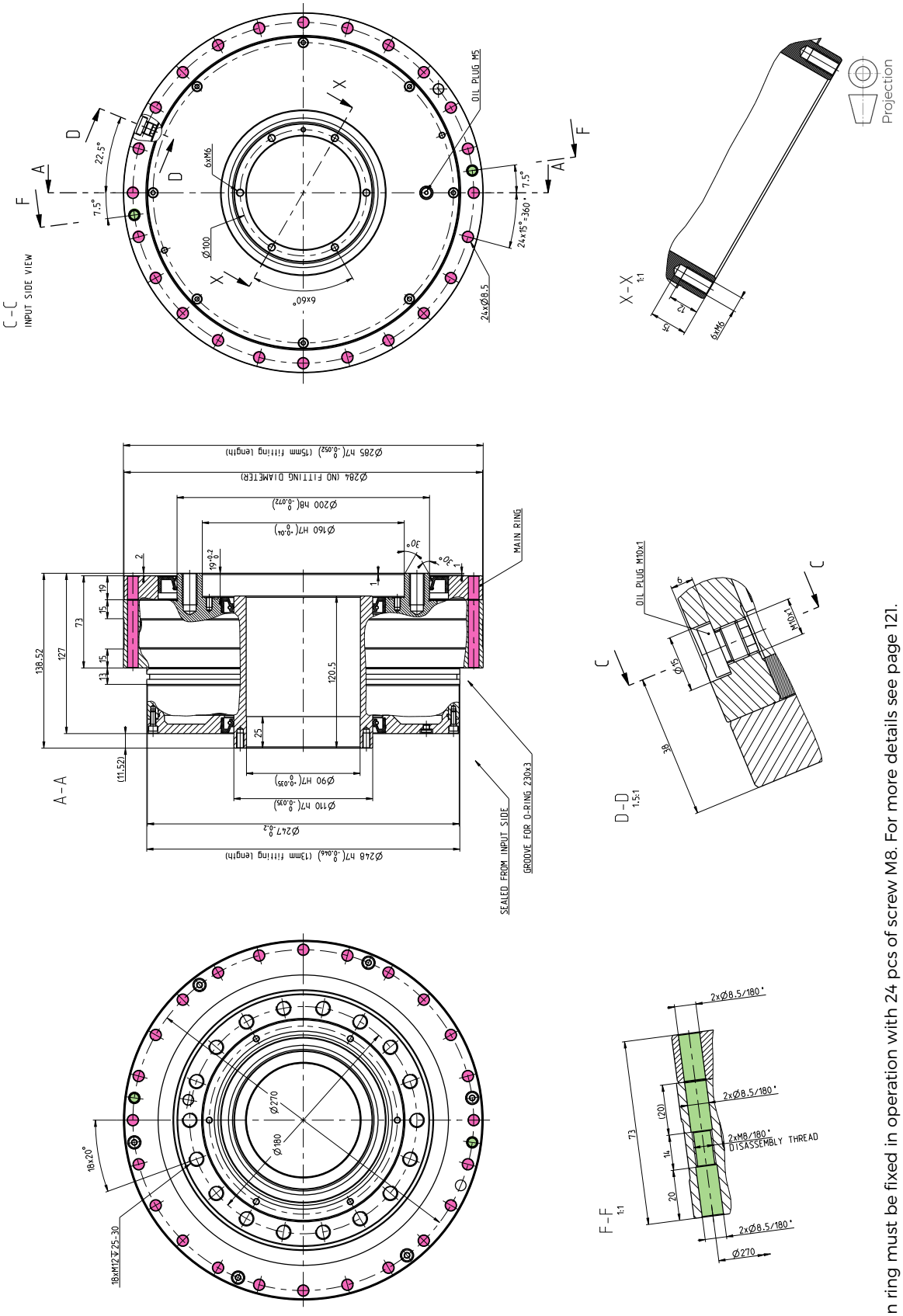

TS 285 – i – GH – H90

1. Main ring must be fixed in operation with 24 pcs of screw M8. For more details see page 121.

SPINEA BY TIMKEN

Courtesy of Steven Engineering, Inc - (800) 258-9200 - sales@steveneng.com - www.stevenengineering.com

TwinSpin®

T SERIES

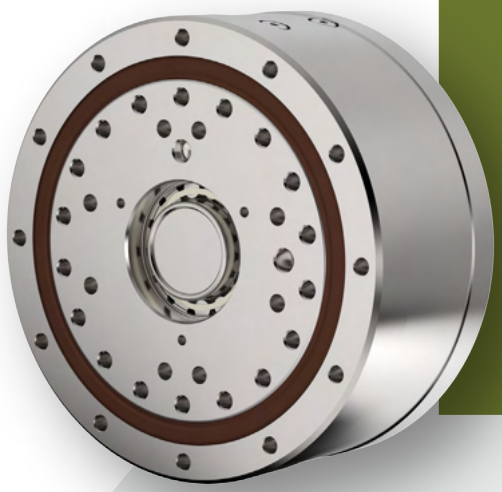

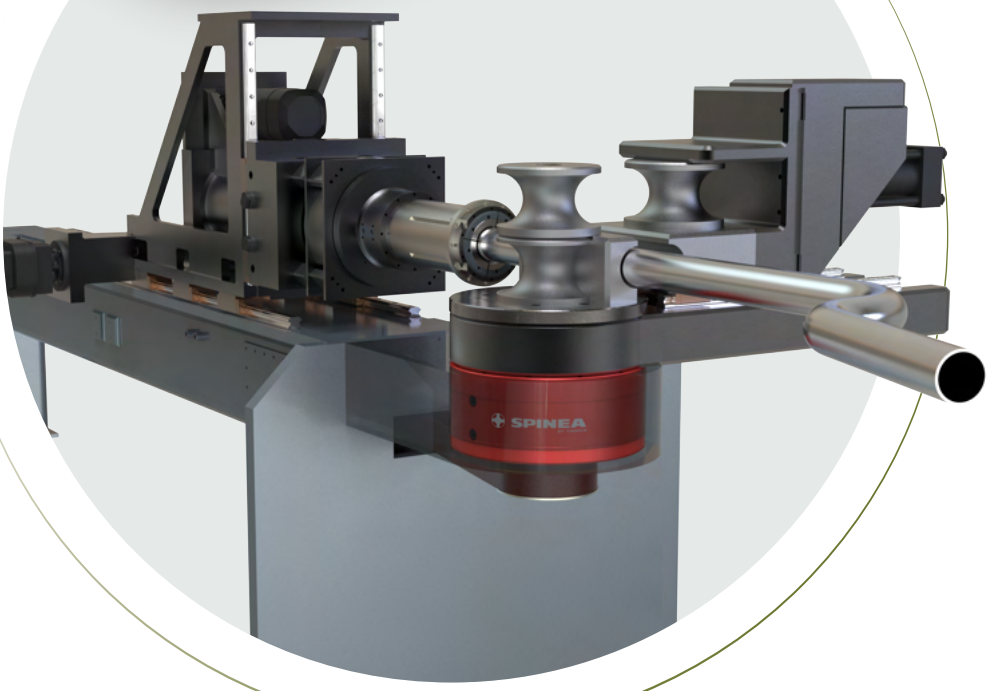

STANDARD CYLINDRICAL HOUSING

TwinSpin® **T** SERIES IS EXCELLENT
IN BENDING MACHINES
AND MANY OTHERS

2.3 T SERIES

Advantages

- **zero- backlash reduction gear**
- **high moment capacity**
- **excellent positioning accuracy and positioning repeatibility**
- **high torsional and tilting stiffness**
- **small dimensions and low weight**
- **high reduction ratios**
- **long lifetime**
- **easy assembly**

The **T series** represents a wide range of TwinSpin® high precision reduction gears with a cylinder shaped case. The T series high precision reduction gears comprise an accurate reduction mechanism and high-capacity radial and axial cylindrical roller bearings. This design of reduction gears allows the mounting of the load directly on the output flange or the case without the need of additional bearings. The T series high precision reduction gears are characterized by a modular design, which allows the mounting of desirable motor type to the reduction gear by means of a motor connection flange. The T series includes TwinSpin® high precision reduction gears that are not completely sealed; an inlet flange and a gasket kit have to be used for the sealing. Upon the customer's request, SPINEA® is able to supply a completely sealed reduction gear with a flange according to the customer's motor.

Tab. 2.3a: T series features

Case	a) TB- threaded holes in case 1) b) TC- threaded and through holes in case 2
Input flange connection	Shaft sealing / adapter flange is offered in the following versions: a) motor connection flange b) sealed input cover c) without flange
Input shaft design	Input shaft is offered in the following versions: a) shaft with a keyway b) according to special request
Installation and operation characteristics	A wider range of modular configurations

1) Valid for TS 060, TS 070, TS 080, TS 110, TS 140 2) Valid for TS 170, TS 200, TS 240, TS 300

SPINEA BY TIMKEN
Courtesy of Steven Engineering, Inc - (800) 258-9200 - sales@steveneng.com - www.stevenengineering.com

Tab. 2.3b: T series ordering specifications

TS - 200 - 125 - TC - P24

Name	Size	Ratio	Series version	Shaft version	
				P (DIN 6885) [1]	S [2]
TS	60	35, **47**, 63	TB	6	•
	70	41, 57, **75**	TB	11	•
	80	37, **63**, 85	TB	8	•
	110	33, 67, **89**, 119	TB	14	•
	140	**33**, 57, 87, **115**, 139	TB	19	•
	170	33, **59**, 83, **105**, 141	TC	24	•
	200	**63**, 83, **125**, 169	TC	24	•
	240	37, 87, 121, **153**	TC	28	•
	300	**63**, 125, 191	TC	28	•

Note: An example of an ordering code of modified TwinSpin® T series reduction gear with a motor flange:
TS200 – 125 –TC– P24 – M235 – P231. The marks M235 and P231 for a specific modification are defined by the manufacturer.
1) Max. dimension
2) Upon request

Shaft version

P Shaft with a keyway

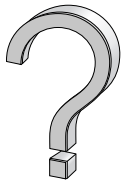

S Special shaft

Courtesy of Steven Engineering, Inc - (800) 258-9200 - sales@steveneng.com - www.stevenengineering.com

Tab. 2.3c: T series rating table

Size	Reduction ratio	Rated output torque	Max. acceleration / deceleration torque	Permissible output torque at emergency stop	Rated input speed	Max. allowable input speed 9)	Tilting stiffness 1) 5)	Torsional stiffness 1) 6)	Max. no-load starting torque 8)	Max. back driving torque 8) 10)
	i	T_R [Nm]	T_{acc} [Nm]	T_{em} [Nm]	n_R [rpm]	n_{max} [rpm]	M_t [Nm/arcmin]	k_t [Nm/arcmin]	[Nm]	[Nm]
TS 060	35	37	74	185	2 000	4 000	27	3.5	0.16	9
	47					5 000			0.12	9
	63								0.12	10
TS 070	41	50	100	250	2 000	4 000	35	7	0.30	11
	57					5 000			0.15	12
	75								0.14	13
TS 080	37	78	156	390	2 000	4 000	62	9	0.35	14
	63					5 000			0.20	15
	85								0.18	16
TS 110	33	122	244	610	2 000	3 500	150	22	0.35	24
	67					3 900			0.35	28
	89					4 500			0.30	30
	119								0.20	33
TS 140	**33**	268	670	1 340	2 000	3 000	340	54	0.60	40
	57					3 200			0.40	40
	87					4 500			0.35	55
	115								0.35	65
	139								0.34	65
TS 170	33	495	1 237	2 475	2 000	3 000	705	102	2.00	75
	59					3 500			2.00	85
	83								1.40	100
	105					4 000			1.20	125
	141								0.95	125
TS 200	**63**	890	2 225	4 450	2 000	3 500	1 070	178	1.90	90
	83					4 000			1.80	120
	125					4 000			1.70	200
	169					4 500			0.90	210
TS 240	37	1 620	4 050	8 100	1 500	2 000	1 800	340	3.00	90
	87					3 000			1.75	160
	121					3 500			1.40	170
	153					3 700			1.20	180
TS 300	**63**	2 940	7 350	14 700	1 500	2 500	3 500	680	3.00	200
	125					3 200			2.00	250
	191					3 500			1.50	300

RIGHT TO CHANGE WITHOUT PRIOR NOTICE RESERVED

1) Mean statistical value. For further information see chapter Torsional stiffness, Tilting stiffness.
2) Load at output speed 15 rpm.
3) Moment $M_{c\,max}$ value for F_a=0. If $F_a \neq 0$, see chapter 3.5.
4) Axial force F_a max value for M_c=0. If $M_c \neq 0$, see chapter 3.5.
5) The parameter depends on the high precision reduction gear version.
6) The parameter depends on the version of the high precision reduction gear, ratio and lost motion.
7) The parameter values are informative. Exact value depends on the specific version of the high precision reduction gear.
8) Temperatures of the high precision reduction gear below 20°C will cause higher no-load starting or back driving torque.
9) Instantaneous speed peak that may occur within the working cycle.
10) Valid for unsealed version of the high precision reduction gear.

SPINEA BY TIMKEN

Courtesy of Steven Engineering, Inc - (800) 258-9200 - sales@steveneng.com - www.stevenengineering.com

Tab. 2.3c: T series rating table - continued

Size	Reduction ratio	Max. lost motion	Average angular transmission error 1) 6)	Hysteresis	Max. moment 2) 3)	Rated radial force 2)	Max. axial force 2) 4)	Input inertia 7)	Weight 7)
	i	LM [arcmin]	ATE [arcsec]	H [arcmin]	$M_{c\,max}$ [Nm]	F_{rR} [kN]	$F_{a\,max}$ [kN]	I [10^{-4} kgm^2]	m [kg]
TS 060	35	<1.5	±36	<1.5	107	2.6	3.7	0.006	0.86
	47								
	63								
TS 070	41	<1.5	±36	<1.5	142	2.8	4.1	0.061	1.05
	57								
	75								
TS 080	37	<1.5	±36	<1.5	280	4.8	6.9	0.03	1.64
	63								
	85								
TS 110	33	<1.0	±20	<1.0	740	9.3	13.1	0.16	3.76
	67								
	89								
	119								
TS 140	**33**	<1.0	±20	<1.0	1 160	11.5	17	0.67	6.45
	57								
	87								
	115								
	139								
TS 170	33	<1.0	±20	<1.0	2 430	19.2	27.9	1.15	11.07
	59								
	83								
	105								
	141								
TS 200	**63**	<1.0	±18	<1.0	3 300	21.1	31.7	2.6	17.23
	83								
	125								
	169								
TS 240	37	<1.0	±18	<1.0	5 720	30.8	47.3	3.9	31.15
	87								
	121								
	153								
TS 300	**63**	<1.0	±18	<1.0	12 000	45.3	68.1	11.2	55.73
	125								
	191								

IMPORTANT NOTES:

- Instantaneous speed peak that may occur within the working cycle.
- Note please the temperature on the gear case that should not exceed 60°C.
- Load values in the table are valid for the nominal life of L_{10} = 6 000 [Hrs].
- High precision reduction gears are preferred for intermittent cycles (S3-S8); the output speed in applications is an inverted-variable. Continuous mode cycle (S1) should be consulted with the manufacturer.
- Dimensional pictures of the T series reduction gears are listed in the catalogue without sealing.
- Sealing options are described in the chapter Assembly instructions.
- Please consult maximum speed in a duty cycle with the manufacturer.
- Values in the table refer to nominal operating temperature.

The ratios highlighted in bold are recommended by SPINEA® as optimal versions in terms of price and delivery.

Courtesy of Steven Engineering, Inc - (800) 258-9200 - sales@steveneng.com - www.stevenengineering.com

TS 060 – i – TB – P6

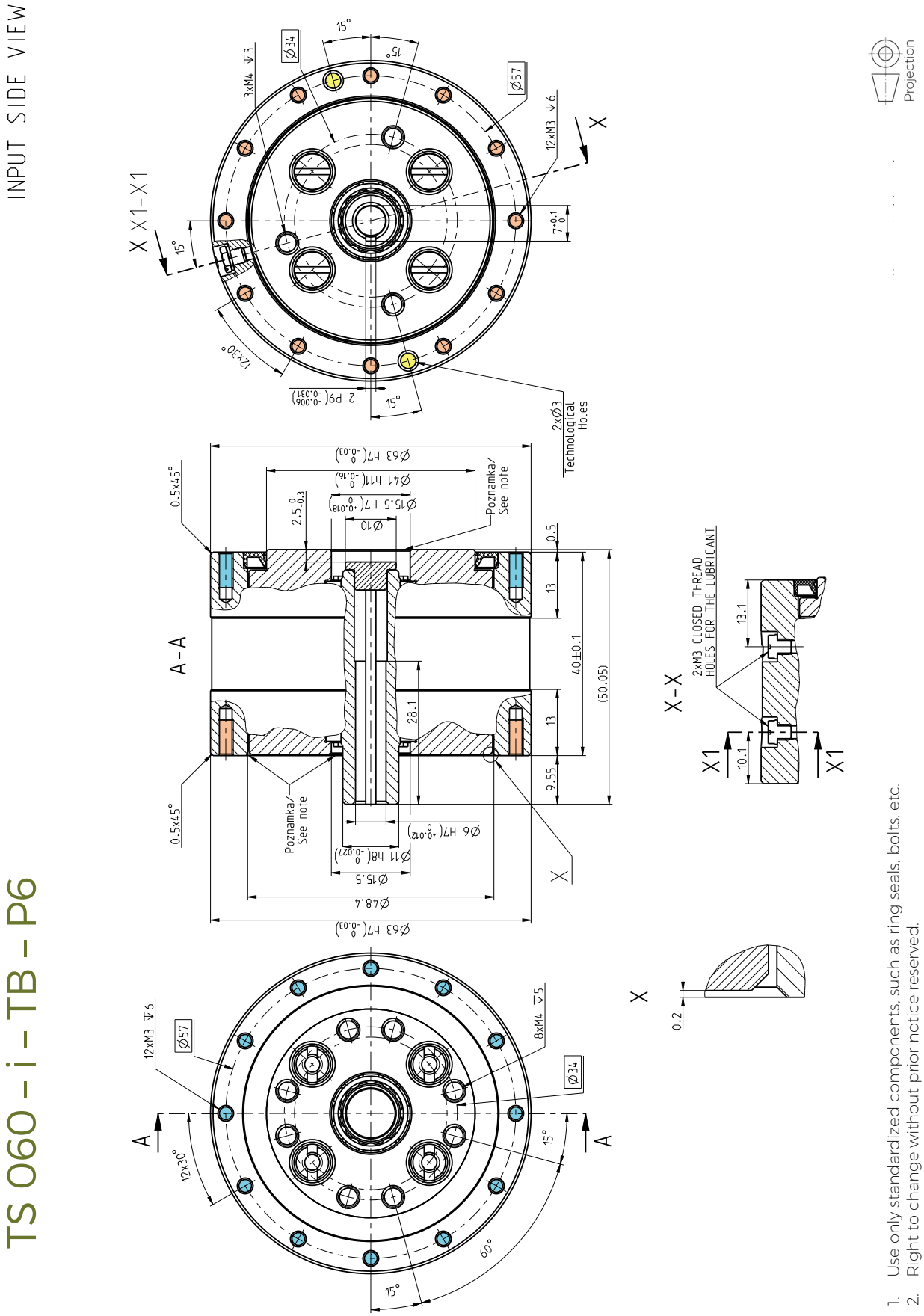

SPINEA BY TIMKEN
Courtesy of Steven Engineering, Inc - (800) 258-9200 - sales@steveneng.com - www.stevenengineering.com

TS 070 - i - TB - P11

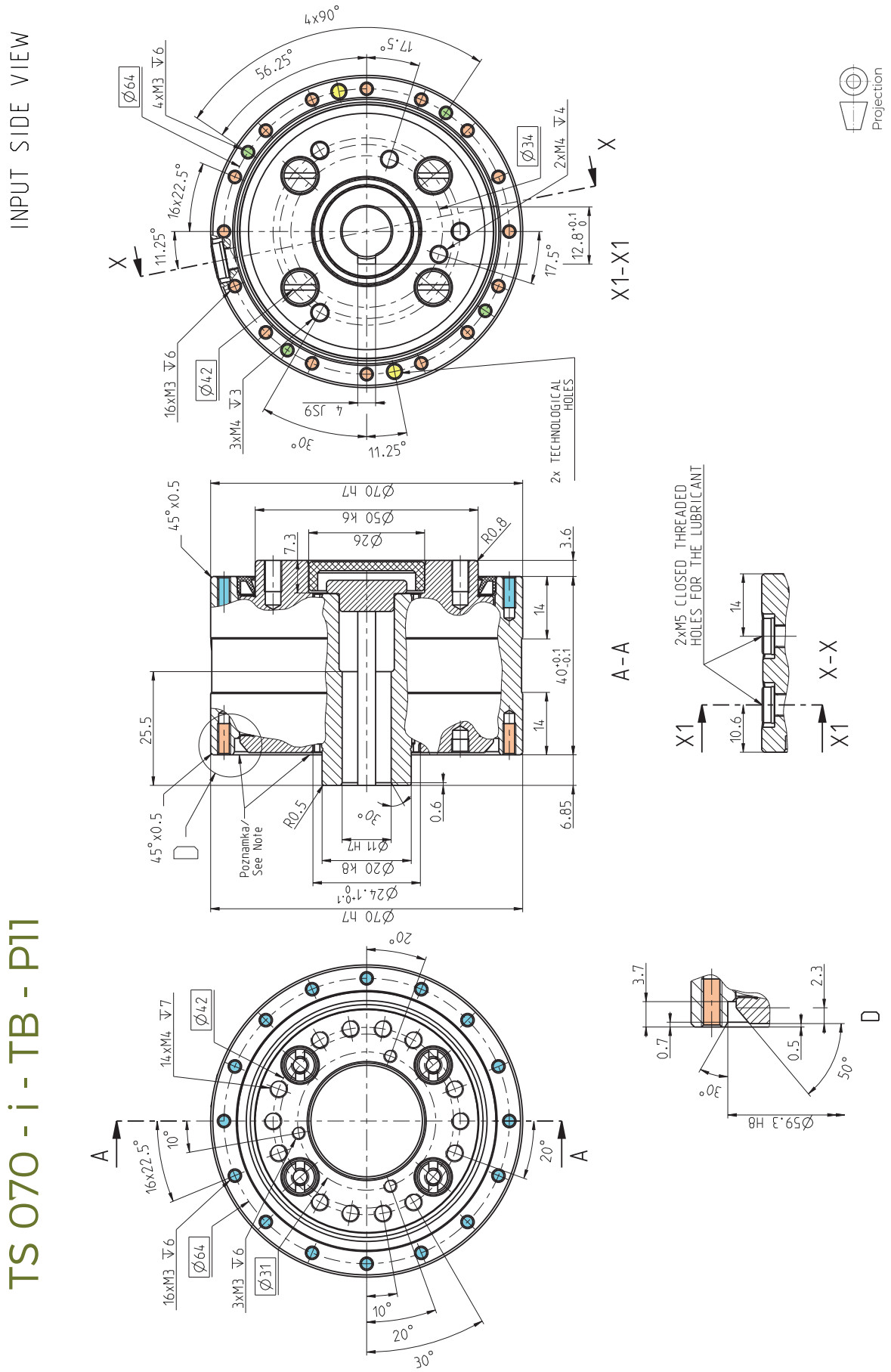

1. Use only standardized components, such as ring seals, bolts, etc.
2. Right to change without prior notice reserved.
3. Unsealed space, see the installation instructions in the TS Catalogue.

T SERIES

SPINEA BY TIMKEN
Courtesy of Steven Engineering, Inc - (800) 258-9200 - sales@steveneng.com - www.stevenengineering.com

TS 080 - i - TB - P8

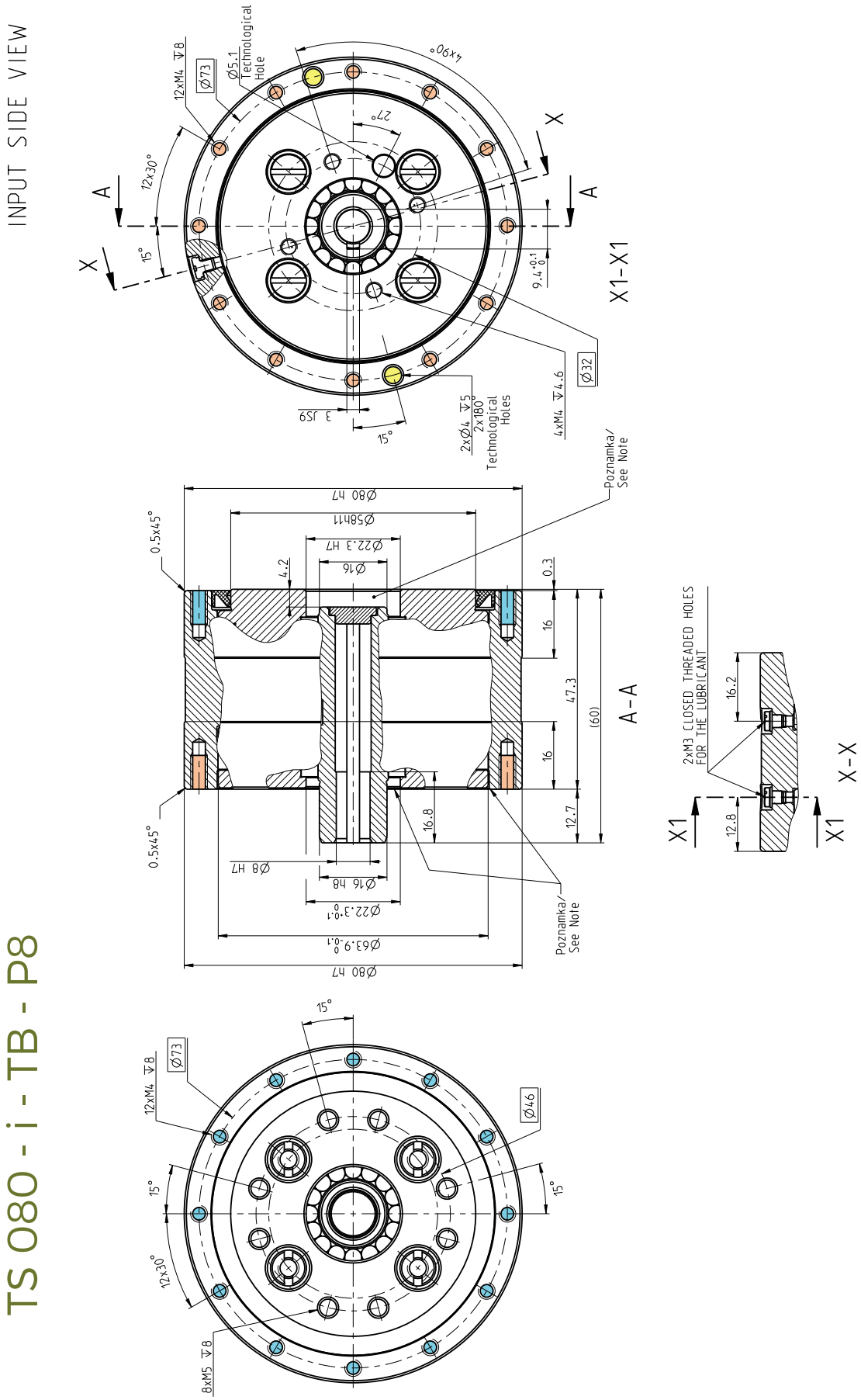

1. Use only standardized components, such as ring seals, bolts, etc.
2. Right to change without prior notice reserved.
3. Unsealed space, see the installation instructions in the TS Catalogue.

SPINEA BY TIMKEN
Courtesy of Steven Engineering, Inc - (800) 258-9200 - sales@steveneng.com - www.stevenengineering.com

TS 110 - i - TB - P14

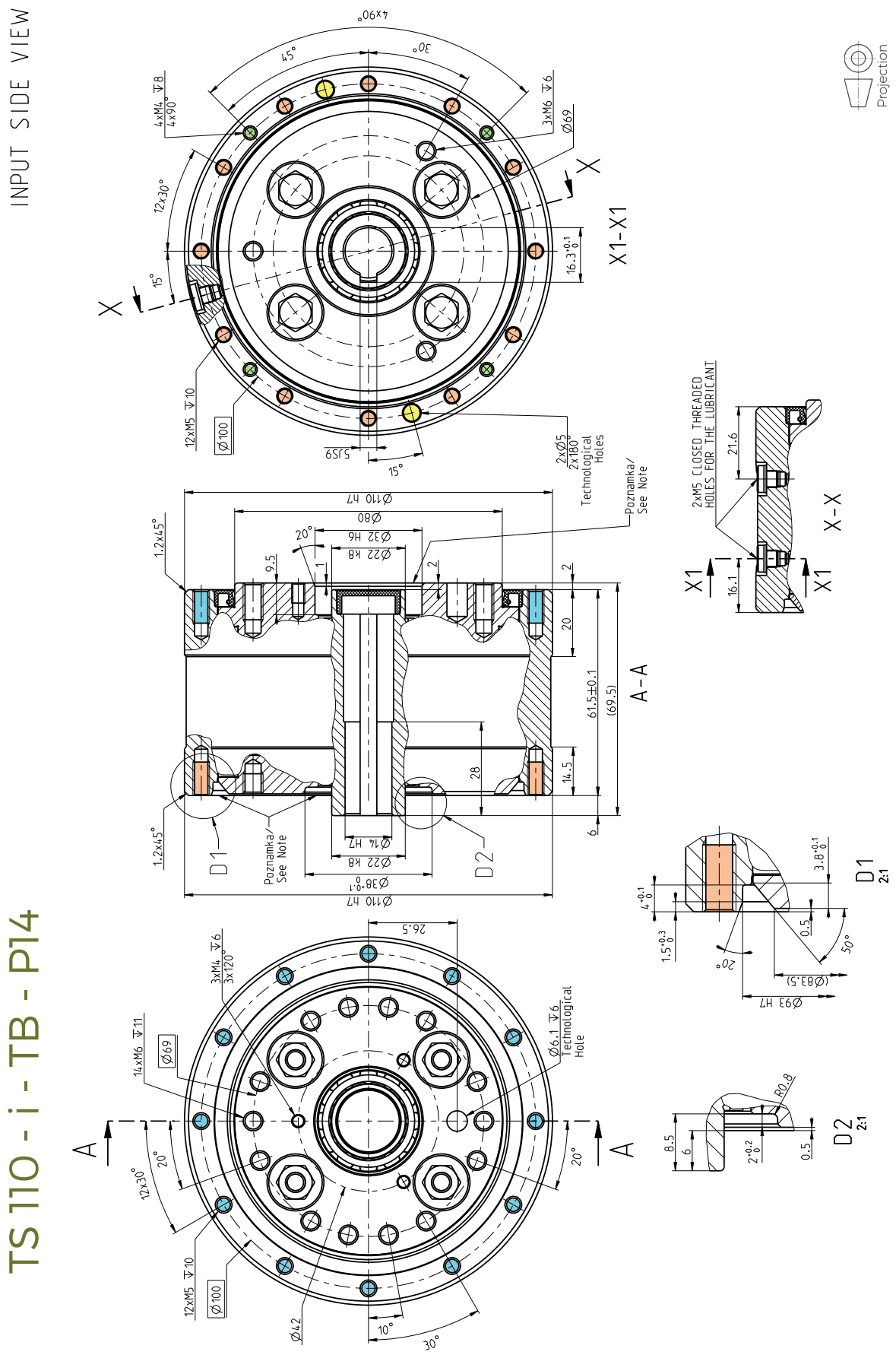

1. Use only standardized components, such as ring seals, bolts, etc.
2. Right to change without prior notice reserved.
3. Unsealed space, see the installation instructions in the TS Catalogue.

SPINEA BY TIMKEN
Courtesy of Steven Engineering, Inc - (800) 258-9200 - sales@steveneng.com - www.stevenengineering.com

TS 140 - i - TB - P19

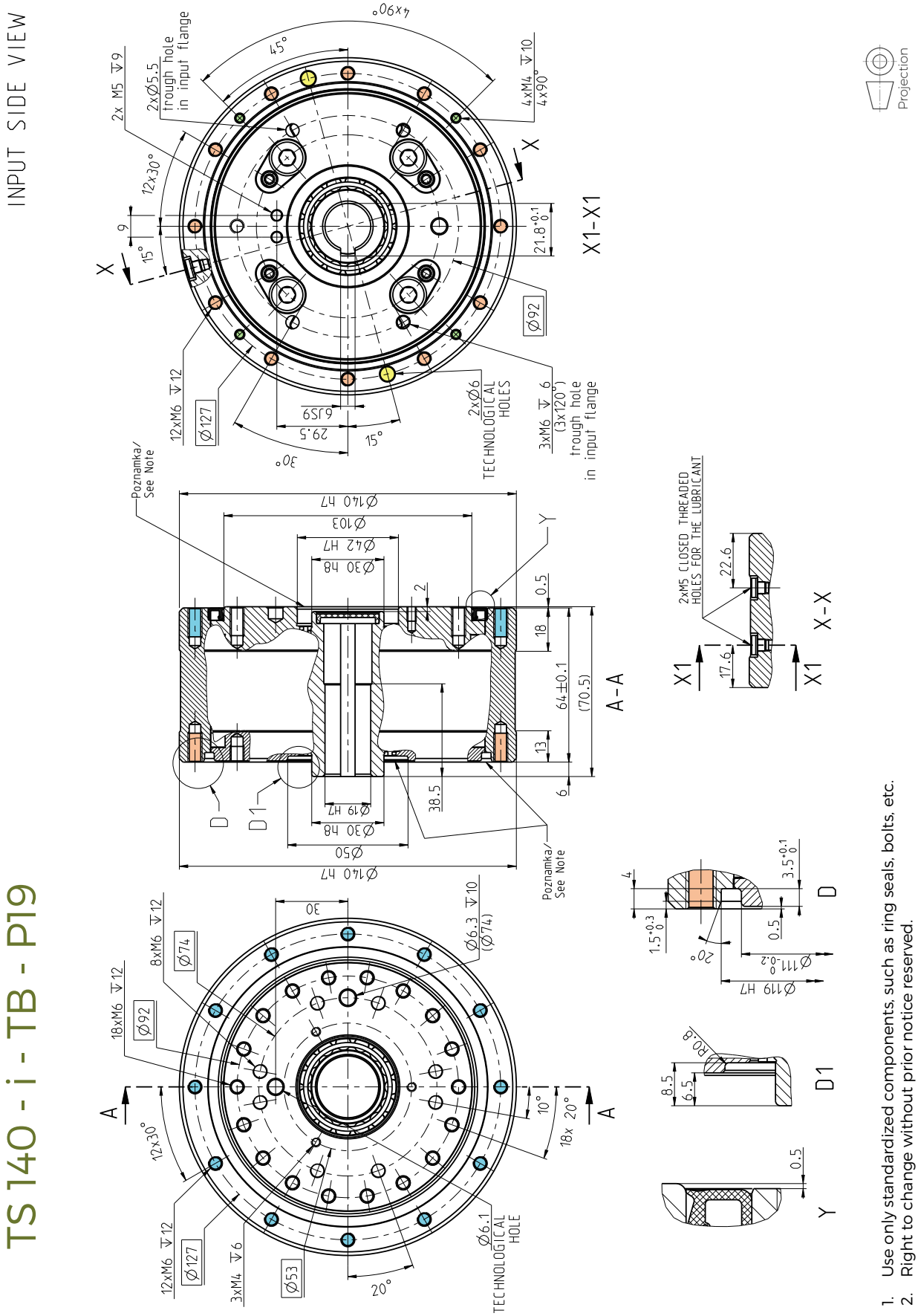

1. Use only standardized components, such as ring seals, bolts, etc.
2. Right to change without prior notice reserved.
3. Unsealed space, see the installation instructions in the TS Catalogue.

SPINEA BY TIMKEN
Courtesy of Steven Engineering, Inc - (800) 258-9200 - sales@steveneng.com - www.stevenengineering.com

TS 170 - i - TC - P24

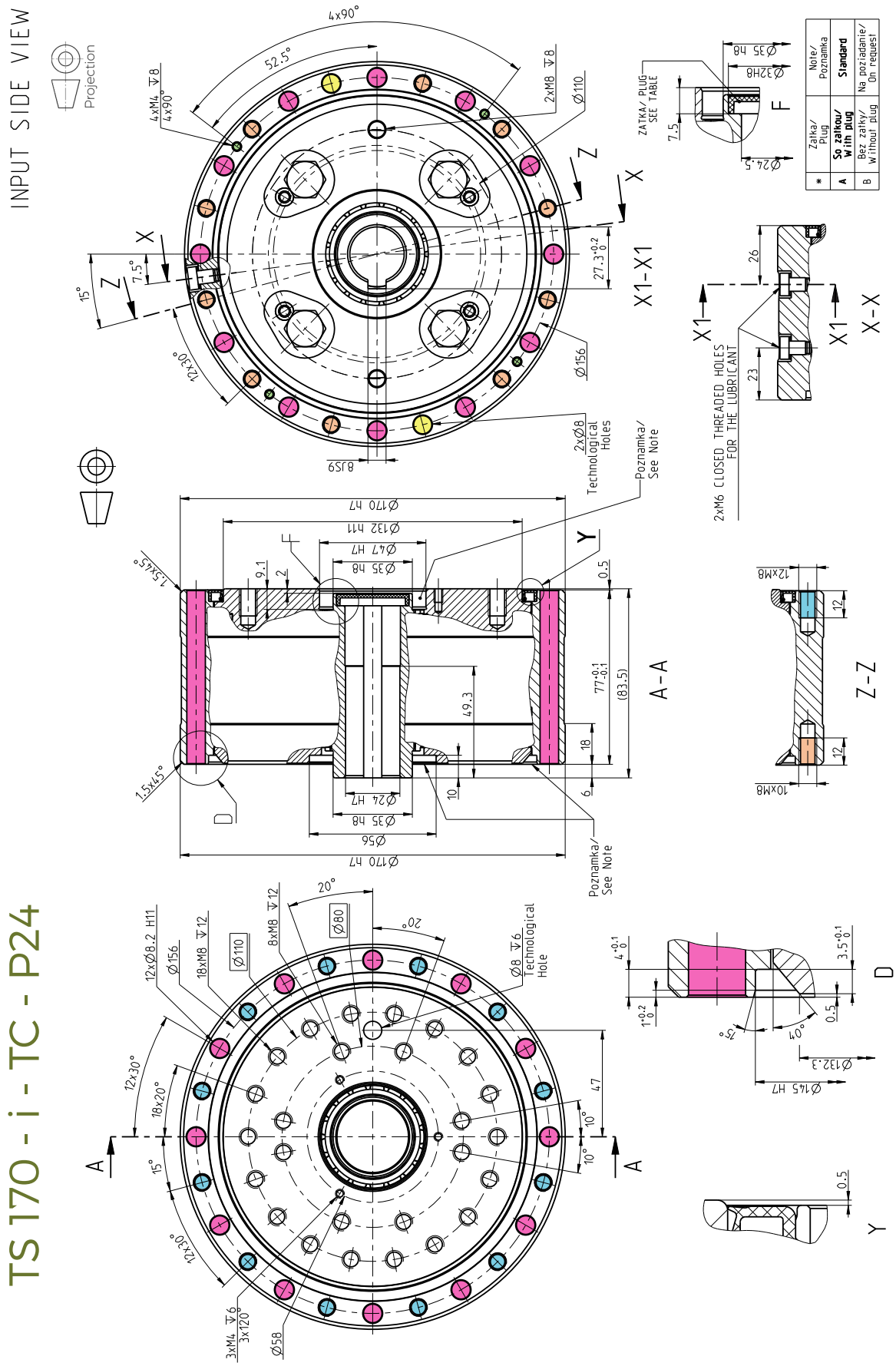

1. Use only standardized components, such as ring seals, bolts, etc.
2. Right to change without prior notice reserved.
3. Unsealed space, see the installation instructions in the TS Catalogue.

T SERIES

Courtesy of Steven Engineering, Inc - (800) 258-9200 - sales@steveneng.com - www.stevenengineering.com

TS 200 - i - TC - P24

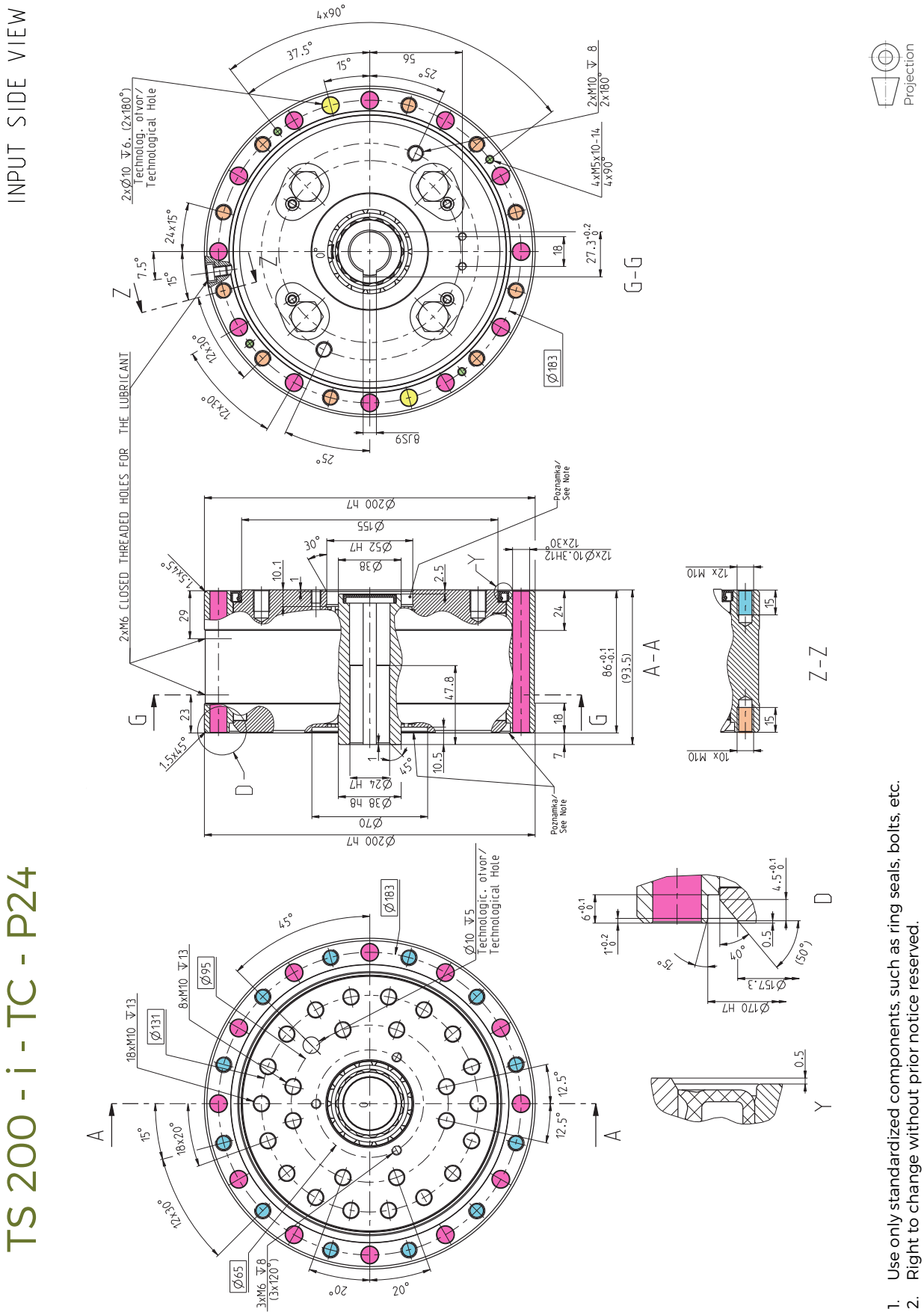

1. Use only standardized components, such as ring seals, bolts, etc.
2. Right to change without prior notice reserved.
3. Unsealed space, see the installation instructions in the TS Catalogue.

SPINEA BY TIMKEN
Courtesy of Steven Engineering, Inc - (800) 258-9200 - sales@steveneng.com - www.stevenengineering.com

TS 240 - i - TC - P28

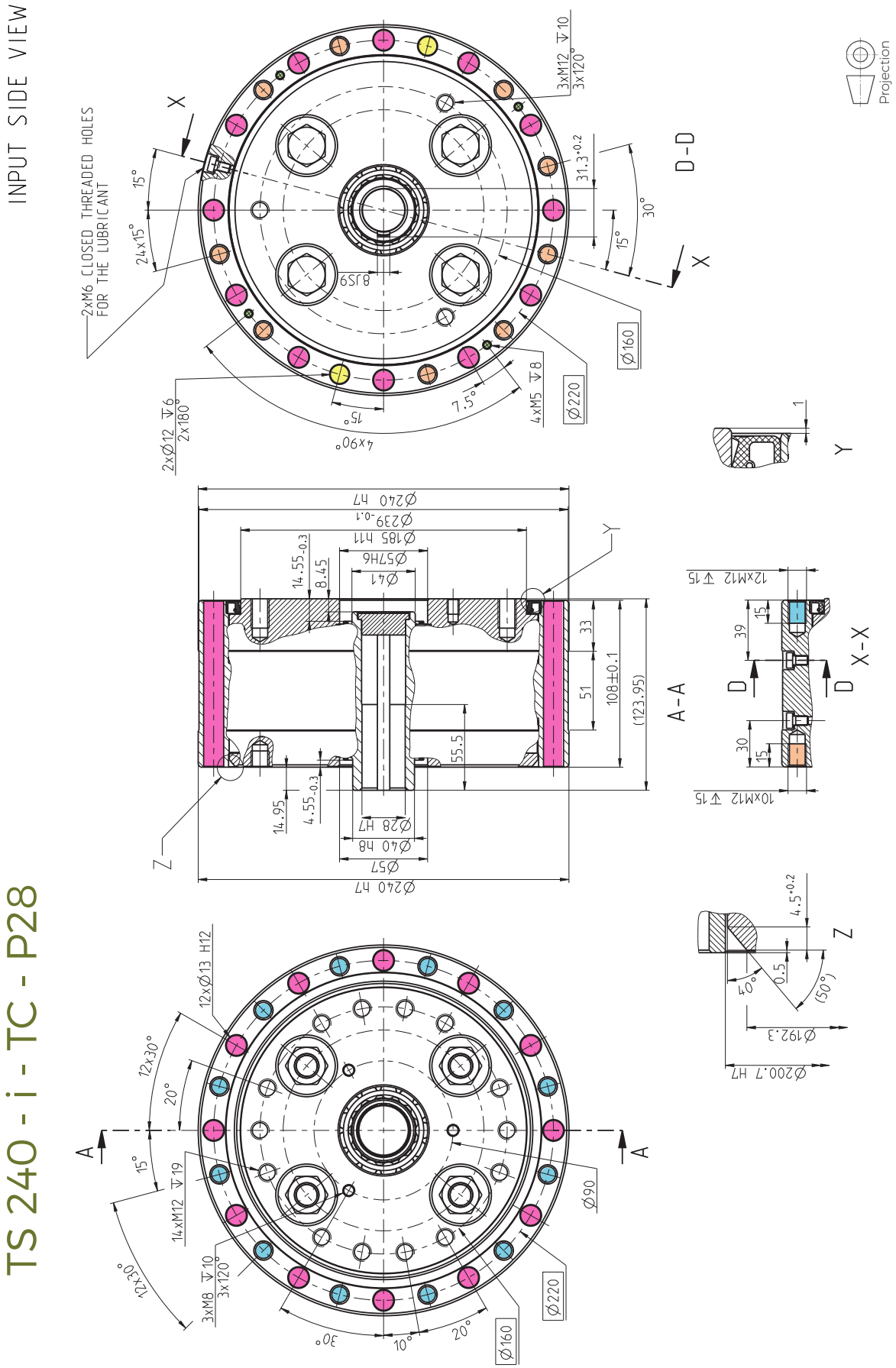

1. Use only standardized components, such as ring seals, bolts, etc.
2. Right to change without prior notice reserved.
3. Unsealed space, see the installation instructions in the TS Catalogue.

T SERIES

Courtesy of Steven Engineering, Inc - (800) 258-9200 - sales@steveneng.com - www.stevenengineering.com

TS 300 - i - TC - P28

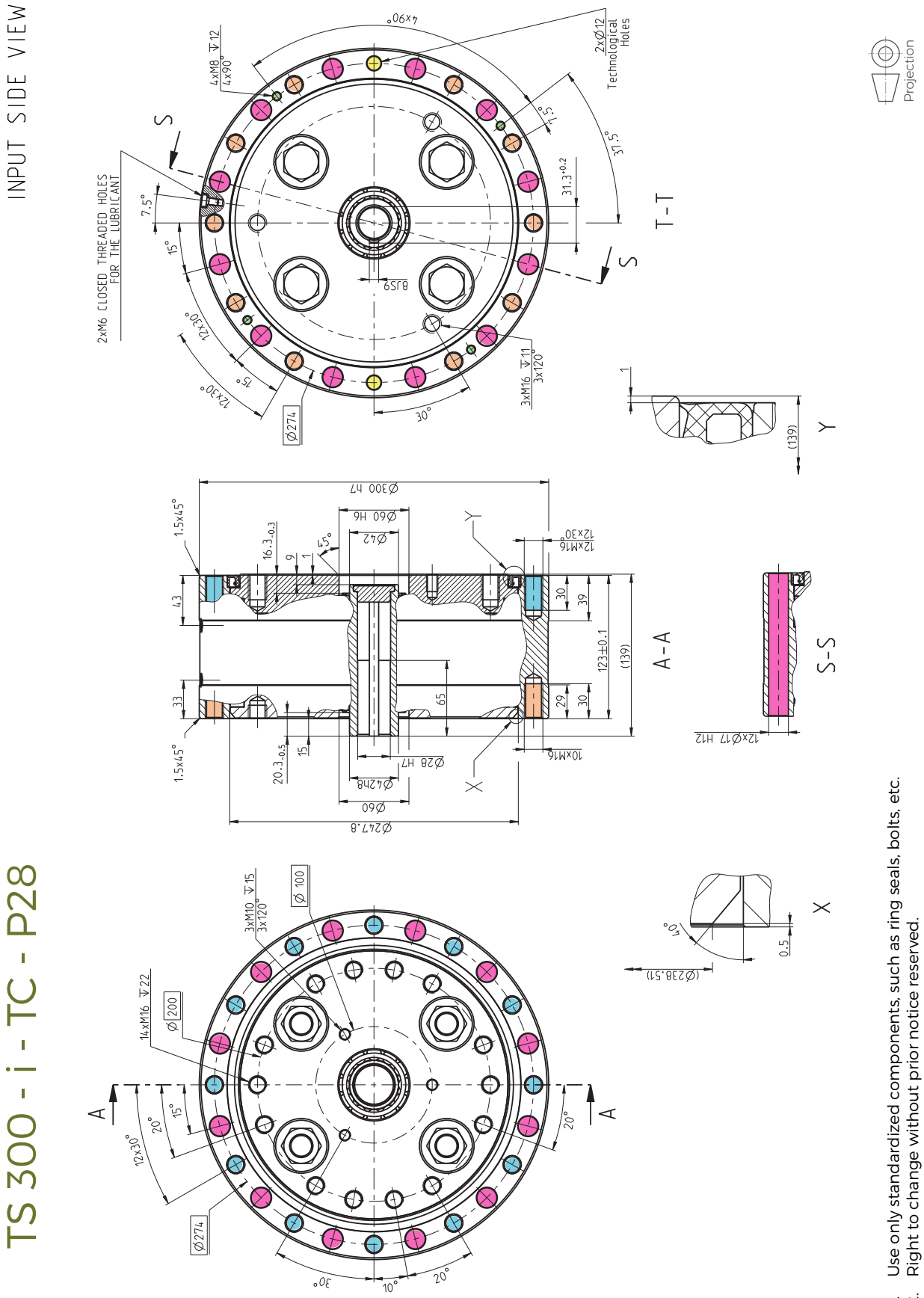

1. Use only standardized components, such as ring seals, bolts, etc.
2. Right to change without prior notice reserved.
3. Unsealed space, see the installation instructions in the TS Catalogue.

SPINEA BY TIMKEN
Courtesy of Steven Engineering, Inc - (800) 258-9200 - sales@steveneng.com - www.stevenengineering.com

TwinSpin®

E SERIES

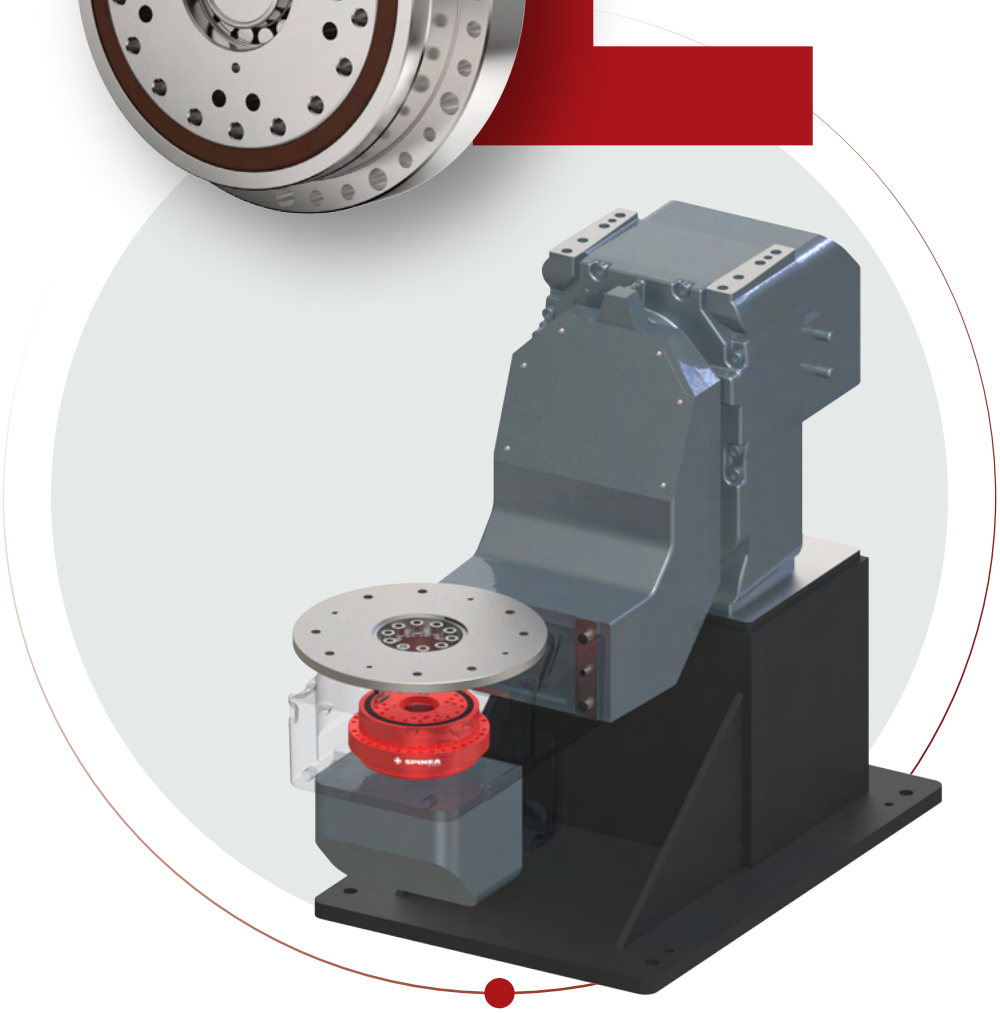

FLANGE HOUSING

TwinSpin® **E** SERIES IS EXCELLENT
IN ROTARY POSITIONERS
AND MANY OTHERS

2.4 E SERIES

Advantages

- **zero- backlash reduction gear**
- **high moment capacity**
- **excellent positioning accuracy and positioning repeatibility**
- **high torsional and tilting stiffness**
- **small dimensions and low weight**
- **high reduction ratios**
- **high efficiency**
- **long lifetime**
- **easy assembly**

The **E series** represents a wide range of TwinSpin® high precision reduction gears with a flange shaped case. The E series high precision reduction gears comprise an accurate reduction mechanism and high-capacity radial and axial cylindrical bearings. This design of reduction gears allows the mounting of the load directly on the output flange or the case without the need for additional bearings. The E series high precision reduction gears are characterized by a modular design, which allows the mounting of desirable motor type to the reduction gear by means of a motor connection flange. The E series includes TwinSpin® high precision reduction gears that are not completely sealed; an inlet flange and a gasket kit have to be used for the sealing. Upon the customer's request, SPINEA® is able to supply a completely sealed reduction gear with a flange according to the customer's motor.

Tab. 2.4a: E series features

Case	Threaded and through holes in the case
Input flange connection	Shaft sealing / adapter flange is offered in the following versions: a) motor connection flange b) sealed input cover c) without flange
Input shaft design	Input shaft is offered in the following versions: a) shaft with a keyway b) according to special request
Installation and operation characteristics	Special for robotic and general automation

Courtesy of Steven Engineering, Inc - (800) 258-9200 - sales@steveneng.com - www.stevenengineering.com

Tab. 2.4b: E series ordering specifications

TS - 200 - 125 - E - P24

Name	Size	Ratio	Series version	Shaft version	
				P (DIN 6885)	S
TS	70	**41**, 75	E	11	•
	80	**37**, 85	E	8	•
	110	33, **67**, 119	E	14	•
	140	33, **69**, 115	E	19	•
	170	33, 59, **125**, 141	E	24	•
	200	49, 63, **125**, 169	E	24	•
	220	55, **125**	E	28	•

Note: An example of the ordering code of the modified TwinSpin® T series reduction gear with a motor flange:
TS200 – 125 –TC– P24 – M235 – P231. The markings M235 and P231 for a specific modification are defined by the manufacturer.

Shaft version

P Shaft with a keyway

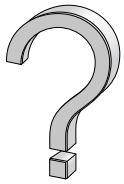

S Special shaft

Courtesy of Steven Engineering, Inc - (800) 258-9200 - sales@steveneng.com - www.stevenengineering.com

Tab. 2.4c: E series rating table

Size	Reduction ratio	Rated output torque	Max. acceleration / deceleration torque	Permissible output torque at emergency stop	Rated input speed	Max. allowable input speed 9)	Tilting stiffness 1) 5)	Torsional stiffness 1) 6)	Max. no-load starting torque 8)	Max. back driving torque 8) 10)
	i	T_R [Nm]	T_{acc} [Nm]	T_{em} [Nm]	n_R [rpm]	n_{max} [rpm]	M_t [Nm/arcmin]	k_t [Nm/arcmin]	[Nm]	[Nm]
TS 070	**41**	50	100	250	2 000	4 000	40	8	0.30	11
	75					5 000			0.14	13
TS 080	**37**	78	156	390	2 000	4 000	70	10	0.35	14
	85					5 000			0.18	16
TS 110	33	122	244	610	2 000	3 500	115	24	0.35	24
	67					3 900			0.35	28
	119					4 500			0.20	33
TS 140	33	268	670	1 340	2 000	3 000	380	62	0.60	40
	69					4 500			0.40	50
	115								0.35	65
TS 170	33	495	1 237	2 475	2 000	3 000	1 100	110	2.00	75
	59					3 500			2.00	85
	125					3 900			1.20	125
	141					4 000			0.95	125
TS 200	49	890	2 225	4 450	2 000	2 500	1 300	200	1.90	80
	63					3 500			1.80	90
	125					4 000			1.70	200
	169					4 500			0.90	210
TS 220	55	1 250	3 125	6 250	2 000	2 400	1 900	310	2.00	75
	125					3 500			1.50	220

RIGHT TO CHANGE WITHOUT PRIOR NOTICE RESERVED

1) Mean statistical value. For further information see chapter Torsional stiffness, Tilting stiffness.
2) Load at output speed 15 rpm.
3) Moment $M_{c\,max}$ value for F_a=0. If $F_a \neq 0$, see chapter 3.5.
4) Axial force F_a max value for M_c=0. If $M_c \neq 0$, see chapter 3.5.
5) The parameter depends on the high precision reduction gear version.
6) The parameter depends on the version of the high precision reduction gear, ratio and lost motion.
7) The parameter values are informative. Exact value depends on the specific version of the high precision reduction gear.
8) Temperatures of the high precision reduction gear lobelow than 20°C will cause higher no-load starting or back driving torque.
9) Instantaneous speed peak that may occur within the working cycle.
10) Valid for unsealed version of the high precision reduction gear.

SPINEA BY TIMKEN

Courtesy of Steven Engineering, Inc - (800) 258-9200 - sales@steveneng.com - www.stevenengineering.com

Tab. 2.4c: E series rating table - continued

Size	Reduction ratio	Max. lost motion	Average angular transmission error 1) 6)	Hysteresis	Max. moment 2) 3)	Rated radial force 2)	Max. axial force 2) 4)	Input inertia 7)	Weight 7)
	i	LM [arcmin]	ATE [arcsec]	H [arcmin]	$M_{c\,max}$ [Nm]	F_{rR} [kN]	$F_{a\,max}$ [kN]	I [10^{-4} kgm²]	m [kg]
TS 070	**41**	<1.5	±30	<1.5	142	2.8	4.1	0.061	1
	75								
TS 080	**37**	<1.5	±30	<1.5	280	4.8	6.9	0.03	1.6
	85								
TS 110	33	<1.0	±17	<1.0	740	9.3	13.1	0.16	3.7
	67								
	119								
TS 140	33	<1.0	±17	<1.0	1 160	11.5	17	0.67	5.8
	69								
	115								
TS 170	33	<1.0	±17	<1.0	2 430	19.2	27.9	1.15	10.8
	59								
	125								
	141								
TS 200	49	<1.0	±15	<1.0	3 300	21.1	31.7	2.6	17.2
	63								
	125								
	169								
TS 220	55	<1.0	±15	<1.0	4 400	22.5	35.5	4.8	22.4
	125								

IMPORTANT NOTES:

- Instantaneous speed peak that may occur within the working cycle.
- Note please the temperature on the gear case that should not exceed 60°C.
- Load values in the table are valid for the nominal life of L_{10} = 6 000 [Hrs].
- High precision reduction gears are preferred for intermittent cycles (S3-S8); the output speed in applications is an inverted-variable. Continuous mode cycle (S1) should be consulted with the manufacturer..
- Dimensional pictures of the E series reduction gears are listed in the catalogue without sealing.
- Sealing options are described in the chapter Assembly instructions.
- Please consult maximum speed in a duty cycle with the manufacturer.
- Values in the table refer to nominal operating temperature.

The ratios highlighted in bold are recommended by SPINEA® as optimal versions in terms of price and delivery.

Courtesy of Steven Engineering, Inc - (800) 258-9200 - sales@steveneng.com - www.stevenengineering.com

TS 070 – i – E – P 11

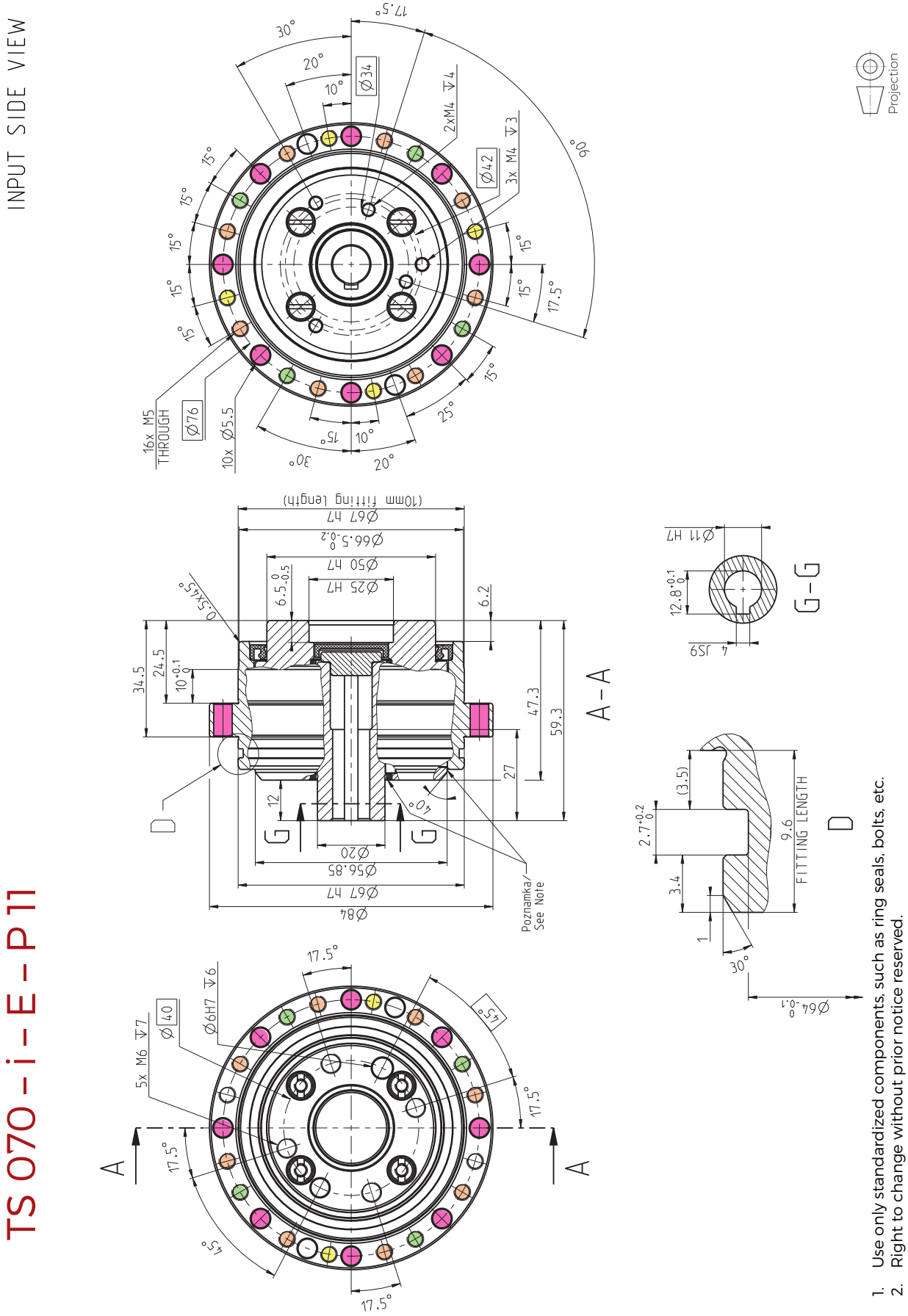

1. Use only standardized components, such as ring seals, bolts, etc.
2. Right to change without prior notice reserved.
3. Unsealed space, see the installation instructions in the TS Catalogue.

SPINEA BY TIMKEN
Courtesy of Steven Engineering, Inc - (800) 258-9200 - sales@steveneng.com - www.stevenengineering.com

TS 080 – i – E – P 8

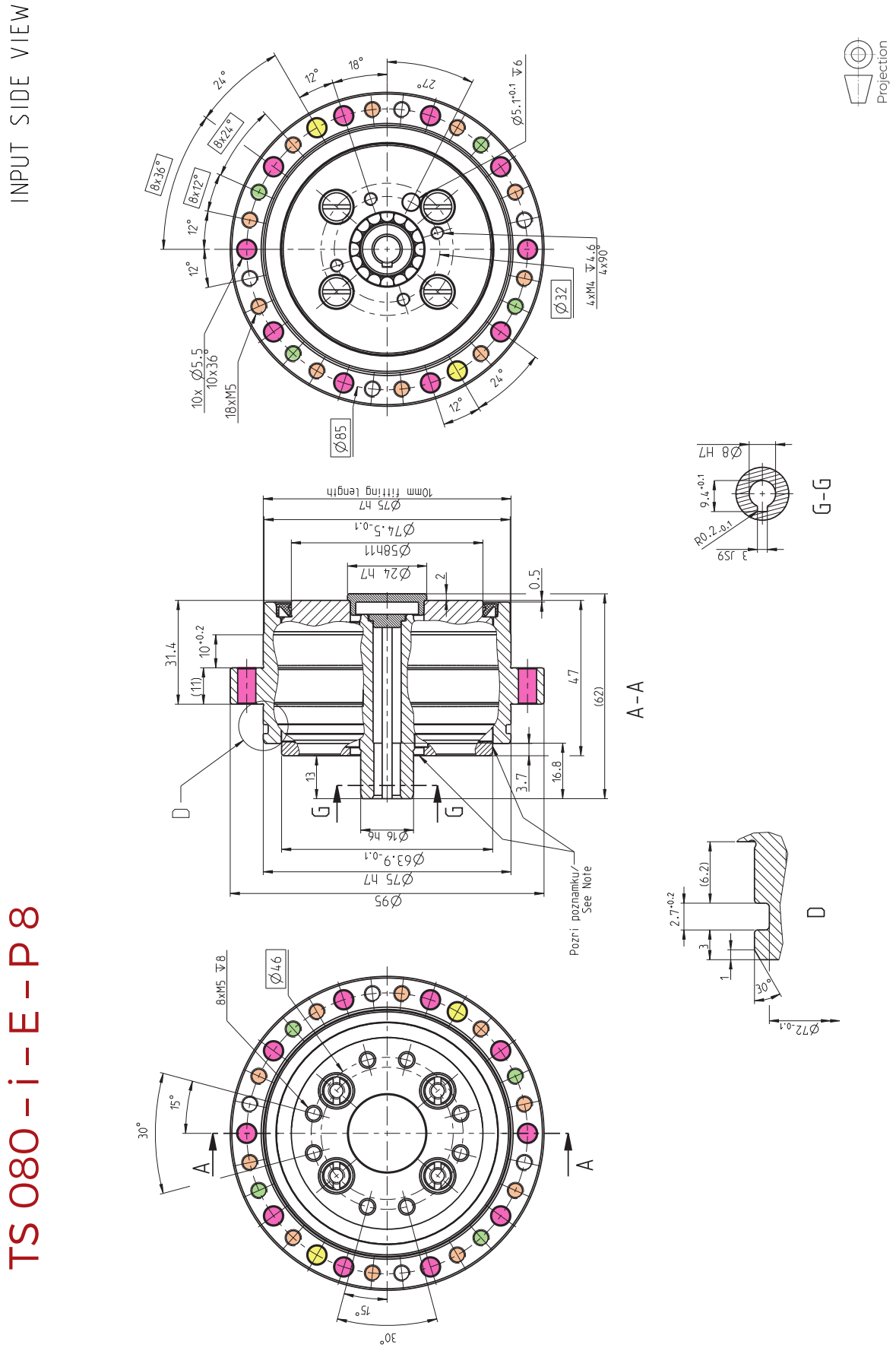

1. Use only standardized components, such as ring seals, bolts, etc.
2. Right to change without prior notice reserved.
3. Unsealed space, see the installation instructions in the TS Catalogue.

E SERIES

SPINEA BY TIMKEN
Courtesy of Steven Engineering, Inc - (800) 258-9200 - sales@steveneng.com - www.stevenengineering.com

TS 110 – i – E – P 14

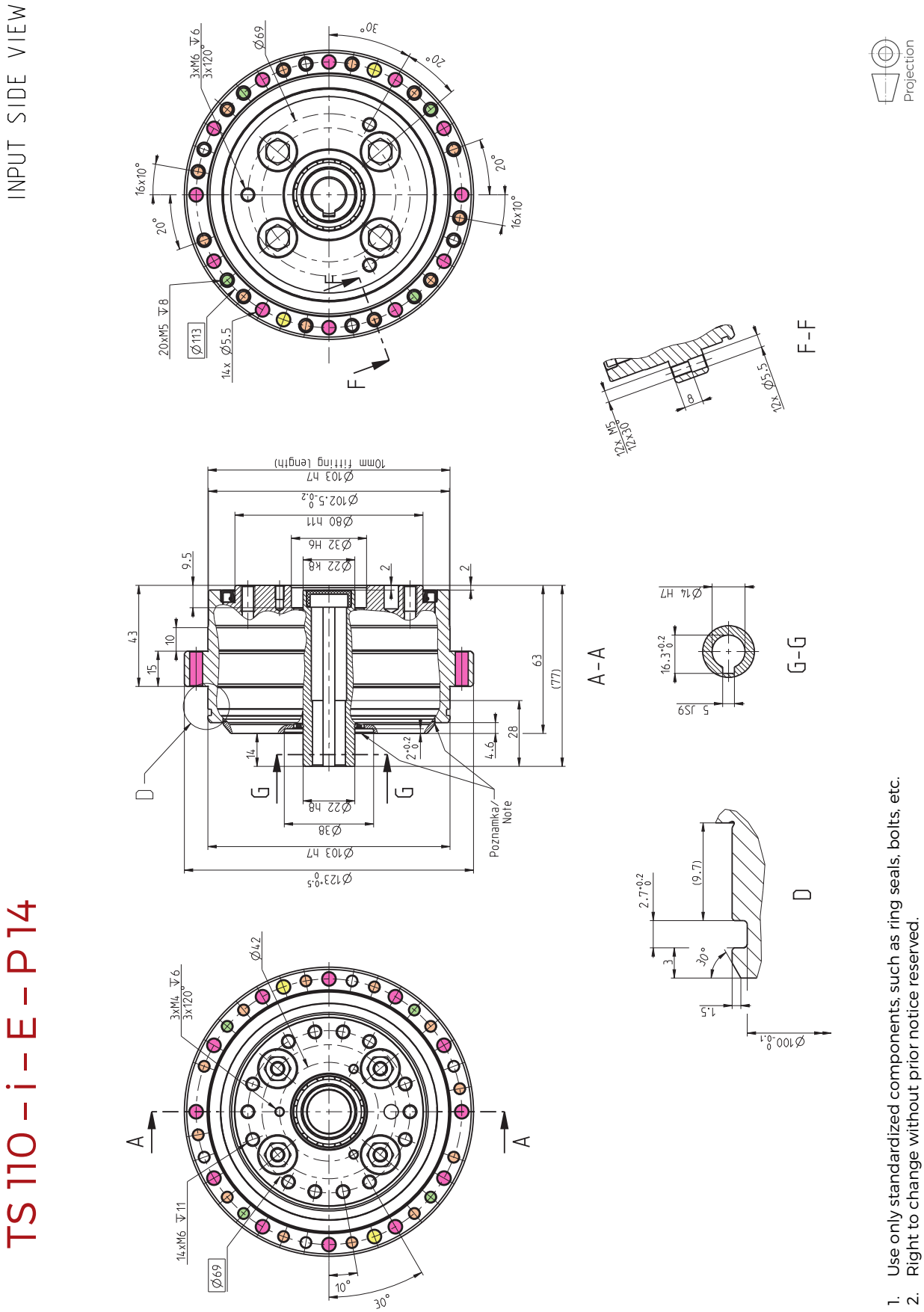

1. Use only standardized components, such as ring seals, bolts, etc.
2. Right to change without prior notice reserved.
3. Unsealed space, see the installation instructions in the TS Catalogue.

SPINEA BY TIMKEN
Courtesy of Steven Engineering, Inc - (800) 258-9200 - sales@steveneng.com - www.stevenengineering.com

TS 140 – i – E – P 19

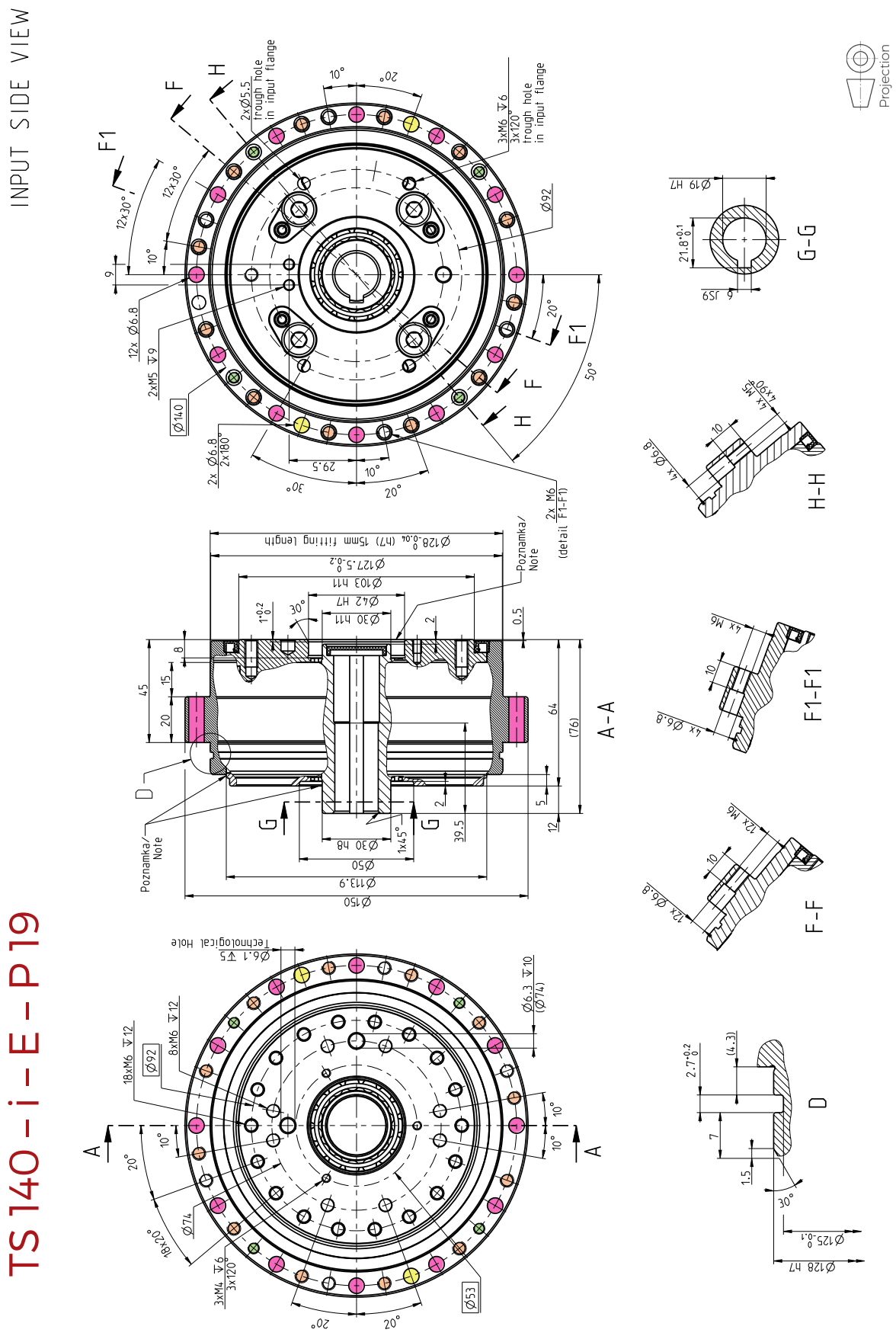

1. Use only standardized components, such as ring seals, bolts, etc.
2. Right to change without prior notice reserved.
3. Unsealed space, see the installation instructions in the TS Catalogue.

E SERIES

SPINEA BY TIMKEN
Courtesy of Steven Engineering, Inc - (800) 258-9200 - sales@steveneng.com - www.stevenengineering.com

TS 170 – i – E – P 24

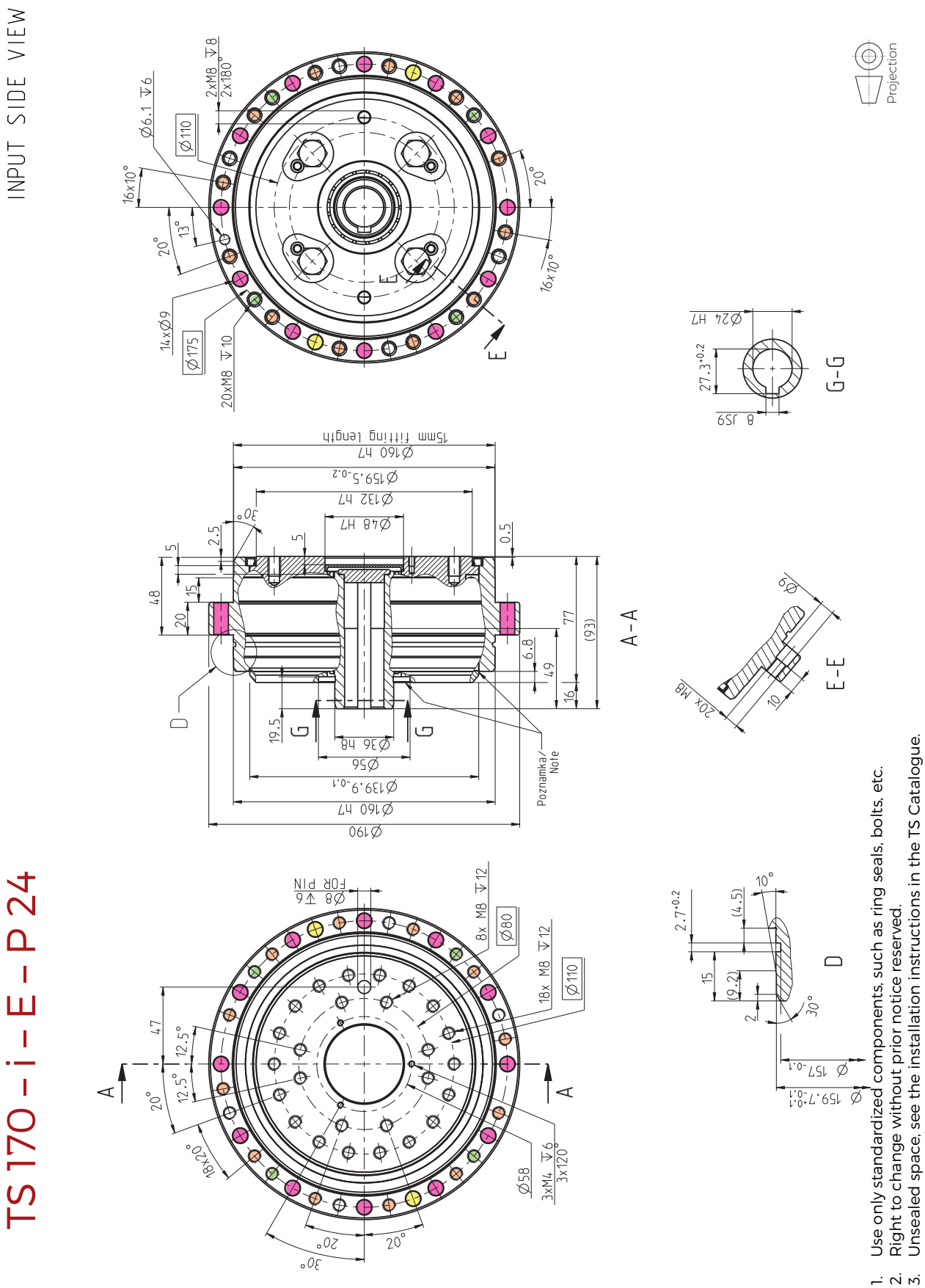

1. Use only standardized components, such as ring seals, bolts, etc.
2. Right to change without prior notice reserved.
3. Unsealed space, see the installation instructions in the TS Catalogue.

SPINEA BY TIMKEN
Courtesy of Steven Engineering, Inc - (800) 258-9200 - sales@steveneng.com - www.stevenengineering.com

TS 200 – i – E – P 24

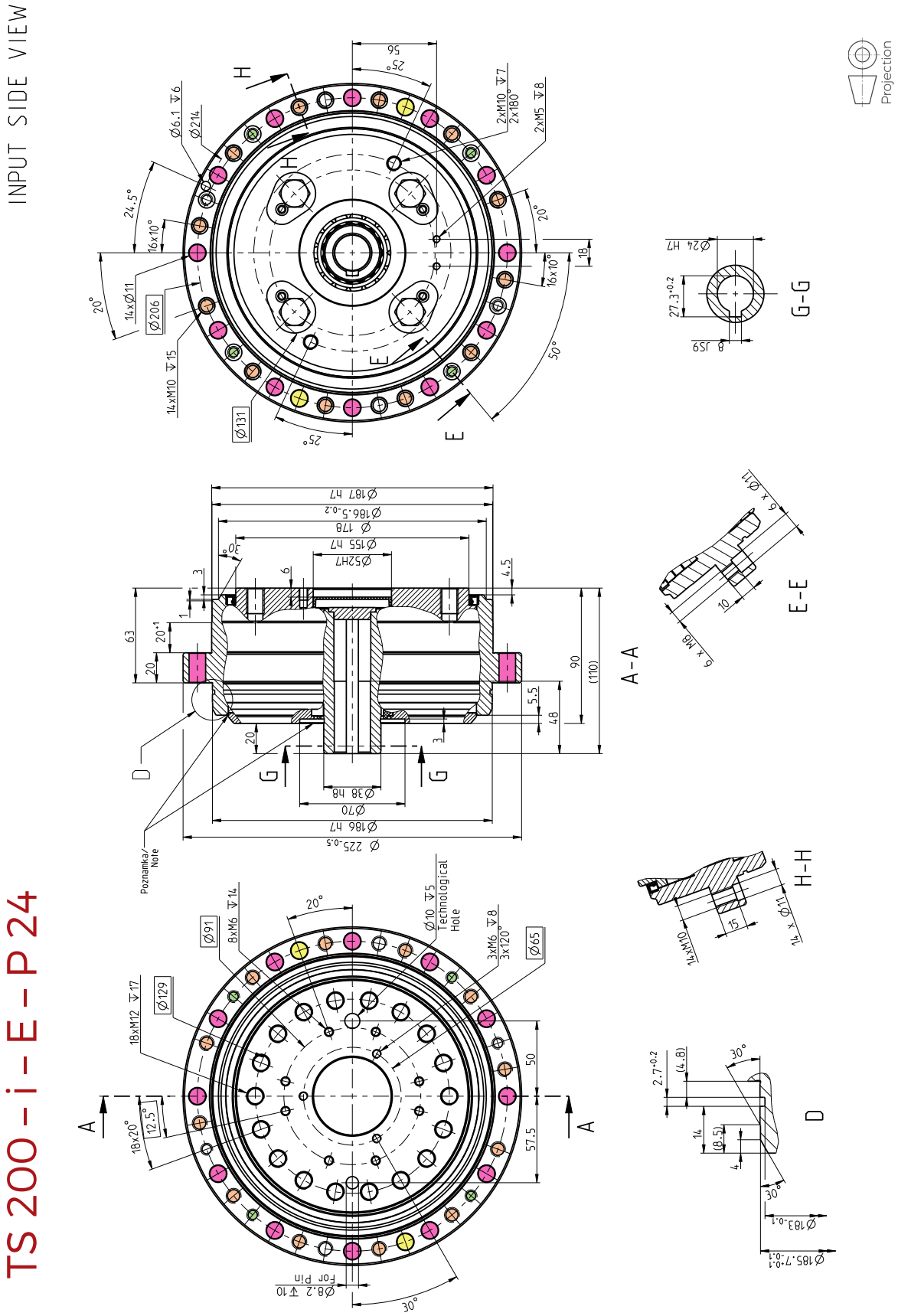

1. Use only standardized components, such as ring seals, bolts, etc.
2. Right to change without prior notice reserved.
3. Unsealed space, see the installation instructions in the TS Catalogue.

E SERIES

SPINEA BY TIMKEN
Courtesy of Steven Engineering, Inc - (800) 258-9200 - sales@steveneng.com - www.stevenengineering.com

TS 220 – i – E – P 28

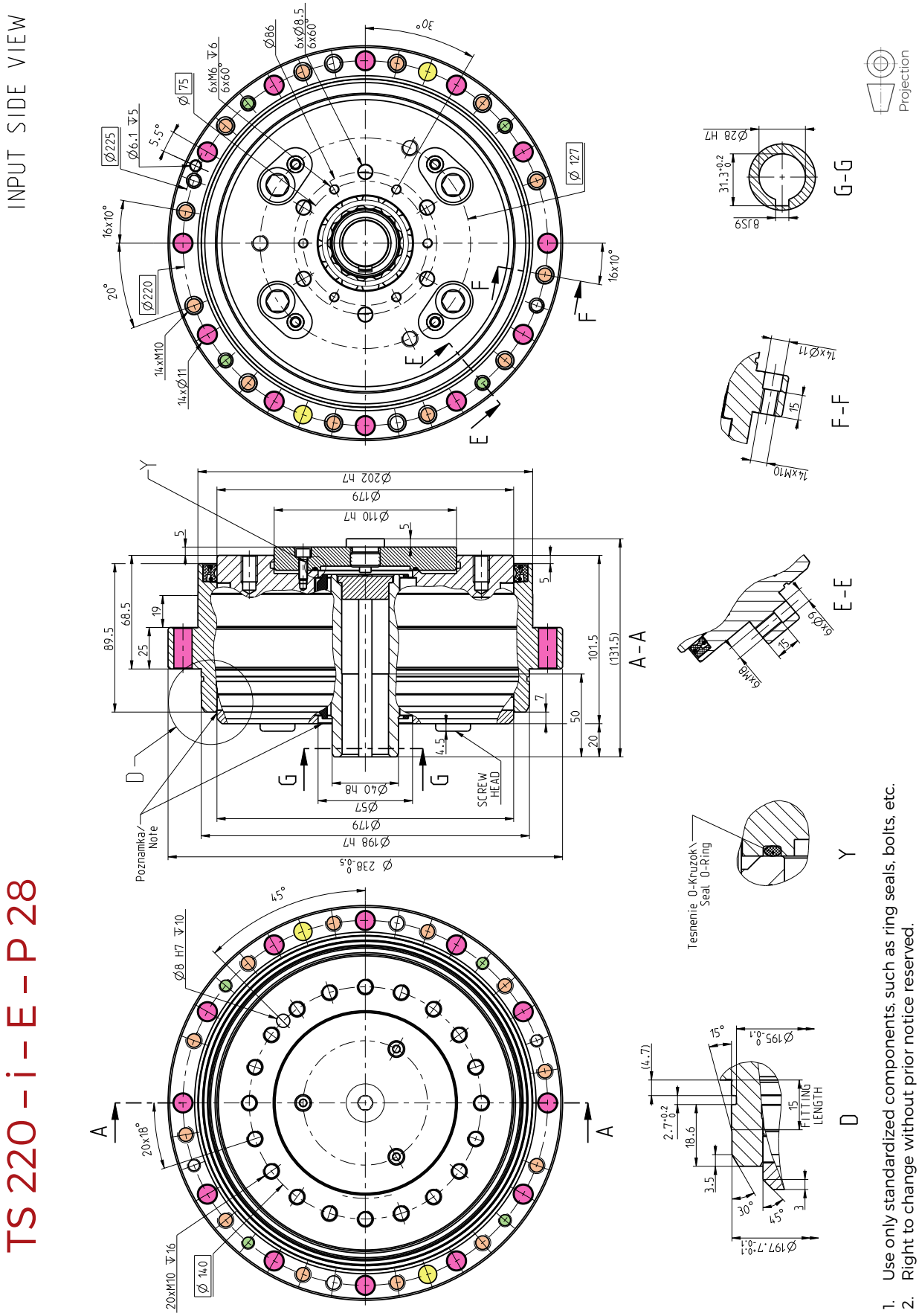

1. Use only standardized components, such as ring seals, bolts, etc.
2. Right to change without prior notice reserved.
3. Unsealed space, see the installation instructions in the TS Catalogue.

SPINEA BY TIMKEN
Courtesy of Steven Engineering, Inc - (800) 258-9200 - sales@steveneng.com - www.stevenengineering.com

TwinSpin®

H SERIES

HOLLOW SHAFT

TwinSpin® **H** SERIES IS EXCELLENT
IN BOTH RADARS
AND MANY OTHERS

2.5 H SERIES

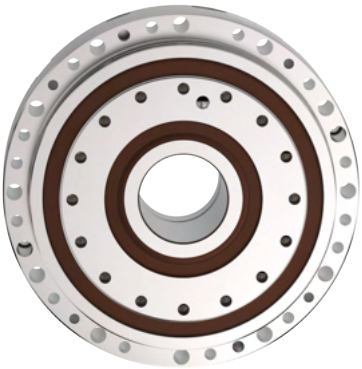

Advantages

- **large input shaft hole diameter**
- **fully sealed**
- **zero-backlash reduction gears**
- **high moment capacity**
- **excellent positioning accuracy and positioning repeatability**
- **high torsional and tilting stiffness**
- **small dimensions and low weight**
- **high reduction ratios**
- **high efficiency**
- **long lifetime**
- **easy assembly**

The **H series** represents TwinSpin® high precision reduction gears with through-holes in the shafts, also known as the hollow-shaft version. Cables, tubes with compressed air, drive shafts etc. can be led through the hole in the shaft of the gear. The H series is completely sealed and filled with grease for lifetime. The H series high precision reduction gears comprise an accurate reduction mechanism and high-capacity radial and axial cylindrical bearings. This design of the reduction gears allows the load mounting directly on the output flange or case without the need for additional bearings.

Tab. 2.5a: H series features

Case	Threaded and through holes in the case
Input flange connection	Completely sealed reduction gear
Input shaft design*	Input shaft is offered in the following versions: a) hollow shaft b) according to special request
Installation and operation characteristics	Hollow-shaft reduction gears. Large hole in the input shaft allows cables, tubes or an additional shaft to pass through the reduction gear. Suitable for applications where the input shaft rotation is achieved by using a tooth belt or similar arrangement.

*On request

SPINEA BY TIMKEN
Courtesy of Steven Engineering, Inc - (800) 258-9200 - sales@steveneng.com - www.stevenengineering.com

Tab. 2.5b: H series ordering specifications

TS - 200 - 125 - H - H52

Name	Size	Ratio	Series version	Shaft version	
				H	S[1)]
TS	70	75	H	13	•
	140	**69**, 115	H	36	•
	170	**69**, 125	H	42, **46**	•
	200	**63**, 125	H	52, **56**	•
	220	**55**, 125	H	62, **65**	•

Note: Example of the ordering code of the modified H series TwinSpin® reduction gear with a motor flange:
TS200 – 125 –H– H56 – M235 – P231. The marks M235 and P231 for specific modification are defined by the manufacturer.
1) Upon request

Shaft version

H Hollow shaft

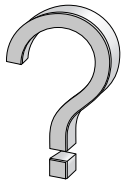

S Special shaft

Courtesy of Steven Engineering, Inc - (800) 258-9200 - sales@steveneng.com - www.stevenengineering.com

Tab. 2.5c: H series rating table

Size	Reduction ratio	Shaft inside diameter	Rated output torque	Max. acceleration / deceleration torque	Permissible output torque at emergency stop	Rated input speed	Max. allowable input speed 9)	Tilting stiffness 1) 5)	Torsional stiffness 1) 6)	Max. no-load starting torque 8)	Max. back driving torque 8)
	i	d	T_R [Nm]	T_{acc} [Nm]	T_{em} [Nm]	n_R [rpm]	n_{max} [rpm]	M_t [Nm/arcmin]	k_t [Nm/arcmin]	[Nm]	[Nm]
TS 070	75	13	50	100	250	2 000	5 500	35	7.5	0.3	13
TS 140	**69**	**36**	200	500	1 000	2 000	3 500	340	55	1.6	110
	115						4 500			1.5	130
TS 170	**69**	42	420	1 050	2 100	2 000	3 200	1 100	110	2.5	180
		46		825	1 650						
	125	42		1 050	2 100		3 700			2.2	240
		46		825	1 650						
TS 200	**63**	52	712	1 780	3 560	2 000	2 700	2 000	200	3	250
		56		1 100	2 200						
	125	52		1 780	3 560		3 700			2.5	300
		56		1 100	2 200						
TS 220	**55**	62	1 100	2 750	5 500	2 000	2 400	2 400	290	3.2	170
		65		2 000	4 000						
	125	62		2 750	5 500		3 400			3	350
		65		2 000	4 000						

RIGHT TO CHANGE WITHOUT PRIOR NOTICE RESERVED

1) Mean statistical value. For further information see chapter Torsional stiffness, Tilting stiffness.
2) Load at output speed 15 rpm.
3) Moment $M_{c\,max}$ value for F_a=0. If F_a ≠0, see chapter 3.5.
4) Axial force F_a max value for M_c=0. If M_c≠0, see chapter 3.5.
5) The parameter depends on the high precision reduction gear version.
6) The parameter depends on the version of the high precision reduction gear, ratio and lost motion.
7) The parameter values are informative. Exact value depends on specific version of the high precision reduction gear.
8) Temperatures of the high precision reduction gear below 20°C will cause higher no-load starting or back driving torque.
9) Instantaneous speed peak that may occur within the working cycle.

SPINEA BY TIMKEN

Courtesy of Steven Engineering, Inc - (800) 258-9200 - sales@steveneng.com - www.stevenengineering.com

Tab. 2.5c: H series rating table - continued

Size	Reduction ratio	Max. lost motion	Average angular transmission error 1) 6)	Hysteresis	Max. moment 2) 3)	Rated radial force 2)	Max. axial force 2) 4)	Input inertia 7)	Weight 7)
	i	LM [arcmin]	ATE [arcsec]	H [arcmin]	$M_{c\,max}$ [Nm]	F_{rR} [kN]	$F_{a\,max}$ [kN]	I [10^{-4} kgm²]	m [kg]
TS 070	75	<1.5	±30	<1.5	142	2.8	4.1	0.061	1
TS 140	**69**	<1.0	±17	<1.0	1 160	11.5	17	3.6	7.5
	115								
TS 170	**69**	<1.0	±17	<1.0	2 000	19.2	27.9	4.8	11.6
	125								
TS 200	**63**	<1.0	±15	<1.0	3 300	21.5	31.7	18.2	20
	125								
TS 220	**55**	<1.0	±15	<1.0	4 400	22.5	35.5	31	26
	125								

IMPORTANT NOTES:

- Instantaneous speed peak that may occur within the working cycle.
- Note please the temperature on the gear case that should not exceed 60°C.
- Load values in the table are valid for the nominal life of L_{10} = 6 000 [Hrs].
- High precision reduction gears are preferred for intermittent cycles (S3-S8); the output speed in applications is an inverted-variable. Continuous mode cycle (S1) should be consulted with the manufacturer.
- Please consult maximum speed in a duty cycle with the manufacturer.
- Values in the table refer to nominal operating temperature.

The ratios highlighted in bold are recommended by SPINEA® as optimal versions in terms of price and delivery.

Courtesy of Steven Engineering, Inc - (800) 258-9200 - sales@steveneng.com - www.stevenengineering.com

TS 070 – i – H – H 13

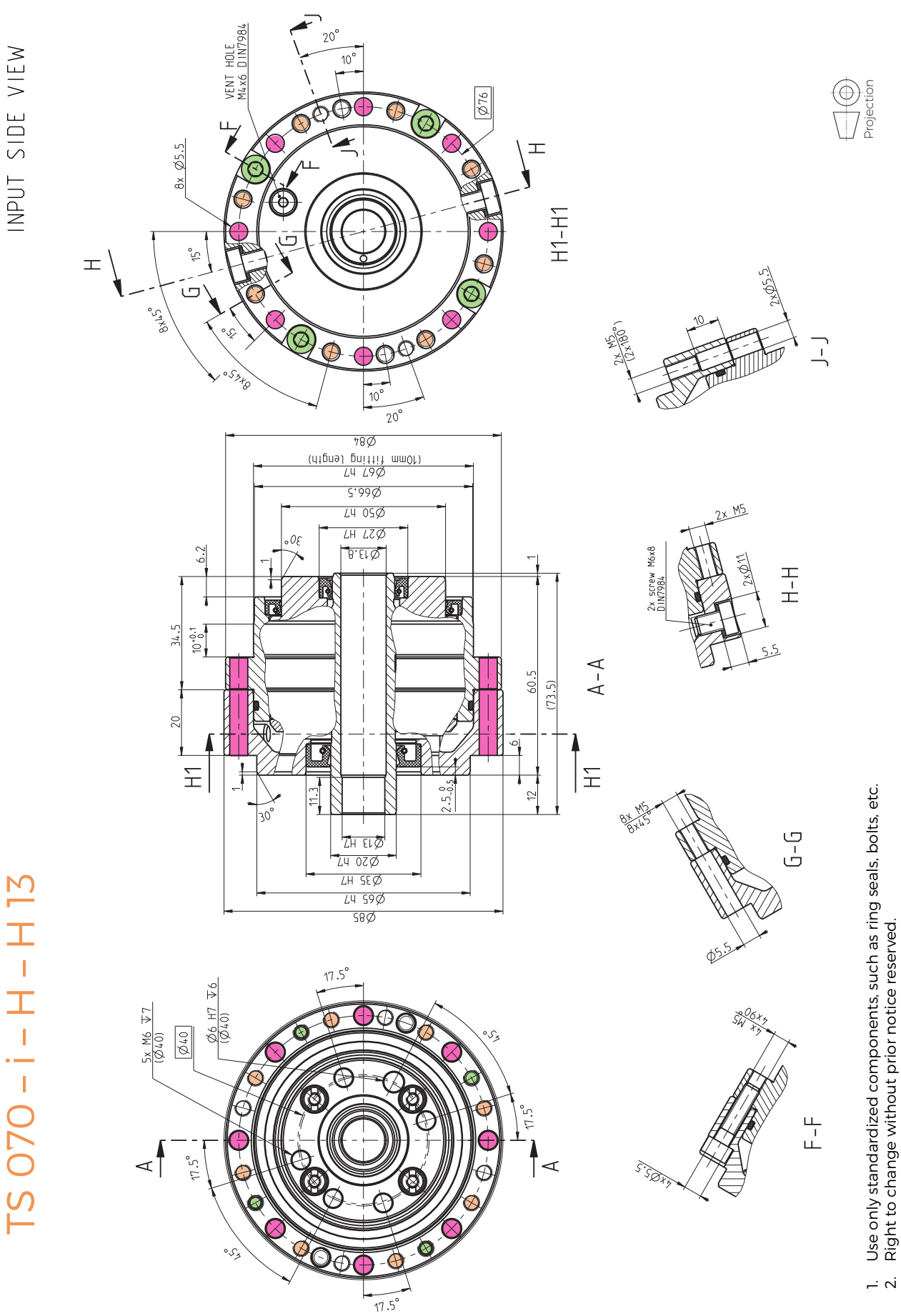

TS 070 – i – H – H 13

1. Use only standardized components, such as ring seals, bolts, etc.
2. Right to change without prior notice reserved.

SPINEA BY TIMKEN
Courtesy of Steven Engineering, Inc - (800) 258-9200 - sales@steveneng.com - www.stevenengineering.com

TS 140 – i – H– H 36

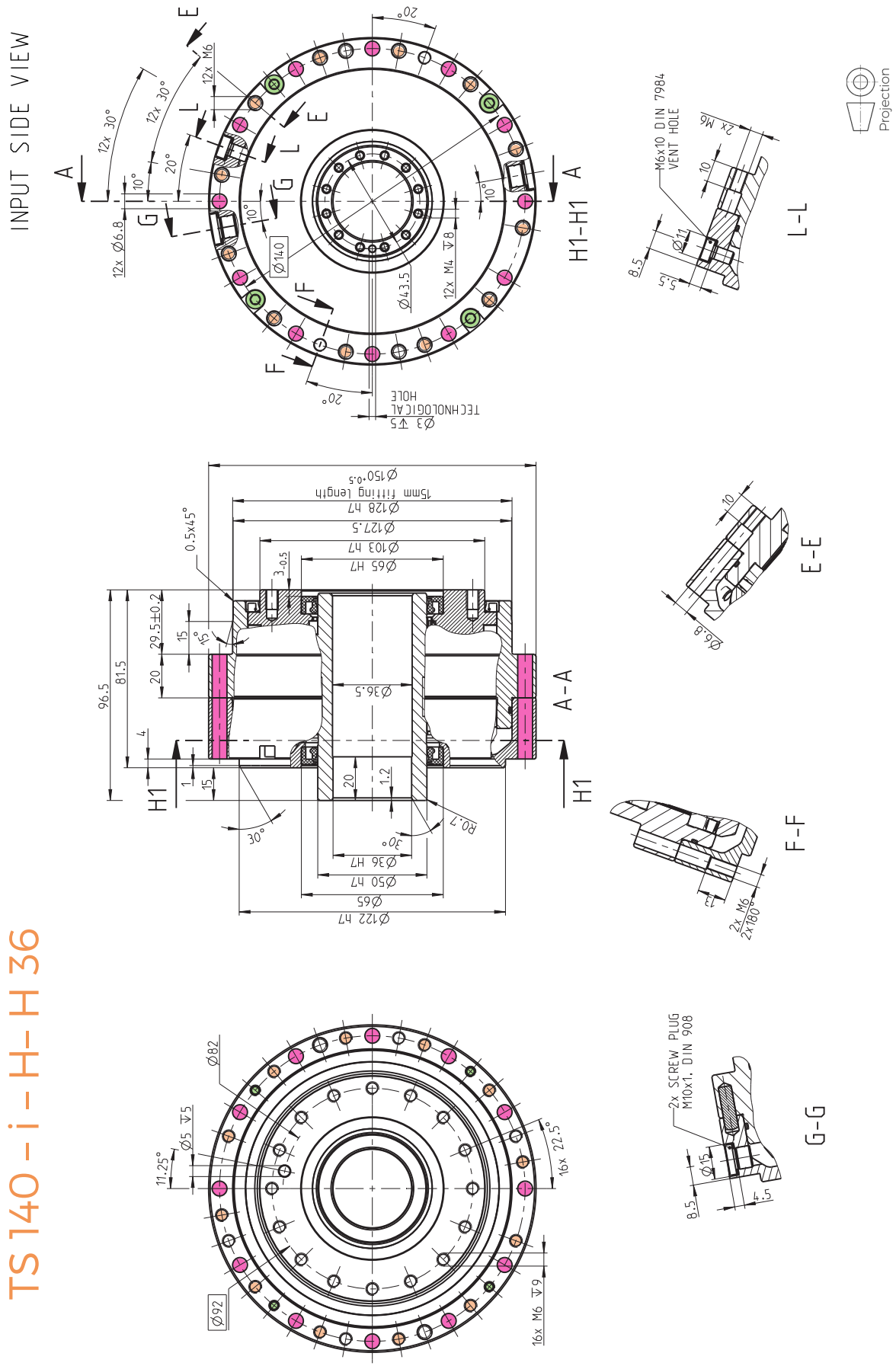

TS 140 – i – H– H 36

1. Use only standardized components, such as ring seals, bolts, etc.
2. Right to change without prior notice reserved.

SPINEA BY TIMKEN
Courtesy of Steven Engineering, Inc - (800) 258-9200 - sales@steveneng.com - www.stevenengineering.com

TS 170 – i –H – H46

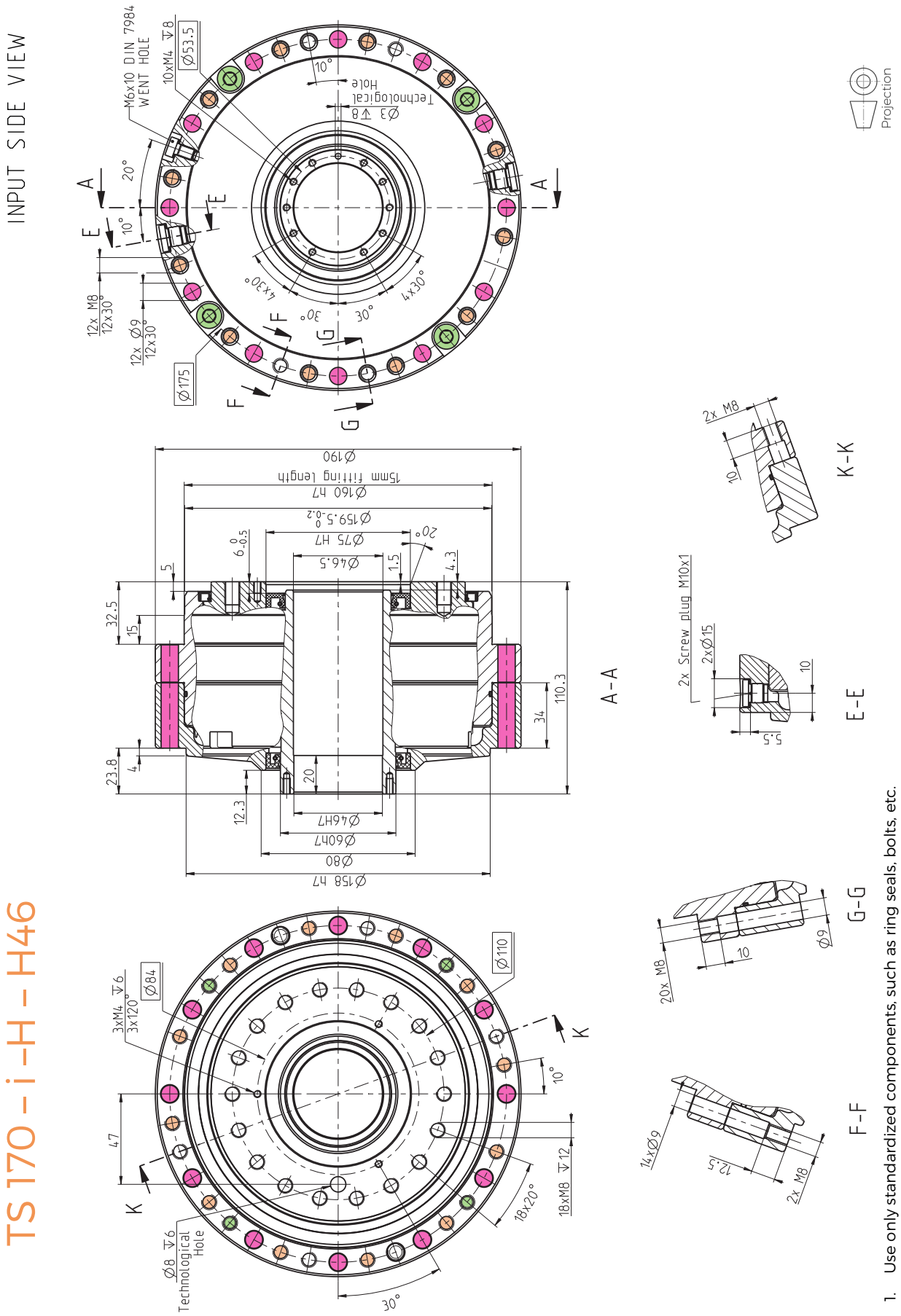

1. Use only standardized components, such as ring seals, bolts, etc.
2. Right to change without prior notice reserved.

SPINEA BY TIMKEN
Courtesy of Steven Engineering, Inc - (800) 258-9200 - sales@steveneng.com - www.stevenengineering.com

TS 200 – i – H– H56

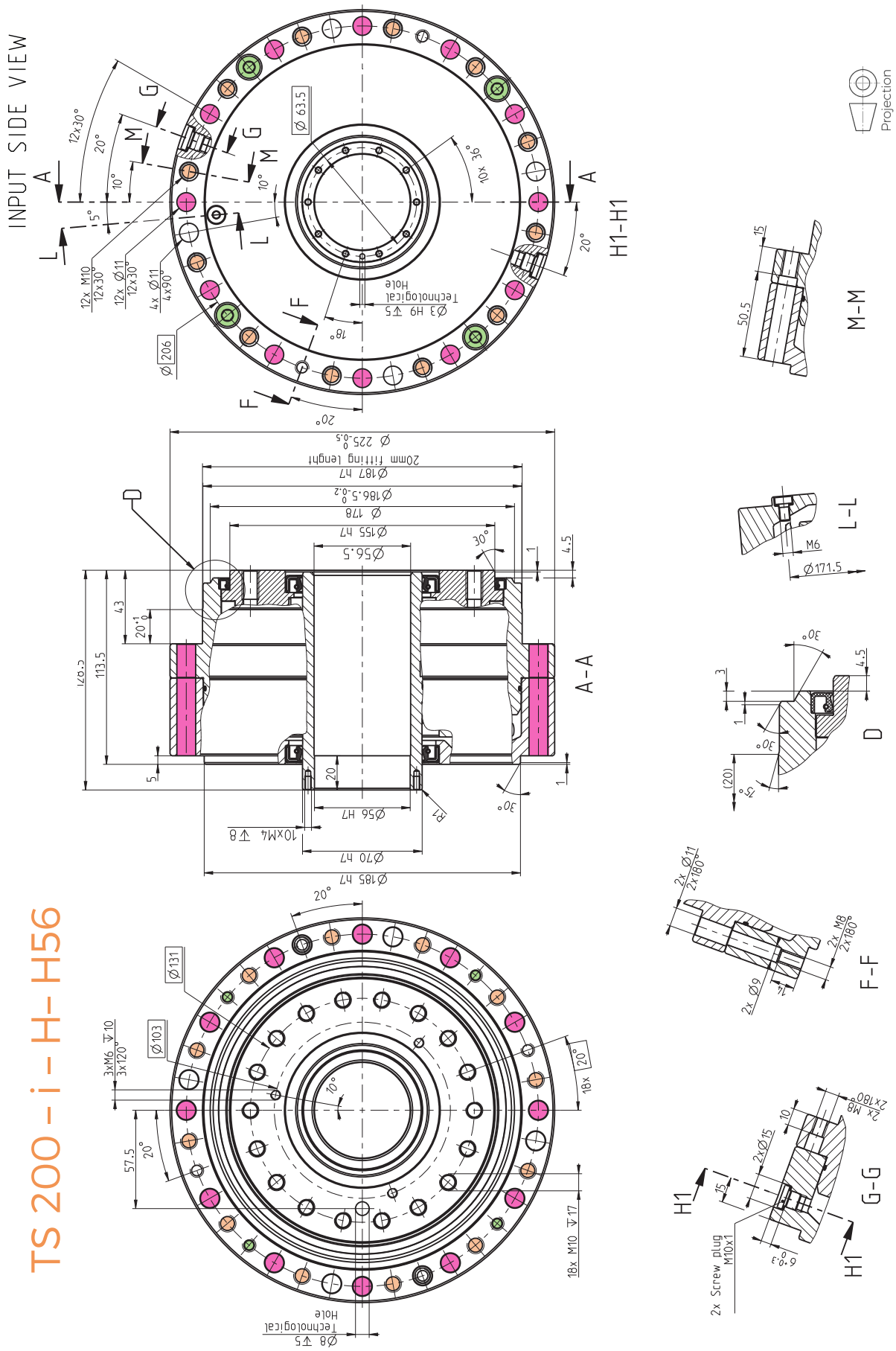

1. Use only standardized components, such as ring seals, bolts, etc.
2. Right to change without prior notice reserved.

SPINEA BY TIMKEN
Courtesy of Steven Engineering, Inc - (800) 258-9200 - sales@steveneng.com - www.stevenengineering.com

TS 220 – i – H – H 65

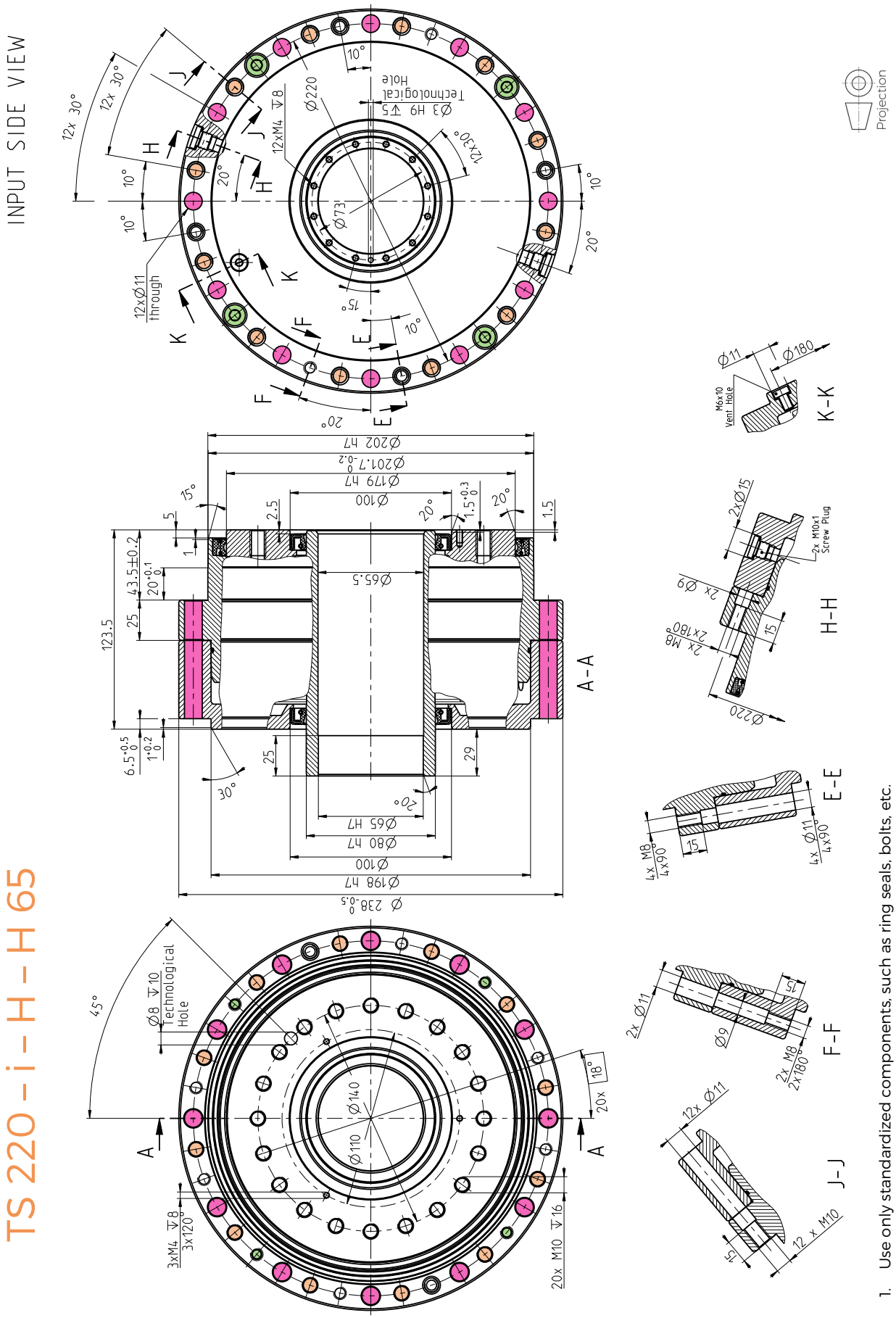

1. Use only standardized components, such as ring seals, bolts, etc.
2. Right to change without prior notice reserved.

SPINEA BY TIMKEN
Courtesy of Steven Engineering, Inc - (800) 258-9200 - sales@steveneng.com - www.stevenengineering.com

TwinSpin®

M SERIES

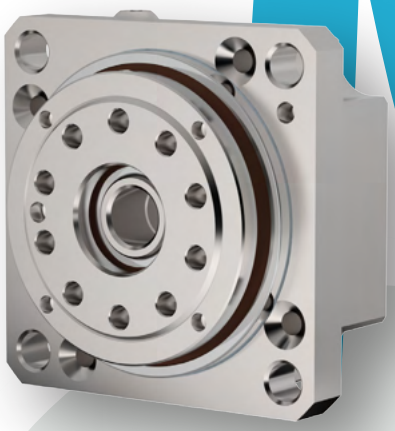

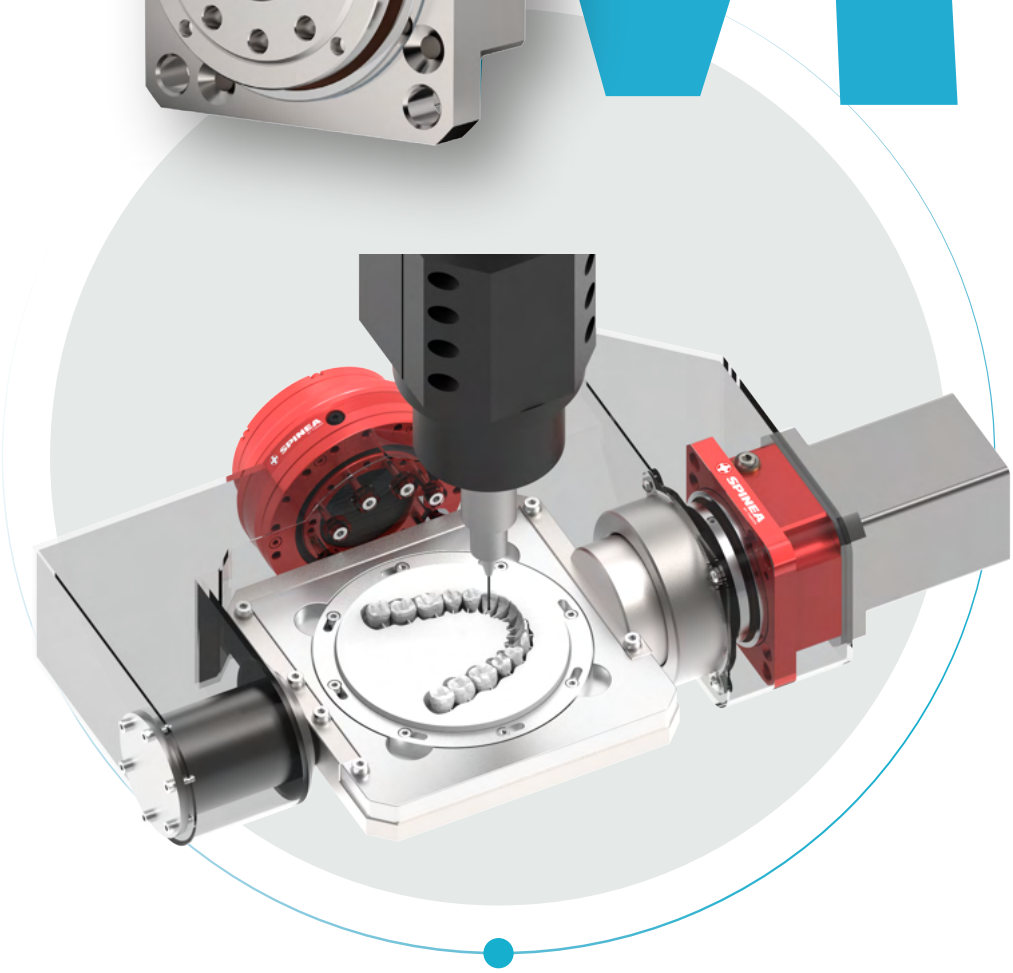

MINI SIZE

TwinSpin® **M** SERIES IS EXCELLENT
IN BOTH DENTAL MILLING MACHINES
AND MANY OTHERS

2.6 M SERIES

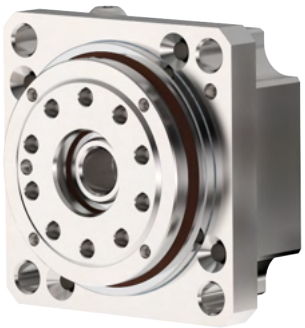

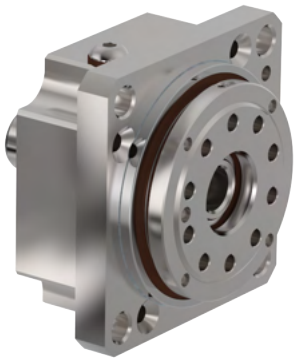

Advantages

- **small dimensions and compact design**
- **series sealed by 2RS ball bearings**
- **simple installation**
- **zero- backlash reduction gear**
- **very low mass**
- **very high power density**
- **output deep groove ball bearings with very low friction**
- **very low friction and high efficiency**
- **high performance of the reduction gear**
  - **high precision**
  - **high torsional stiffness**
  - **high linearity of torsional stiffness characteristics**

The **M series** represents TwinSpin® high precision reduction gears of mini sizes. The M series is filled with grease for lifetime. The sealing of the M series reduction gears is secured by sealed (2RS) ball bearings, which are used as output bearings of the reduction gear, and also as the housing of the input shaft of the reduction gear (slight leakage of lubricant is allowed). Upon customer's request, SPINEA® is able to supply a completely sealed reduction gear. This design of the reduction gears allows the load to be mounted directly on the output flange or the case without the need for additional bearings.

Tab. 2.6a: TwinSpin® M series mini reduction gear versions

Shape of the case	a) The mounting part of the case is located on the output side of the TwinSpin® high precision reduction gear. b) The mounting part of the case is located on the input side of the TwinSpin® high precision reduction gear. 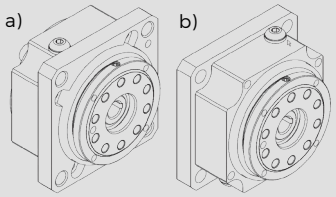
Iput shaft connection	a) Direct connection of shafts without couplings. The motor shaft is aligned with the hole with a keyway. b) Indirect connection of shafts with rigid or flexible couplings c) Shafts are aligned according to the customer's requirements.

The M series high precision reduction gears are manufactured in several modifications according to specification of the shaft and the case; see Tab. 2.6a.

SPINEA BY TIMKEN
Courtesy of Steven Engineering, Inc - (800) 258-9200 - sales@steveneng.com - www.stevenengineering.com

Tab. 2.6b: M series ordering specifications

TS - 50 - 63 - M - P6

Name	Size	Ratio	Series version	Shaft version		
				P	H	S
TS	50	47 , 63	M	6	8	according to special request

Note: An example of ordering code of a modified TwinSpin® reduction gear with motor flange:
TS 050 – 63 – M - P6– M235 – P231. The marks M235 and P231 for specific modification are defined by the manufacturer.

Shaft version

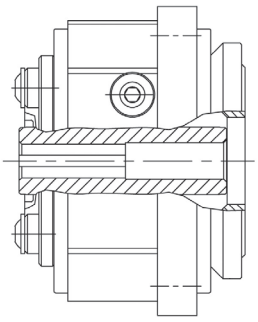

a) P- Shaft with keyway

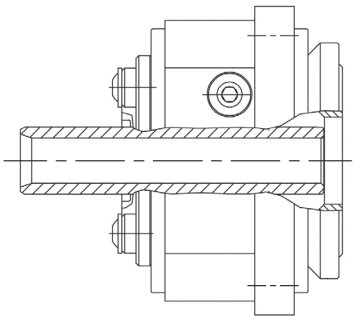

b) H - Hollow shaft

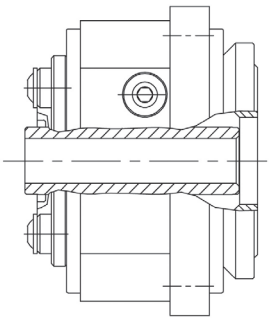

c) S- Special shaft

Courtesy of Steven Engineering, Inc - (800) 258-9200 - sales@steveneng.com - www.stevenengineering.com

Tab. 2.6c: M series rating table

Size	Reduction ratio	Rated output torque	Max. acceleration / deceleration torque	Permissible output torque at emergency stop	Rated input speed	Rated output speed	Max. continuous input speed	Max. allowable input speed 1) 6)	Tilting stiffness 1)	Torsional stiffness 1)
	i	T_R [Nm]	T_{acc} [Nm]	T_{em} [Nm]	n_R [rpm]	n_{Rout} [rpm]	n_{cmax} [rpm]	n_{max} [rpm]	M_t [Nm/arcmin]	k_t [Nm/arcmin]
TS 050	47 63	18	36	90	2 000	32	3 000	5 000	4	2.5

RIGHT TO CHANGE WITHOUT PRIOR NOTICE RESERVED

1) Mean statistical value.
2) Load at output speed $n_{Rout} = n_R / i$. For TS 050 M at 32 [rpm].
3) Moment $M_{c\,max}$ at F_a=0. If $F_a \neq 0$ see par. 3.5.1.
4) Radial force $F_{r\,max}$ for F_a=0. If $F_a \neq 0$ see par. 3.5.1.
5) Axial force $F_{a\,max}$ for F_r=0, M_c=0. If $M_c \neq 0$, see par. 3.5.1.
6) At 50% n_{cmax} (max input speed in cycle).
7) Applies to standard version of the high precision reduction gear with shaft connected by keyway.
8) a_2 - the distance of the radial force centre from the output flange front side [m].
9) Valid for unsealed version of the high precision reduction gear.

SPINEA BY TIMKEN

Courtesy of Steven Engineering, Inc - (800) 258-9200 - sales@steveneng.com - www.stevenengineering.com

Tab. 2.6c: M series rating table - continued

Average no-load starting torque 1) 9)	Average back driving torque 1)	Max. lost motion	Hysteresis	Max. peak moment 2) 3)	Max radial force 2) 4) 8)	Max. axial force 2) 5)	Input inertia 7)	Weight 7)
[cNm]	[Nm]	LM [arcmin]	H [arcmin]	$M_{c\,max}$ [Nm]	F_{rR} [kN]	$F_{a\,max}$ [kN]	I [10^{-4} kgm²]	m [kg]
7 5	3 2	<1.5	<1.5	44	a_2=0 1.44 a_2>0 0.044/(a_2+0.0305)	1.9	0.007	0.47

Note:
Load values in Tab. 2.6c are valid for the nominal life of L_{10} = 6 000 [Hrs].

Courtesy of Steven Engineering, Inc - (800) 258-9200 - sales@steveneng.com - www.stevenengineering.com

TS 050 – i – M – P6

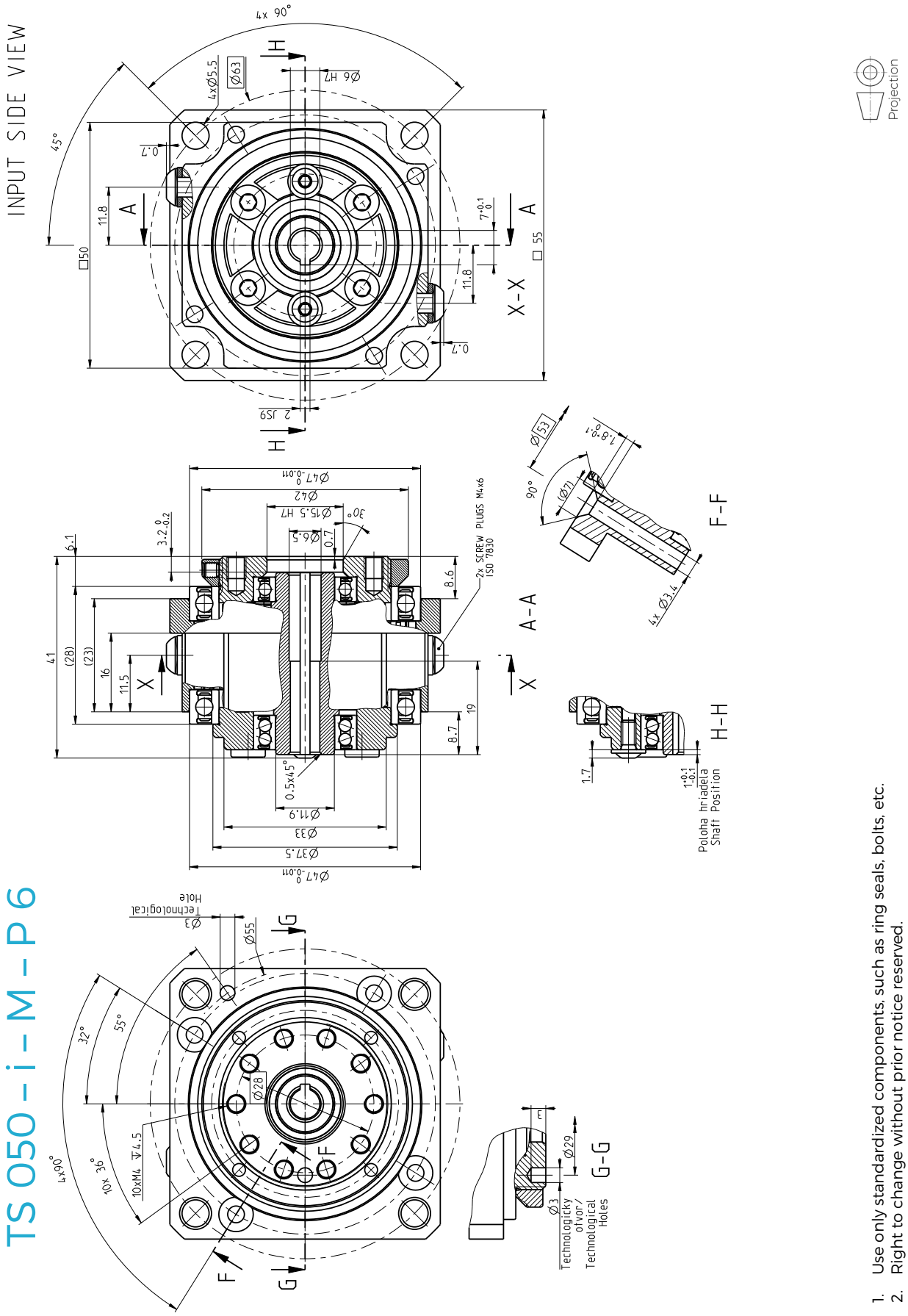

1. Use only standardized components, such as ring seals, bolts, etc.
2. Right to change without prior notice reserved.
3. Unsealed space, see the installation instructions in the TS Catalogue.

SPINEA BY TIMKEN
Courtesy of Steven Engineering, Inc - (800) 258-9200 - sales@steveneng.com - www.stevenengineering.com

TS 050 – i – M – H8 – M826

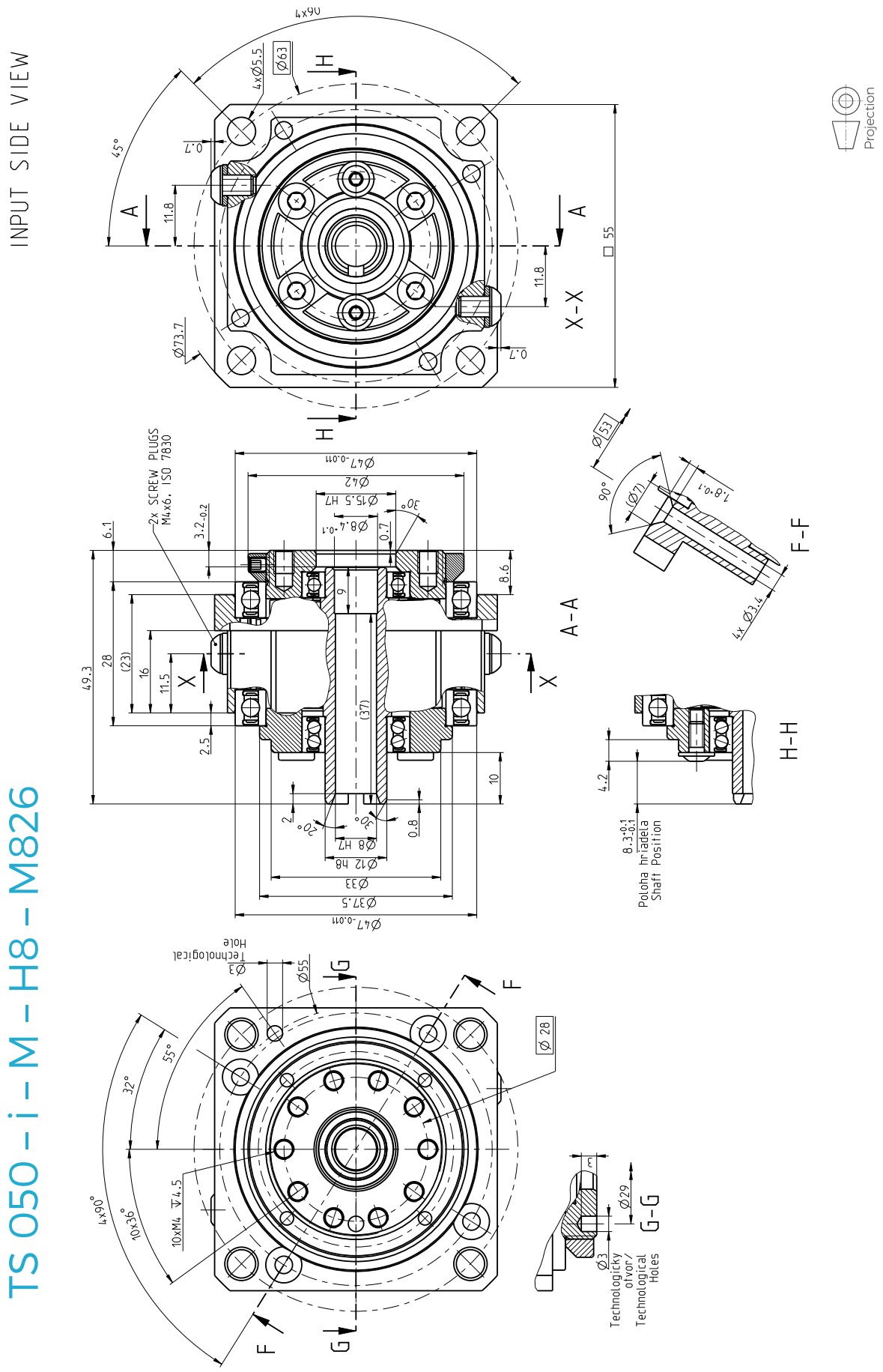

1. Use only standardized components, such as ring seals, bolts, etc.
2. Right to change without prior notice reserved.
3. Unsealed space, see the installation instructions in the TS Catalogue.

SPINEA BY TIMKEN
Courtesy of Steven Engineering, Inc - (800) 258-9200 - sales@steveneng.com - www.stevenengineering.com

TS 050 – i – F8 – M817

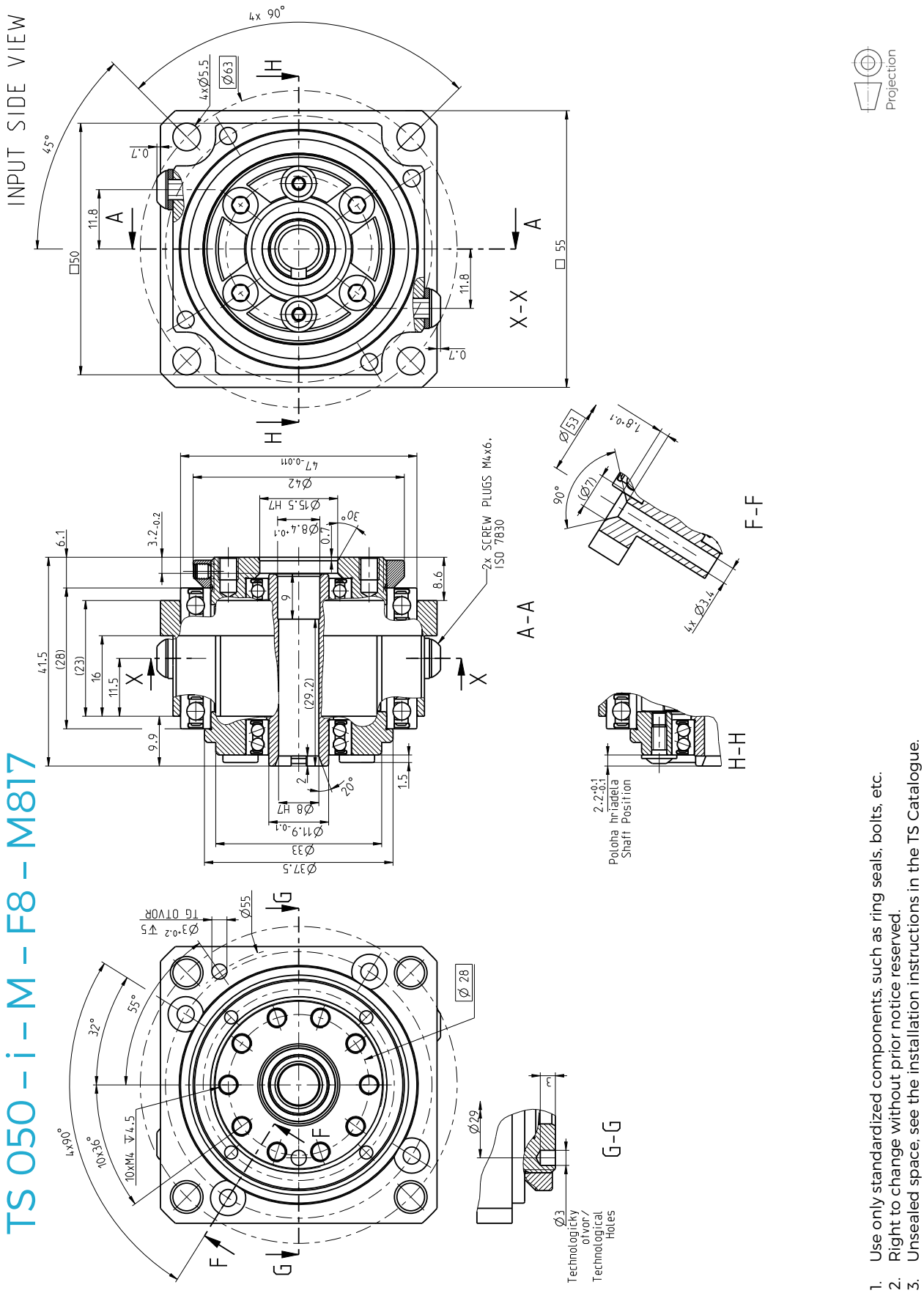

1. Use only standardized components, such as ring seals, bolts, etc.
2. Right to change without prior notice reserved.
3. Unsealed space, see the installation instructions in the TS Catalogue.

SPINEA BY TIMKEN
Courtesy of Steven Engineering, Inc - (800) 258-9200 - sales@steveneng.com - www.stevenengineering.com

Courtesy of Steven Engineering, Inc - (800) 258-9200 - sales@steveneng.com - www.stevenengineering.com

3. Performance characteristics

3.1 G, GH, T, E, H, M series service life calculation

Nominal service life of the TwinSpin® reduction gear is determined by service life of the input shaft bearings. This nominal service life is limited by the bearing material fatigue. It does not take into account other factors that may limit the practical service life, such as insufficient lubrication, contamination or overload. Nominal service life is only a statistical value.
It denotes the time in operation under rated conditions during which 10% of a large number of reduction gears is damaged due to material fatigue. For further explanations or special calculations for your specific application please contact the aales department or your local sales representative.

Service life of particular speed and load values can be calculated as follows:

$$L_h = \mathrm{k} \cdot \frac{n_R}{n_a} \cdot \left(\frac{T_R}{T_a}\right)^{\frac{10}{3}}$$

k – 6 000 hour service life [Hrs]
L_h – required service life [Hrs]
T_a – average output torque [Nm]
n_a – average input speed [rpm]
T_R – rated output torque [Nm]
n_R – rated input speed [rpm]

3.2 M series maximum continuous input speed ($n_{c\ max}$)

Maximum continuous input speed is a speed limit in the continuous operation mode S1. If higher speeds are required, please contact the sales department.

3.3 G, GH, T, E, H, M series maximum acceleration and braking torques

Due to inertial loads, torque applied during acceleration and braking is higher than the rated value. Maximum allowable torque value is provided in Tab. 2.1c, Tab. 2.2a, Tab. 2.3c, Tab. 2.4c, Tab. 2.5c, and Tab. 2.6c. It should be noted that its occurrence is incidental and rare, and it is in no way a part of regular duty cycle.

3.4 G, GH, T, E, H, M series maximum emergency stop torque (T_{em})

An emergency stop and the induced shock load may result in torque values higher than the nominal value. The maximum allowable torque value is provided in Tab. 2.1c, Tab. 2.2a, Tab. 2.3c, Tab. 2.4c, Tab. 2.5c, and Tab. 2.6c. It should be noted that its occurrence is accidental and rare, and it is not part of a regular duty cycle in any way.

3.5 Allowable radial-axial load and moment load on the output flange of the G, GH, T, E, H series

Radial and axial loads act independently thanks to integrated radial-axial output bearings. Allowed radial load (F_r) is provided in the rating tables. The moment (Fig. 3.6a and Fig. 3.6b) is expressed as follows:

$$M_c = \mathrm{F}_r \cdot a + F_a \cdot b$$

a – radial force F_r arm [m]
b – axial force F_a arm [m]
M_c – moment [Nm]
F_r – radial load [N]
F_a – axial load [N]

Allowable load for the moment (M_c) and the axial force (F_a) is shown in Fig. 3.5. A point with coordinates (M_c , F_a) must lie in the area under the line of selected reduction gear. For example, in case of TS 170 T, E, at output speed of 15 rpm, L_{10} = 6 000 hrs and moment Mc = 1 500 Nm, maximum axial force may be 10,7 kN (see Fig. 3.5). Allowable radial and axial loads determine allowable dynamic load that can be applied on a reduction gear.
For more detailed calculations for specific conditions please contact the sales department or your local sales representative.

SPINEA BY TIMKEN
Courtesy of Steven Engineering, Inc - (800) 258-9200 - sales@steveneng.com - www.stevenengineering.com

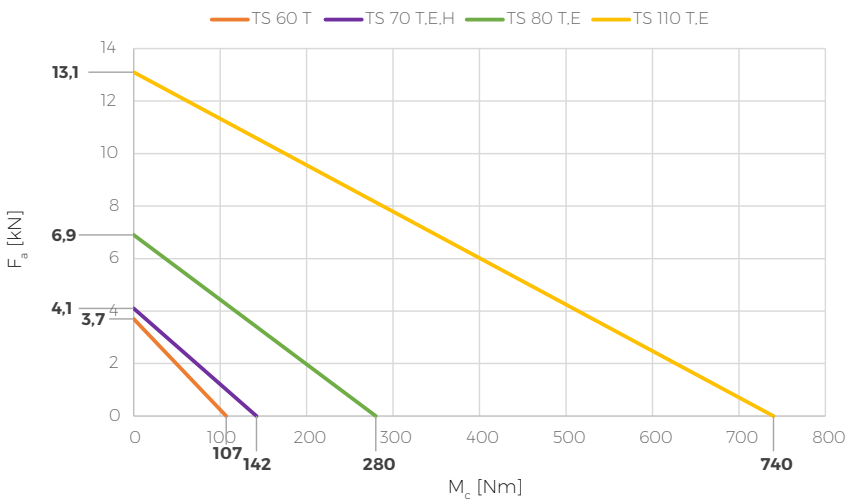

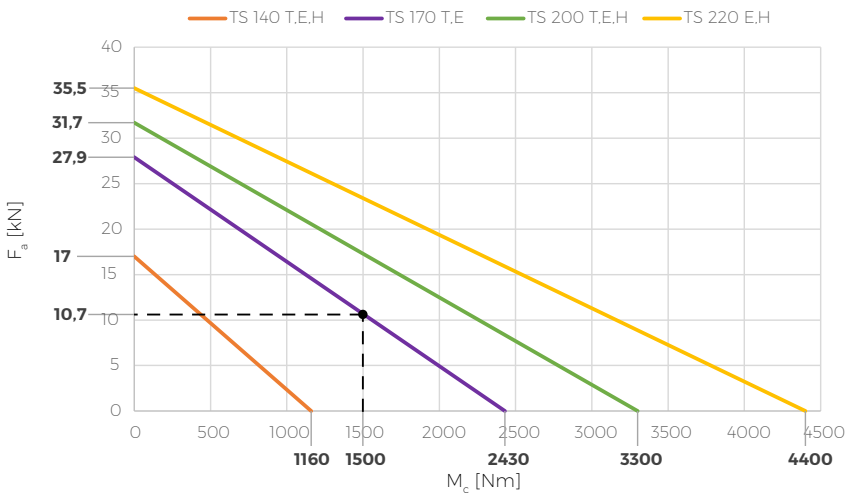

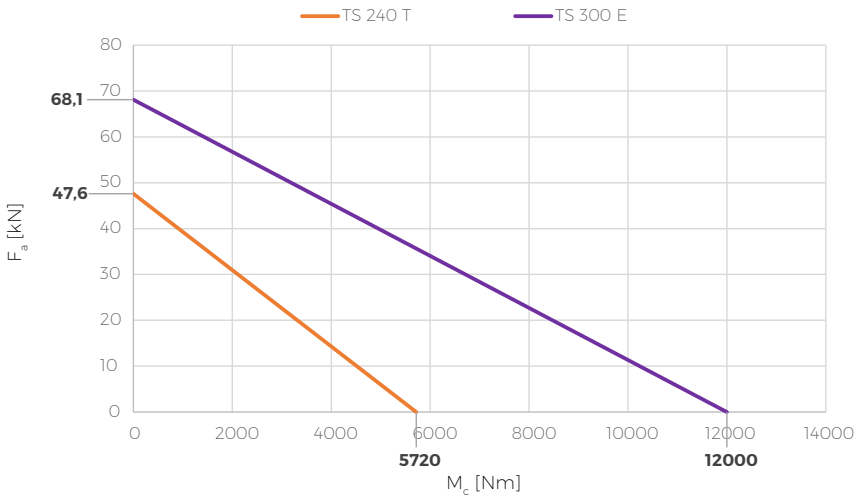

Fig. 3.5: Relation between the moment and axial force

SPINEA BY TIMKEN
Courtesy of Steven Engineering, Inc - (800) 258-9200 - sales@steveneng.com - www.stevenengineering.com

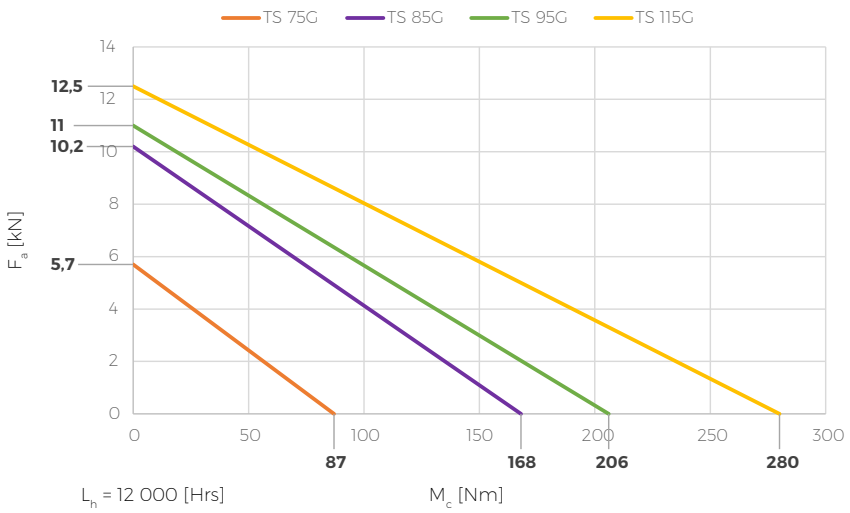

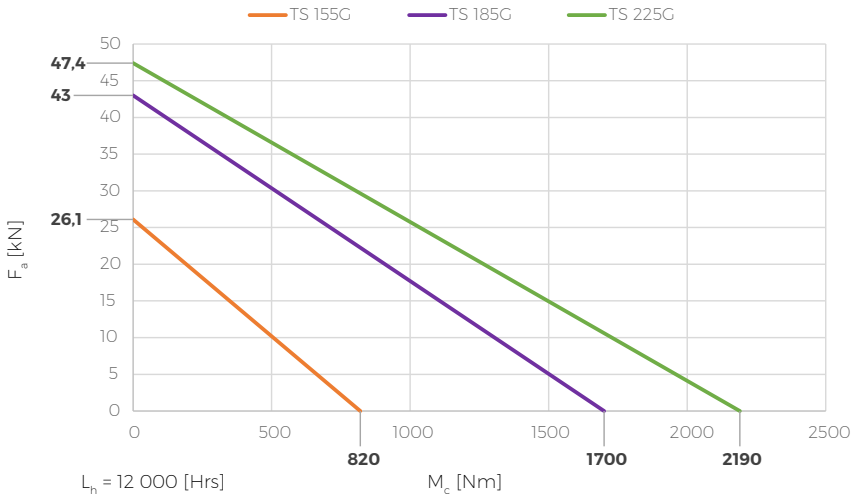

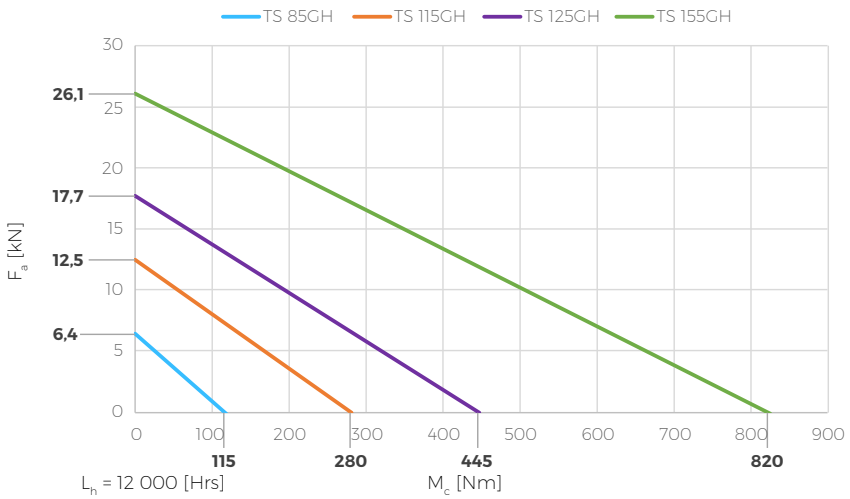

SPINEA BY TIMKEN
Courtesy of Steven Engineering, Inc - (800) 258-9200 - sales@steveneng.com - www.stevenengineering.com

3.5.1 Allowable radial-axial load and moment on the output flange of the **M** series

The output flange of the TwinSpin® M series reduction gear is able to transmit external loads from the radial force F_r , axial force F_a and moment M_c .

M_c – moment [Nm]
F_r – radial load [N]
F_a – axial load [N]

b – arm of force F_a [m]
a_1 – perpendicular distance between the centre of the output bearings and the face of the output flange [m]
a_2 – perpendicular distance between the vector of force F_r and the face of the output flange [m]
a_3 – perpendicular distance between the centre of the output bearing A and the face of the output flange [m]
$a = a_1+a_2$ – arm of force F_r in relation to the centre of the output bearings [m]
A, B – identification of the bearings
A – bearing of the reduction gear output side
B – bearing of the reduction gear input side

R_{Ax}, R_{Ay}, R_{Bx}, R_{By} – reaction identificiation on x-axis (axial direction) and y-axis (radial direction) in bearings A,B
L_1 – distance between the centres of the output bearings [m]
$L_2 = a_2+a_3$ – perpendicular distance between the vector of force F_r and the centre of the output bearing A [m]

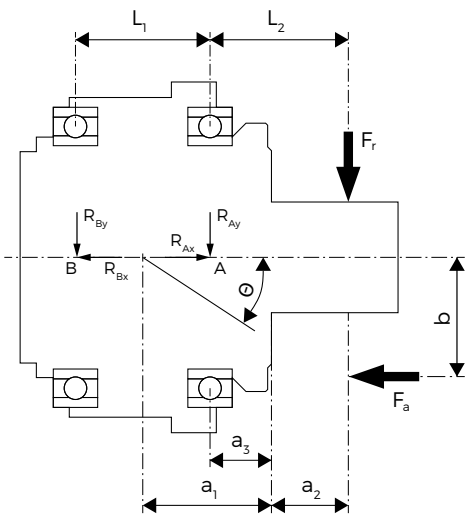

Fig. 3.5.1: Loading of the M series reduction gear and the angle of tilt

The moment in the place of bearing A according to Fig. 3.5.1 is expressed as follows:

$$M_c = F_r \cdot (a_2 + a_3) + F_a \cdot b = F_r \cdot L_2 + F_a \cdot b$$

When checking external loads of the TwinSpin® M series reduction gear, proceed as follows:

a) Allowable axial load
$F_a \leq F_{a\,max}$
according to the Tab. 3.5.4

b) Allowable moment
$M_c \leq M_{c\,max}$
according to the Tab. 3.5.5

c) Allowable radial load
$F_r \leq F_{r\,max}$
according to the Tab. 3.5.6

d) Equivalent load
$P_{rA} \leq P_{r\,max}$
according to the Tab. 3.5.3

Tab. 3.5.1: Distances a1, a3 and L1 from Fig. 3.5.1

TS series M	TS 050
Distance a_1 [m]	0,02
Distance a_3 [m]	0,0095
Distance L_1 [m]	0,021

SPINEA BY TIMKEN
Courtesy of Steven Engineering, Inc - (800) 258-9200 - sales@steveneng.com - www.stevenengineering.com

3.5.2 M series output bearings load capacity

The standard version of the TwinSpin® M series reduction gear has two sealed (2RS) deep groove ball bearings as output bearings. Tab. 3.5.2a describes the basic dynamic and static load capacity of the two bearings and Table 3.5.2b is used for calculation of equivalent loading of one output deep groove ball bearing of the reduction gear.

Tab. 3.5.2a: Capacity of M series deep groove ball bearings

TwinSpin® M series reduction gear	TS 050
Basic dynamic load capacity C_r [kN]	4.75
Basic static load capacity C_0 [kN]	3.85

Tab. 3.5.2b: Calculation of equivalent load of one M series deep groove ball bearing

		R_x/C_0	e	R_x/R_y <= e		R_x/R_y > e	
				X	Y	X	Y
Equivalent Radial Load	Dynamic equivalent radial load $P_r = X.\ R_y + Y.\ R_x$ Values X and Y are in the table on the right Static equivalent radial load = 0.6 R_y + 0.5 R_x if value P_{Or} < Ry. $P_{Or} = R_y$	0.014 0.028 0.056 0.084 0.11 0.17 0.28 0.42 0.56	0.19 0.22 0.26 0.28 0.30 0.34 0.38 0.42 0.44	1	0	0.56	2.30 1.99 1.71 1.55 1.45 1.31 1.15 1.04 1.00

Where R_x, R_y are reactions in bearings A, B, i.e. identified as R_{Ax}, R_{Ay}, R_{Bx}, R_{By} according to Fig. 3.5.1.

3.5.3 M series output bearings allowable load

The tables of nominal values Tab. 3.5.4, Tab. 3.5.5, and Tab. 3.5.6, show the allowable radial force $F_{r\,max}$, allowable axial load $F_{a\,max}$ and allowable moment $M_{c\,max}$ applied to the output flange of the TwinSpin® M series reduction gear according to Fig. 3.5.1. This is the load at which the gear achieves nominal service life of its output bearing L_{10} = 6 000 Hrs at nominal output speed $n_{r\,out}$. Equivalent radial load can be determined from the formula:

$$L_{10} = \frac{10^6}{60 \cdot n} \cdot \left(\frac{C_r}{P_r}\right)^3 \qquad P_r = \frac{C_r}{(L_{10} \cdot 60 \cdot n \cdot 10^{-6})^{\frac{1}{3}}}$$

L_{10} – service life [hour]
n – operational speed [rpm]
C_r – basic dynamic load capacity of the bearing [N]
P_r – equivalent radial load [N]

Tab. 3.5.3: Maximum equivalent radial load of the M series output bearing

M series high precision reduction gear (L_{10} = k = 6 000 [Hrs], n = $n_{R\,out}$ = 32 [rpm])	TS 050
Ratio i	63
Equivalent max. radial load of the output bearing $P_{r\,max}$ [N]	2 100

3.5.4 M series allowable axial load $F_{a\,max}$

Tab. 3.5.4 shows maximum allowable axial load $F_{a\,max}$, where the force arm is b = 0 (Fig. 3.5.1) and F_r = 0 and M_c = 0.

Tab. 3.5.4: Allowable axial load $F_{a\,max}$ on the M series output bearing

M series high precision reduction gear (L_{10} = k = 6 000 [Hrs], n = $n_{R\,out}$ = 32 [rpm])	TS 050
Ratio i	63
Allowable axial load $F_{a\,max}$ [N] (F_r = 0, M_c = 0, b = 0)	1 900

SPINEA BY TIMKEN
Courtesy of Steven Engineering, Inc - (800) 258-9200 - sales@steveneng.com - www.stevenengineering.com

3.5.5 M series allowable moment $M_{c\,max}$

When only external moment M_c is applied to the TwinSpin® M series reduction gear output flange, the following applies to the moment $M_{c\,max}$ maximum value in Tab. 3.5.5:

$$M_{c\,max} = P_{r\,max} \cdot L_1$$

Tab. 3.5.5: Allowable moment on the output flange of the M series high precision reduction gear	
M series high precision reduction gear (L_{10} = k = 6 000 [Hrs], n = $n_{R\,out}$ = 32 [rpm])	TS 050
Allowable moment $M_{c\,max}$ [Nm] (F_a = 0)	44

3.5.6 M series allowable radial load $F_{r\,max}$

Allowable radial load values $F_{r\,max}$ when F_a = 0 (Tab. 3.5.6) are calculated from the formula:

$$F_{r\,max} = \frac{M_{c\,max}}{(a_2 + a_3 + L_1)}$$

Tab. 3.5.6: Allowable radial load on the M series output flange	
M series high precision reduction gear (L_{10} = k = 6 000 [Hrs], n = $n_{R\,out}$ = 32 [rpm])	TS 050
Allowable radial load $F_{r\,max}$ [N]	44/(a_2 + 0.0305)
Allowable radial load for a_2 = 0 , $F_{r\,max}$ [N]	1 440 N

Where a_2 is perpendicular distance between the vector of force F_r and the face of the output flange [m] Fig. 3.5.1

3.5.7 M series output flange allowable load when applying both F_r radial force and F_a axial force

When both radial force F_r and axial force F_a are applied to the output flange, then, according to Tab. 3.5.2b, equivalent load is calculated as follows:

$$P_{rA} = X \cdot \left(\frac{F_a \cdot b + F_r \cdot (a_2 + a_3)}{L_1} + F_r \right) + Y \cdot F_a$$

$$P_{rA} = X \cdot \left(\frac{M_c}{L_1} + F_r \right) + Y \cdot F_a$$

Where coefficients X and Y are calculated according to Tab. 3.5.2b as follows:

$$\frac{R_{Ax}}{C_{0r}} = \frac{F_a}{C_{0r}} \rightarrow X, Y$$

$$\frac{R_{Ax}}{R_{Ay}} = \frac{F_a}{\frac{F_a \cdot b + F_r \cdot (a_2 + a_3)}{L_1} + F_r} \rightarrow X, Y$$

$$\frac{R_{Ax}}{R_{Ay}} = \frac{F_a}{\frac{M_c}{L_1} + F_r} \rightarrow X, Y$$

Courtesy of Steven Engineering, Inc - (800) 258-9200 - sales@steveneng.com - www.stevenengineering.com

3.6 G, GH, T, E, H, M series output flange tilting stiffness and deflection angle

The TwinSpin® reduction gears are able to withstand external forces and moment loads by means of integrated output bearings. When the output flange is loaded, the flange deflection angle is proportional to the applied moment. The tilting stiffness (M_t) is a moment at which the output flange deflects by angle Θ = 1'. The M_t values are specified in the rating table in Chapter 2. The tilting angle of the output flange (Fig. 3.6a, Fig. 3.6b and Fig. 3.5.1) can be determined as follows:

$$\Theta = \frac{F_r \cdot a + F_a \cdot b}{M_t}$$

Θ – output flange tilting angle [arcmin]
M_t – tilting stiffness [Nm/arcmin]
F_r – radial load [N]
F_a – axial load [N]
a – arm of force F_r [m]
$a = a_1 + a_2$
$a_1 = L / 2$
b – arm of force F_a [m]

Values a_1 for G, GH series								
Size	TS 075	TS 085	TS 095	TS 115	TS 125	TS 155	TS 185	TS 225
Values a_1 [mm]	11	13.5	13	13	15.5	18	23	26

If the reducer is fixed on both sides then the radial load is $2xF_r$.

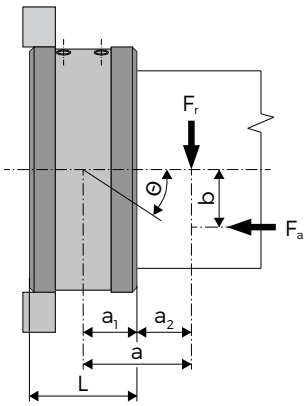

Fig. 3.6a: Load and moment on the T, E, H, M series output flange

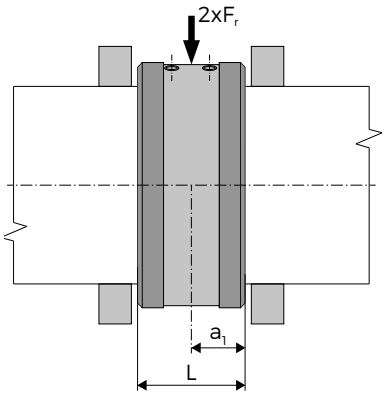

Fig. 3.6b: Load and moment on the T, E, H series output flange

3.7 G, GH, T, E, H, M series lost motion, hysteresis and torsional stiffness

If the input shaft and the case are fixed and torque is applied to the output flange, then the load diagram has the shape of a hysteresis curve (Fig. 3.7a).
The transmission mechanism of TwinSpin® reduction gears is manufactured and assembled in such way that there is zero back-lash in the gear. Hysteresis H expresses the amount of friction in the reduction gear. Hysteresis H expresses the friction intensity in the reduction gear. Hysteresis loss occurs as a result of the reduction gear internal friction. The hysteresis of the torsion turn H [arcmin] is measured as an angular difference determined by the intersections of the hysteresis curve with the turn axis at point T_R = 0 [Nm].

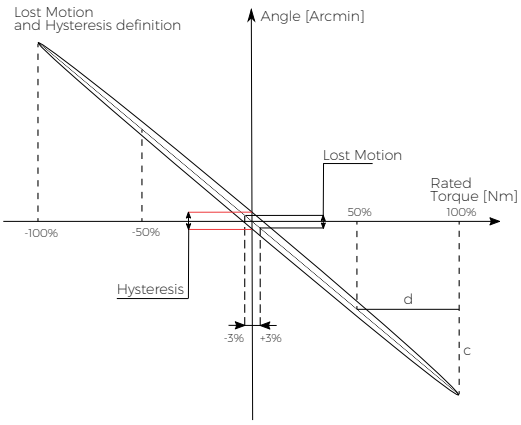

Fig. 3.7a: Hysteresis curve and the definition of stiffness

SPINEA BY TIMKEN
Courtesy of Steven Engineering, Inc - (800) 258-9200 - sales@steveneng.com - www.stevenengineering.com

Torsional stiffness (k_t) is defined as follows:

$$k_t = \frac{d}{c}$$

Torsional stiffness and lost motion values are provided in the rating table. The torsional stiffness is a statistical value for particular reduction ratio. High precision reduction gears with hysteresis and lost motion of ≤0.6 arcmin can be supplied upon request. The hysteresis characteristics of TS 140-139-TB with lost motion under 0.5 arcmin is illustrated in Fig. 3.7b.

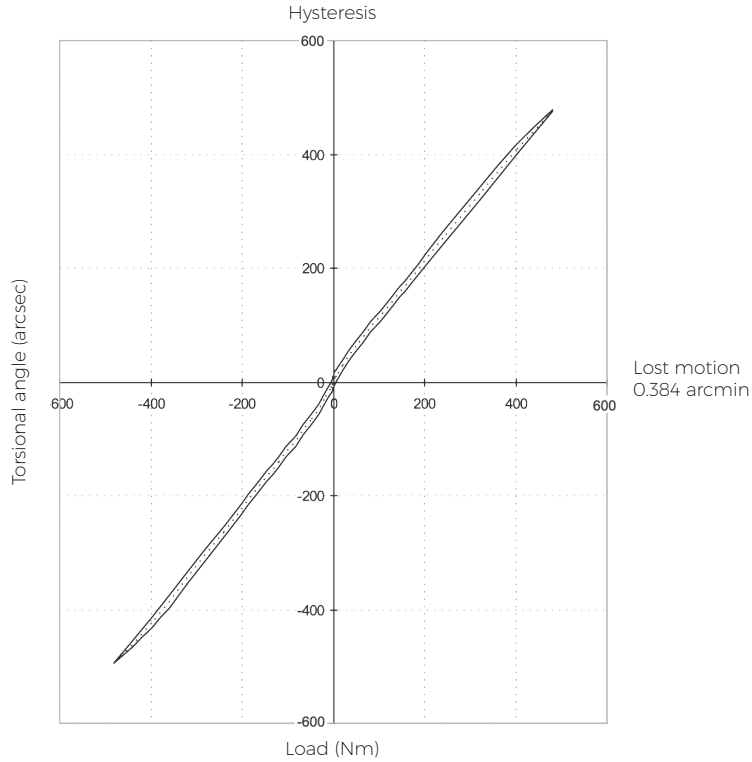

Fig. 3.7b: Hysteresis curve of TS 140-139-TB

3.8 G, GH, T, E, H, M series torsional vibrations

Torsional vibration is indicated in the peripheral direction of an inertia load driven by the reduction gear. Low vibration is extremely important for applications where high precision contouring is required. For example, a tool centre point of a robot end point has to follow the desired trajectory as precisely as possible. If robot joints vibrate, the trajectory tracking is poor. Added axes of a machine tool is another application example where very smooth running of the high precision reduction gear is required.

An accelerometer installed on the defined lever arm records the vibration of an inertia load. Reference measurement of peripheral acceleration and position deviation is shown on Fig. 3.8. TwinSpin® runs extremely smoothly. For an input speed higher than 500 rpm the peripheral deviation is about 10 µm. The value of external diameter amplitude LFD/LFA is stabilized when the input speed reaches and exceeds 900 rpm. Hence the maximum input speed 900 rpm was chosen for the evaluation of torsional vibration.

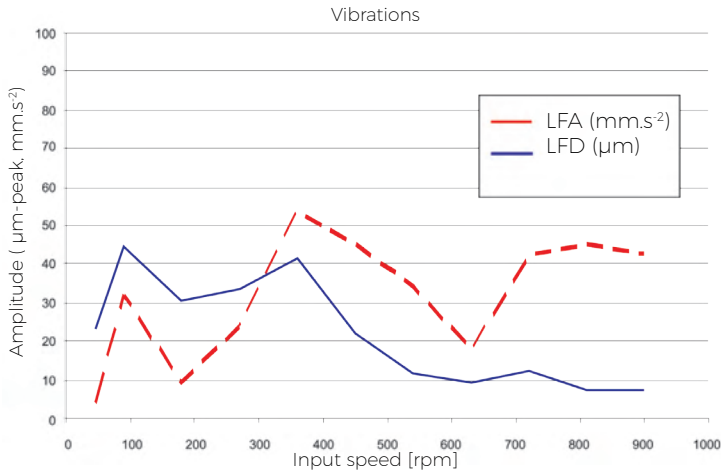

Fig. 3.8: Vibrations of TS 170-105-TC

Courtesy of Steven Engineering, Inc - (800) 258-9200 - sales@steveneng.com - www.stevenengineering.com

3.9 G, GH, T, E, H, M series angular transmission accuracy

Angular transmission error is the difference between theoretical output angle of rotation and actual angle of rotation. Angular transmission error of the TwinSpin® high precision reduction gear is typically 1 arcmin or less. Fig. 3.9 shows an example of angular transmission error measured on a specific TwinSpin® reduction gear TS 140-139-TB. The influence of the load on the angular transmission accuracy is relatively low.

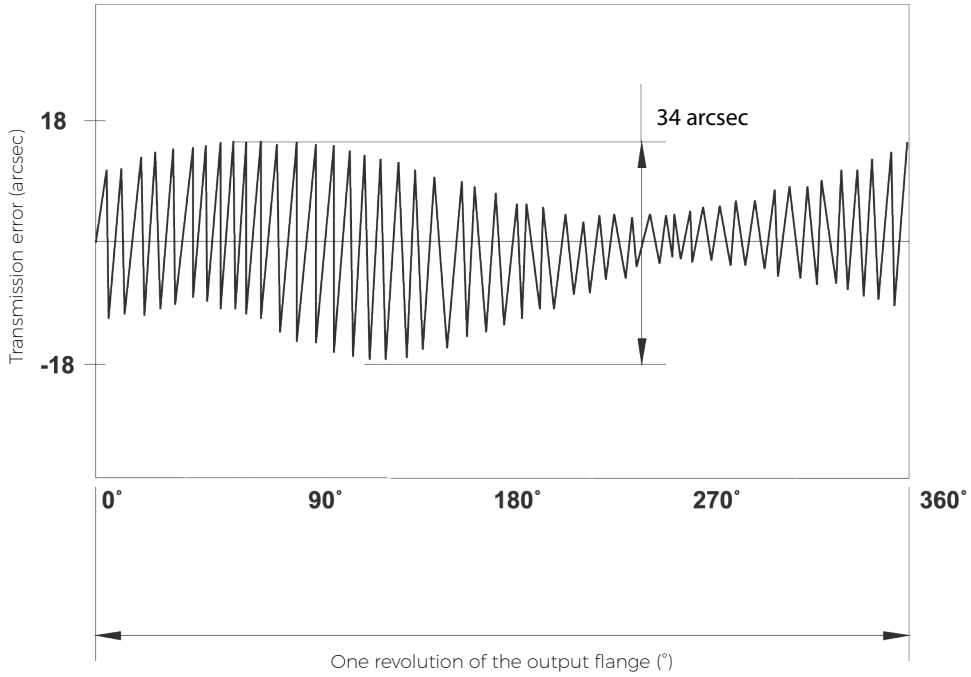

Fig. 3.9: Angular transmission error measurement

Measuring conditions
Model: TS 140-139-TB
Load conditions: no load

3.10 G, GH, T, E, H, M series no-load starting torque

No-load starting torque is a quasi-static torque required to start the input shaft rotation, if no load is applied to the output flange. The rating tables provide values for the starting torque, statistically evaluated from current production tests. Features in the table are specified only for temperature of 20 ˚C. For the reduction gear temperature lower than 20˚C there will be higher no-load starting torque. For a specific application please consult with the manufacturer.

3.11 G, GH, T, E, H, M series back-driving torque

Back-driving torque is a torque applied to the output flange that is required to start rotation of the input shaft with no-load. Chapter 2 provides values for back-driving torque, statistically evaluated from the current production tests. Attributes in the table are specified only for a temperature of 20 ˚C. For a temperature of the reduction gear lower than 20˚C there will be a higher no load starting torque. For a specific application please consult with the manufacturer.

3.12 G, GH, T, E, H, M series maximum moment on the input shaft ($M_{c\ in}$)

Since the input shaft is supported on both sides by bearings, radial loads $F_{r\ in}$ may be applied. The moment on the input shaft resulting from radial load (Fig. 3.12a T, E, H series Fig. 3.12b M series) can be calculated as follows:

$M_{c\ in}$ – allowable moments [Nm]
$M_{c\ in} = F_{r\ in} \cdot a$ – valid for T, E, H series
$M_{c\ in} = F_{r\ in} \cdot a_{in} + F_{a\ in} \cdot b_{in}$ – valid for M series
a – load force arm [m]
$F_{r\ in}$ – radial load [N]

Allowable moments $M_{c\ in}$ on the input shaft are provided in Tab. 3.12 (a, b, c).

SPINEA BY TIMKEN
Courtesy of Steven Engineering, Inc - (800) 258-9200 - sales@steveneng.com - www.stevenengineering.com

T, E, H, M series maximum moment on the input shaft ($M_{c\ in}$)

Tab. 3.12.a: Allowable moment $M_{c\ in}$ on the input shaft at the conditions specified in the parameter tables of Chapter 2

Size	TS 050	TS 060	TS 070	TS 080	TS 110	TS 140	TS 170	TS 200	TS 220	TS 240	TS 300
$M_{c\ in}$ [Nm]	M series 3	T series 6	T, E, H series 11	T, E series 16	T, E series 35	T, E, H series 68	T, E, H series 126	T, E, H series 157	E, H series 210	T series 260	T series 378

G series maximum moment on the input shaft ($M_{c\ in}$)

Tab. 3.12.b: Allowable moment $M_{c\ in}$ on the input shaft at the conditions specified in the parameter tables of Chapter 2

Size	TS 075G	TS 085G	TS 095G	TS 115G	TS 135G	TS 155G	TS 185G	TS 225G
$M_{c\ in}$ [Nm]	19	20	30	39	68	40	54	135

GH series maximum moment on the input shaft ($M_{c\ in}$)

Tab. 3.12.c: Allowable moment $M_{c\ in}$ on the input shaft at the conditions specified in the parameter tables of Chapter 2

Size	TS 085GH	TS 115GH	TS 125GH	TS 155GH	TS 245GH	TS 285GH
$M_{c\ in}$ [Nm]	15	35	33	49	122	268

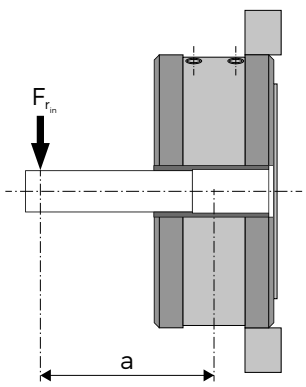

Fig. 3.12a: Radial load of the T, E, H series input shaft

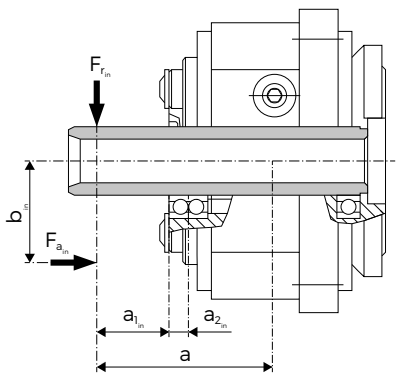

Fig. 3.12b: Radial load of the input shaft M series

Courtesy of Steven Engineering, Inc - (800) 258-9200 - sales@steveneng.com - www.stevenengineering.com

3.13 G series efficiency chart

The efficiency of the TwinSpin® reduction gears depends on the input speed, output load, viscosity of lubricant, operating temperature and Lost Motion.

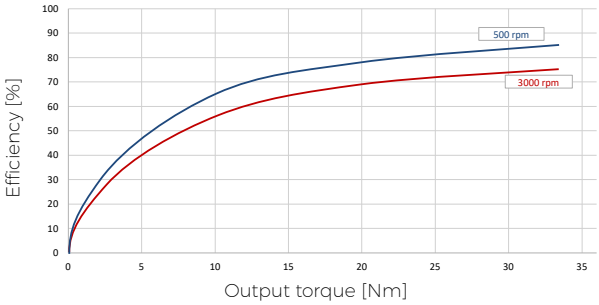

TS 075G, ratio 63 at 25°C
H = 0.39 arcmin
LM = 0.86 arcmin

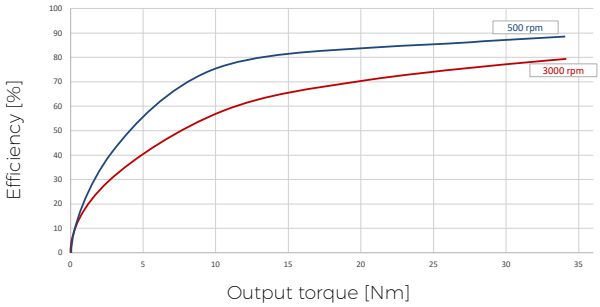

TS 075G, ratio 63 at 40°C
H = 0.39 arcmin
LM = 0.86 arcmin

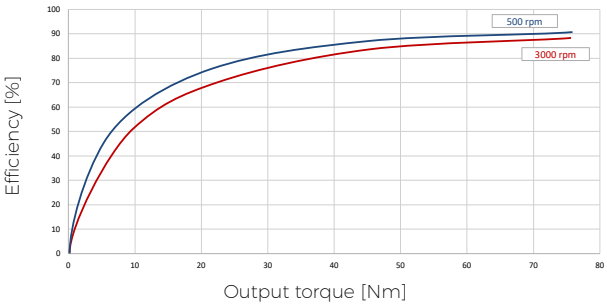

TS 085G, ratio 33 at 25°C
H = 0.59 arcmin
LM = 0.8 arcmin

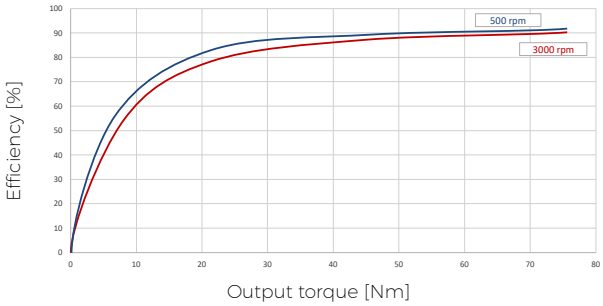

TS 085G, ratio 33 at 40°C
H = 0.59 arcmin
LM = 0.8 arcmin

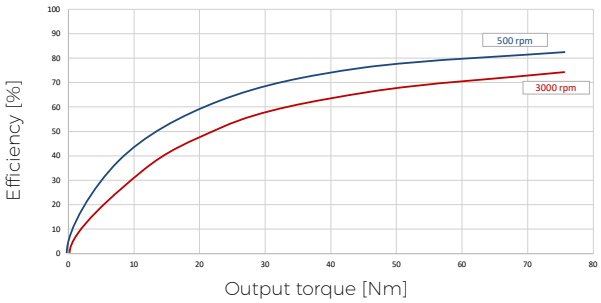

TS 085G, ratio 63 at 25°C
H = 1.01 arcmin
LM = 0.78 arcmin

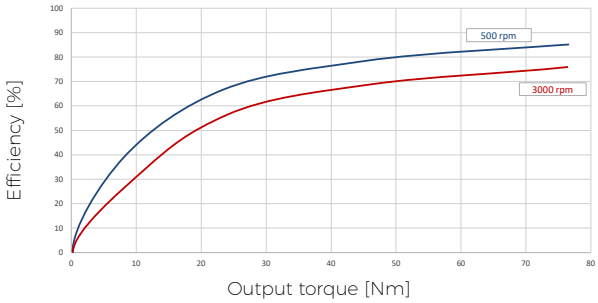

TS 085G, ratio 63 at 40°C
H = 1.01 arcmin
LM = 0.78 arcmin

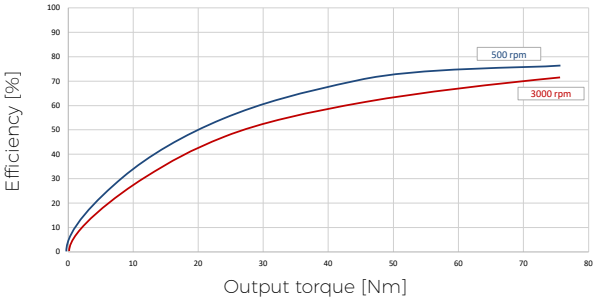

TS 085G, ratio 79 at 25°C
H = 0.72 arcmin
LM = 0.48 arcmin

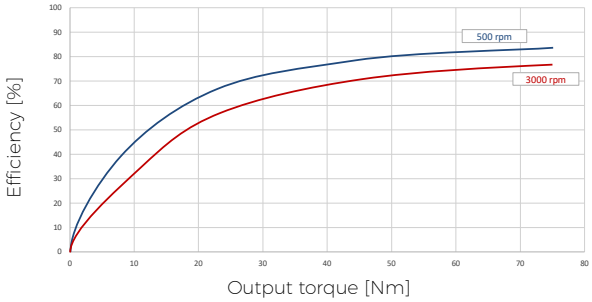

TS 085G, ratio 79 at 40°C
H = 0.72 arcmin
LM = 0.48 arcmin

Fig. 3.13: Efficiency charts

SPINEA BY TIMKEN
Courtesy of Steven Engineering, Inc - (800) 258-9200 - sales@steveneng.com - www.stevenengineering.com

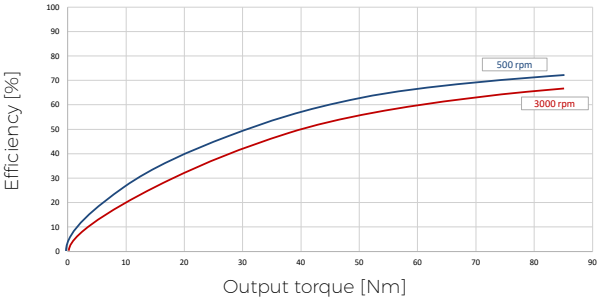

TS 095G, ratio 95 at 25°C
H = 0.69 arcmin
LM = 0.35 arcmin

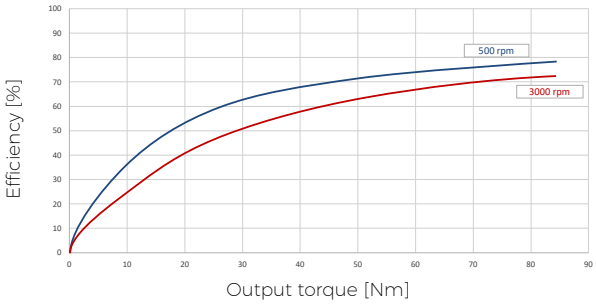

TS 095G, ratio 95 at 40°C
H = 0.69 arcmin
LM = 0.35 arcmin

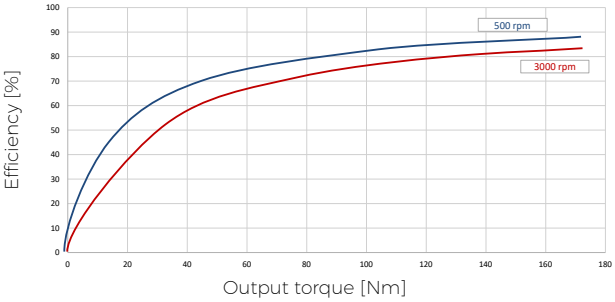

TS 115G, ratio 43 at 25°C
H = 0.84 arcmin
LM = 0.36 arcmin

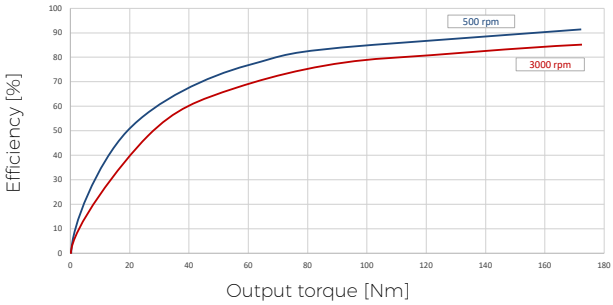

TS 115G, ratio 43 at 40°C
H = 0.84 arcmin
LM = 0.36 arcmin

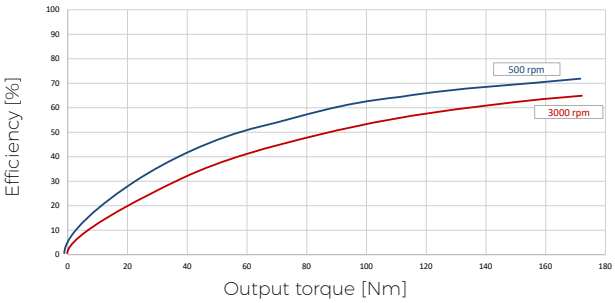

TS 115G, ratio 123 at 25°C
H = 0.96 arcmin
LM = 0.48 arcmin

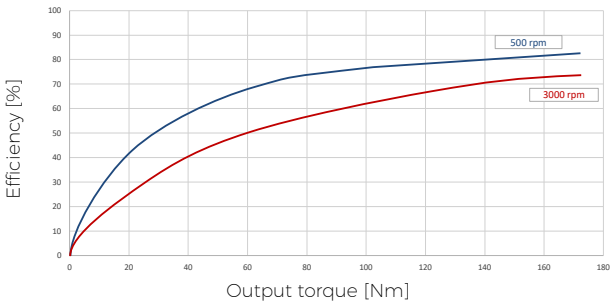

TS 115G, ratio 123 at 40°C
H = 0.96 arcmin
LM = 0.48 arcmin

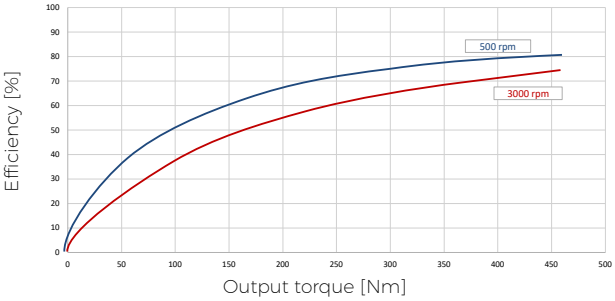

TS 155G, ratio 109 at 25°C
H = 0.49 arcmin
LM = 0.73 arcmin

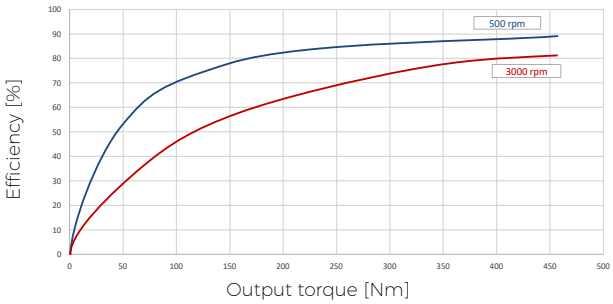

TS 155G, ratio 109 at 40°C
H = 0.49 arcmin
LM = 0.73 arcmin

Fig. 3.13: Efficiency charts

Courtesy of Steven Engineering, Inc - (800) 258-9200 - sales@steveneng.com - www.stevenengineering.com

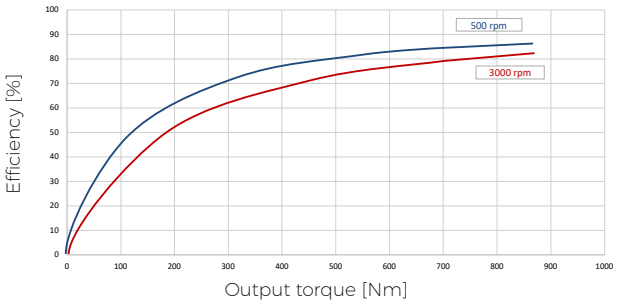

TS 185G, ratio 57 at 25˚C
H = 0.3 arcmin
LM = 0.47 arcmin

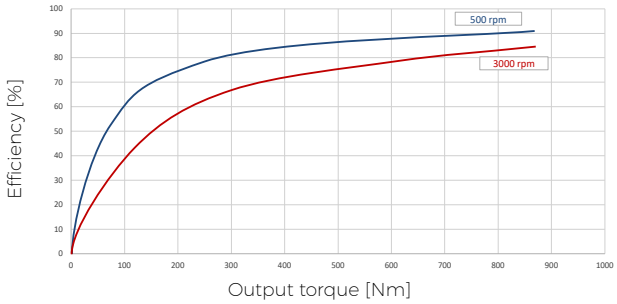

TS 185G, ratio 57 at 40˚C
H = 0.3 arcmin
LM = 0.47 arcmin

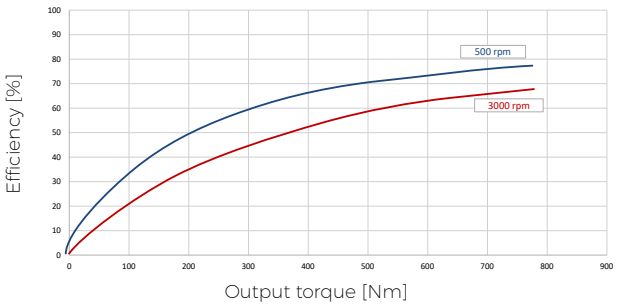

TS 185G, ratio 117 at 25˚C
H = 0.48 arcmin
LM = 0.37 arcmin

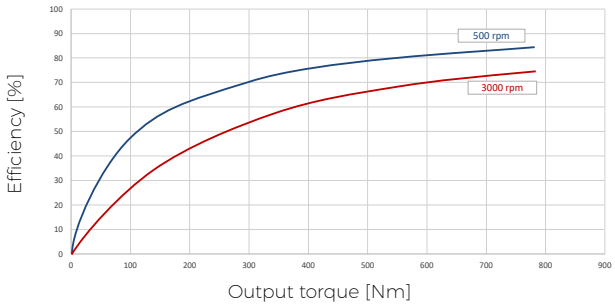

TS 185G, ratio 117 at 40˚C
H = 0.48 arcmin
LM = 0.37 arcmin

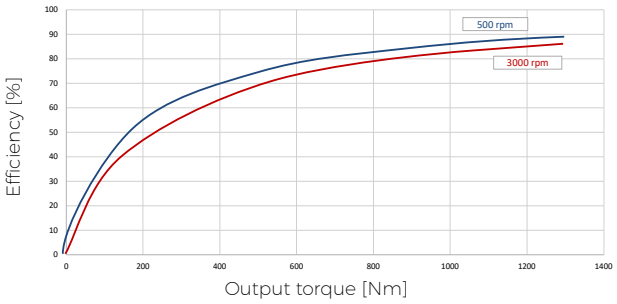

TS 225G, ratio 55 at 25˚C
H = 0.31 arcmin
LM = 0.41 arcmin

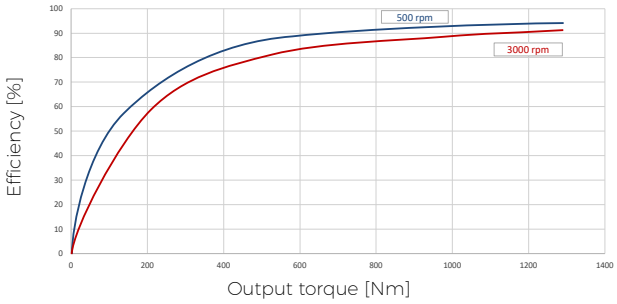

TS 225G, ratio 55 at 40˚C
H = 0.31 arcmin
LM = 0.41 arcmin

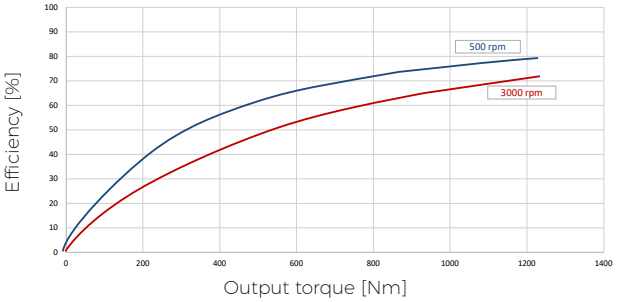

TS 225G, ratio 137 at 25˚C
H = 0.4 arcmin
LM = 0.38 arcmin

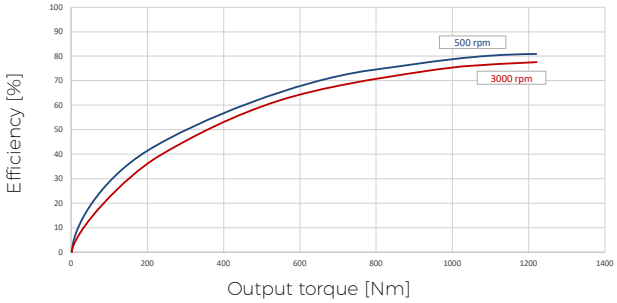

TS 225G, ratio 137 at 40˚C
H = 0.4 arcmin
LM = 0.38 arcmin

Fig. 3.13: Efficiency charts

SPINEA BY TIMKEN
Courtesy of Steven Engineering, Inc - (800) 258-9200 - sales@steveneng.com - www.stevenengineering.com

3.14 GH series efficiency chart

The efficiency of the TwinSpin® reduction gears depends on the input speed, output load, viscosity of lubricant, operating temperature and Lost Motion.

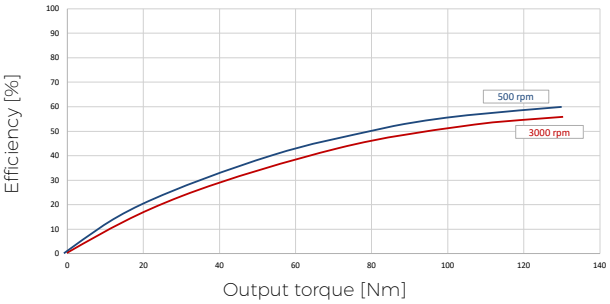

TS 115GH, ratio 103 at 25°C
H = 0.74 arcmin
LM = 0.43 arcmin

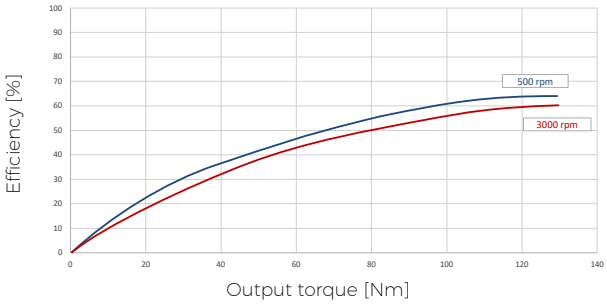

TS 115GH, ratio 103 at 40°C
H = 0.74 arcmin
LM = 0.43 arcmin

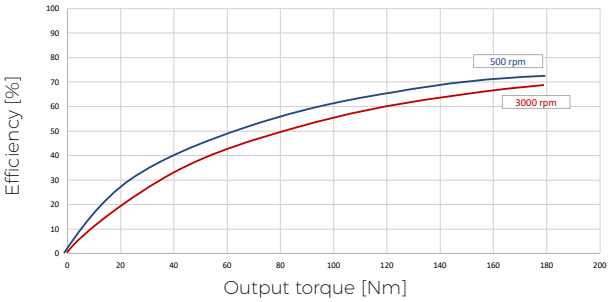

TS 125G, ratio 49 at 25°C
H = 1.23 arcmin
LM = 0,67 arcmin

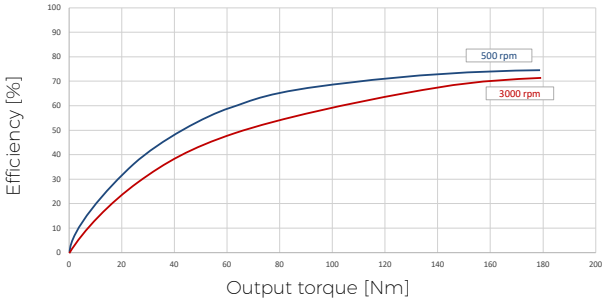

TS 125G, ratio 49 at 40°C
H = 1.23 arcmin
LM = 0.67 arcmin

Fig. 3.14: Efficiency charts

3.15 G series no-load running torque

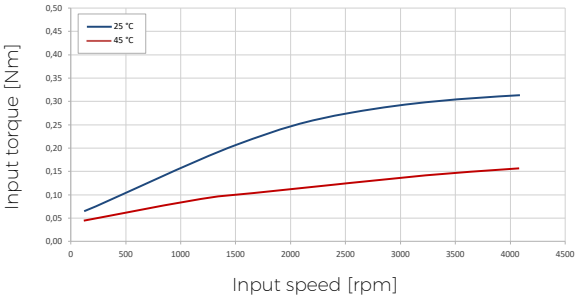

TS 075G, ratio 63, 75

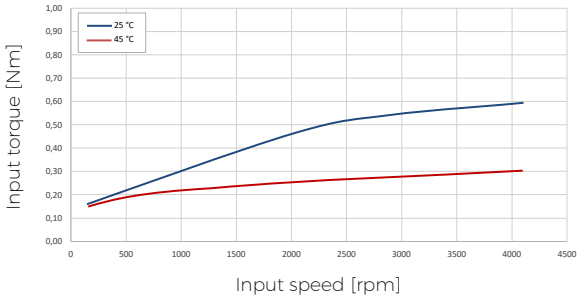

TS 085G, ratio 33, 63, 79

Fig. 3.15: No-load running torque charts

Courtesy of Steven Engineering, Inc - (800) 258-9200 - sales@steveneng.com - www.stevenengineering.com

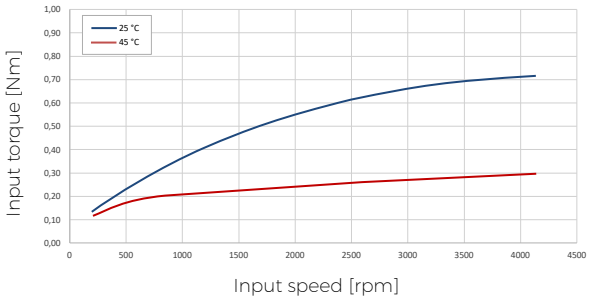

TS 095G, ratio 95, 63

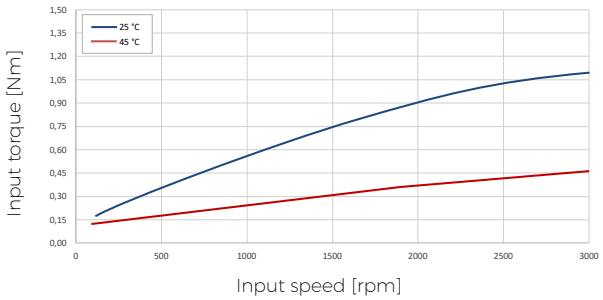

TS 115G, ratio 43, 63

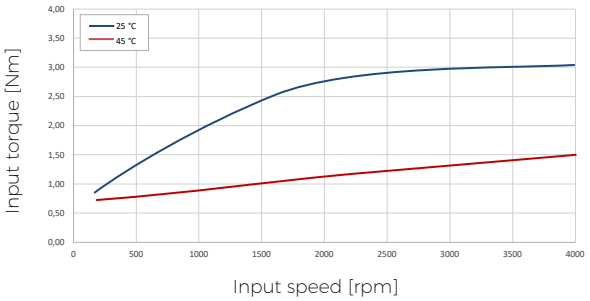

TS 155G, ratio 109

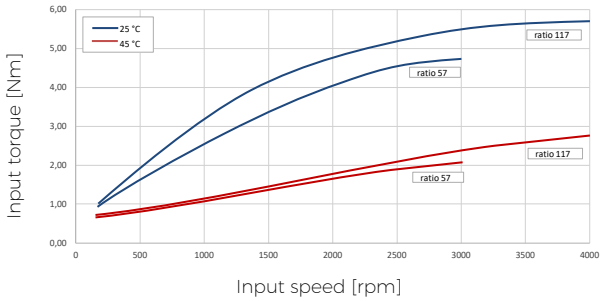

TS 185G, ratio 57, 117

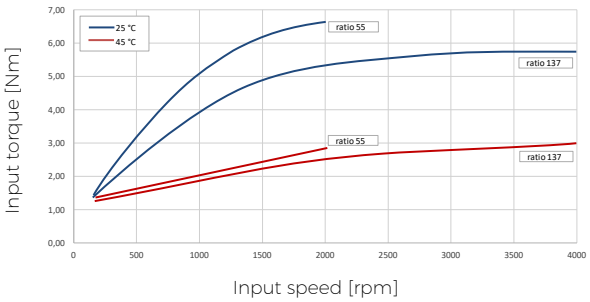

TS 225G, ratio 55, 137

Fig. 3.15: No-load running torque charts

3.16 GH series no-load running torque

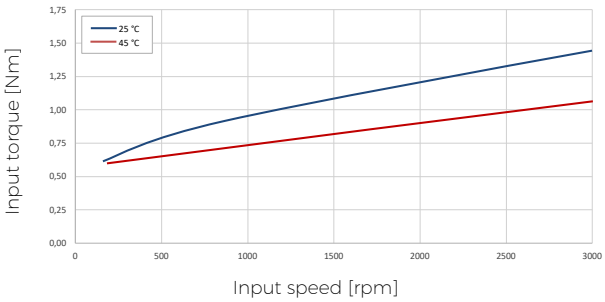

TS 115GH, ratio 55, 103

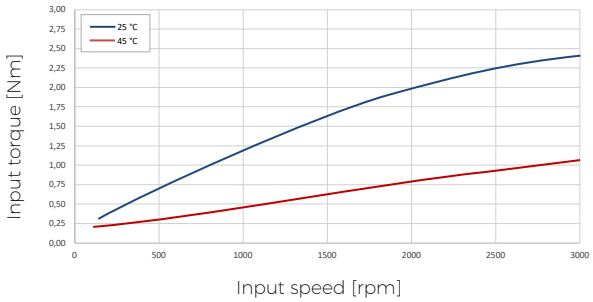

TS 125GH, ratio 49

Fig. 3.16: No-load running torque charts

SPINEA BY TIMKEN
Courtesy of Steven Engineering, Inc - (800) 258-9200 - sales@steveneng.com - www.stevenengineering.com

3.17 T, E, H, M series efficiency chart

The efficiency of the TwinSpin® reduction gears depends on the input speed, output load, viscosity of lubricant, operating temperature and Lost Motion.

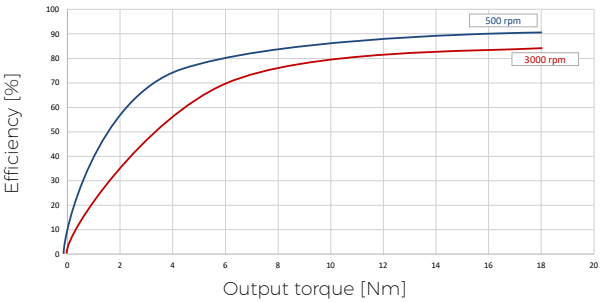

TS 050, ratio 63 at 50°C
H = 0.7 arcmin
LM = 0.56 arcmin
Max. speed = 3 000 rpm

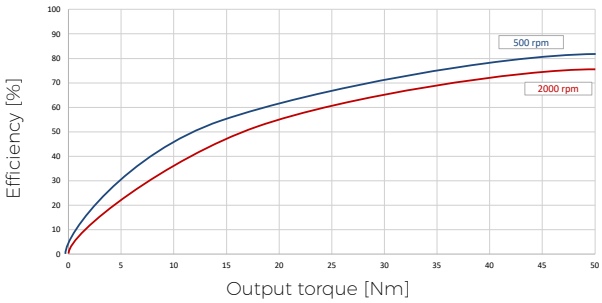

TS 070-TB, ratio 75 at 45°C
H = 0.7 arcmin
LM = 0.4 arcmin
Max. speed = 3 000 rpm

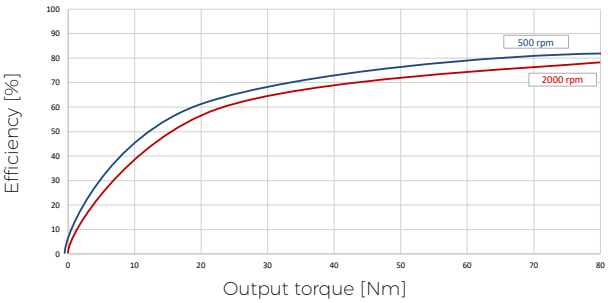

TS 080-TB, ratio 85 at 45°C
H = 0.87 arcmin
LM = 1 arcmin
Max. speed = 3 000 rpm

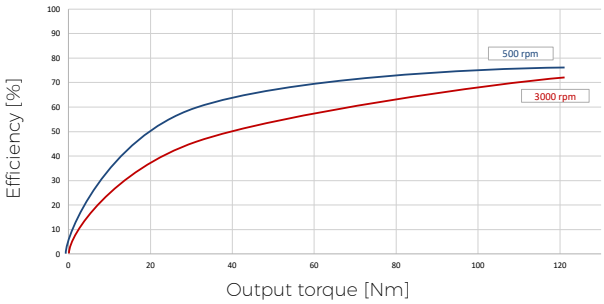

TS 110-TB, ratio 89 at 45°C
H = 0.43 arcmin
LM = 0.34 arcmin
Max. speed = 2 000 rpm

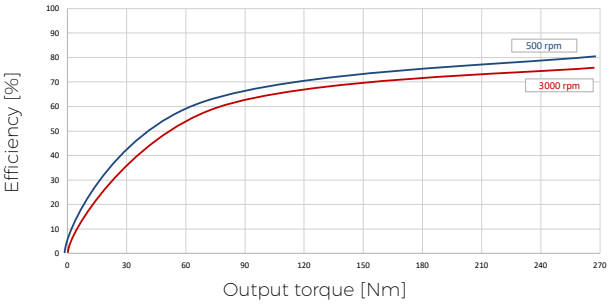

TS 140-TB, ratio 57 at 45°C
H = 0.5 arcmin
LM = 1 arcmin
Max. speed = 3 000 rpm

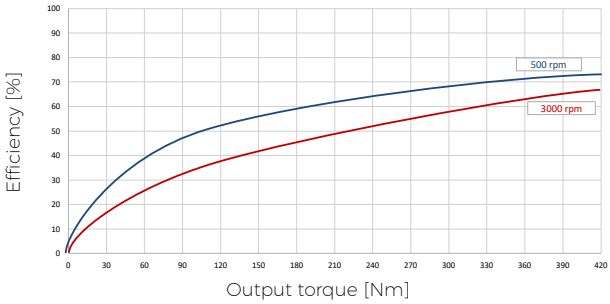

TS 170-H, ratio 69 at 60°C
H = 0.6 arcmin
LM = 0.5 arcmin
Max. speed = 3 000 rpm

Fig. 3.17: Efficiency charts

Courtesy of Steven Engineering, Inc - (800) 258-9200 - sales@steveneng.com - www.stevenengineering.com

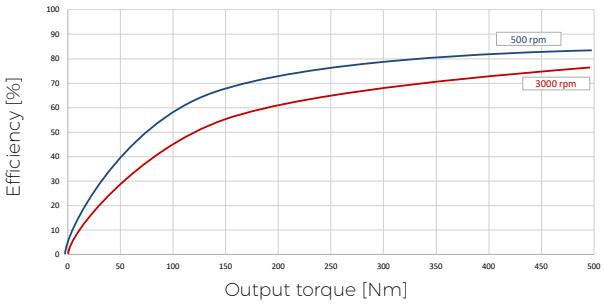

TS 170-TC, ratio 125 at 60°C
H = 1 arcmin
LM = 0.85 arcmin
Max. speed = 3 000 rpm

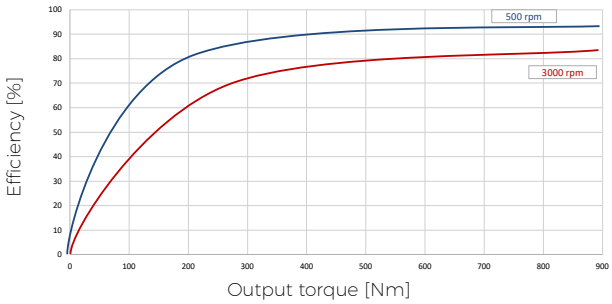

TS 200-TC, ratio 125 at 60°C
H = 0.71 arcmin
LM = 0.5 arcmin
Max. speed = 3 000 rpm

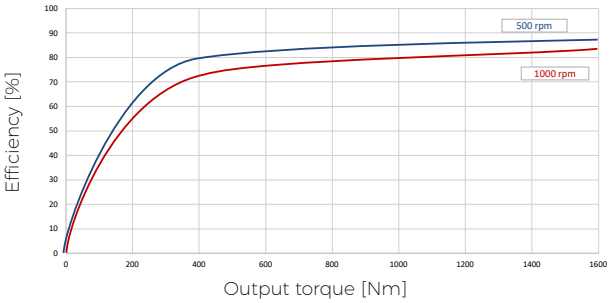

TS 240, ratio 37 at 50°C
H = 1 arcmin
LM = 0.82 arcmin
Max. speed = 1 000 rpm

Fig. 3.17: Efficiency charts

SPINEA BY TIMKEN
Courtesy of Steven Engineering, Inc - (800) 258-9200 - sales@steveneng.com - www.stevenengineering.com

3.18 G, GH, T, E, H, M series rotation direction and reduction ratio

In the following equations, $+i_{out}$ represents input and output rotations in one direction, $-i_{out}$ represents input and output rotations in the opposite direction. The available reduction ratio "i" values are provided in the rating tables in Chapter 2.

$$i_{out} = \frac{speed\ _{input}}{speed\ _{output}}$$

Tab. 3.18: Rotation direction and reduction ratio

Speed Reduction	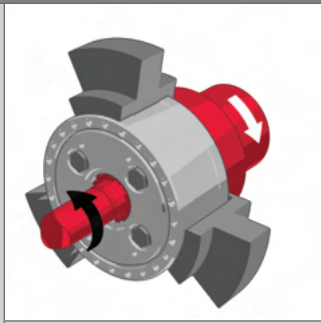	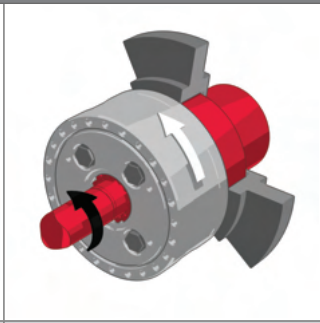	
	Input: Input shaft **Output:** Output flange **Fixed:** Case $i_{out} = -i$	**Input:** Input shaft **Output:** Case **Fixed:** Output flange $i_{out} = i + 1$	**Input:** Output flange **Output:** Case **Fixed:** Input shaft $i_{out} = \frac{i+1}{i}$
Speed Acceleration	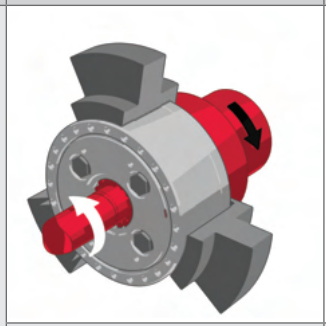	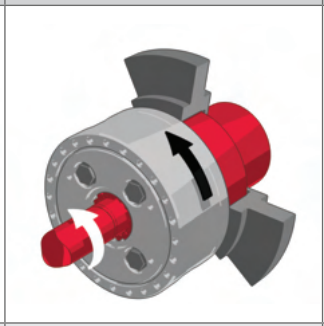	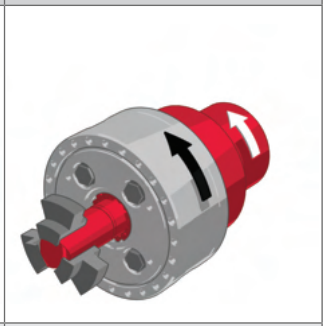
	Input: Output flange **Output:** Input shaft **Fixed:** Case $i_{out} = \frac{-1}{i}$	**Input:** Case **Output:** Input shaft **Fixed:** Output flange $i_{out} = \frac{1}{i+1}$	**Input:** Case **Output:** Output flange **Fixed:** Input shaft $i_{out} = \frac{i}{i+1}$
Differential configuration	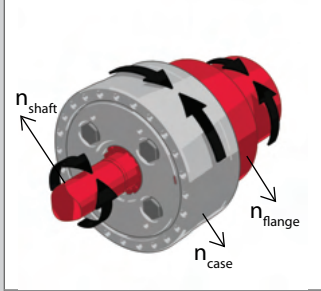	$\frac{1}{i+1} = \frac{n_{case} - n_{flange}}{n_{shaft} - n_{flange}}$	**Input:** **Output:** **Fixed:**
	All three parts can rotate		

4. TwinSpin® selection procedure

4.1 G, GH, T, E, H, M series duty cycle

T_1 – maximum output torque at acceleration [Nm]
T_2 – output torque at constant speed [Nm]
T_3 – maximum output torque at deceleration [Nm]
T_{acc} – max. acceleration / deceleration output torque [Nm]
T_{em} – allowable emergency torque
t_1 – acceleration time [s]
t_2 – constant motion time [s]
t_3 – deceleration time [s]
t_4 – idle time [s]
t – duty cycle time [s]
$n_{c\,max}$ – maximum continuous input speed [rpm]
n_1 – average input speed at acceleration [rpm]
n_2 – input speed at constant motion [rpm]
n_3 – average input speed at deceleration [rpm]
n_{max} – maximum input speed [rpm]

F_r – radial output flange load [N]
F_{r1}, F_{r2}, F_{r3} – radial output flange load during acceleration, during constant speed and during deceleration [N]
F_a – axial output flange load [N]
a – radial load F_r effective arm [m]
b – axial load F_a effective arm [m]
i – reduction ratio

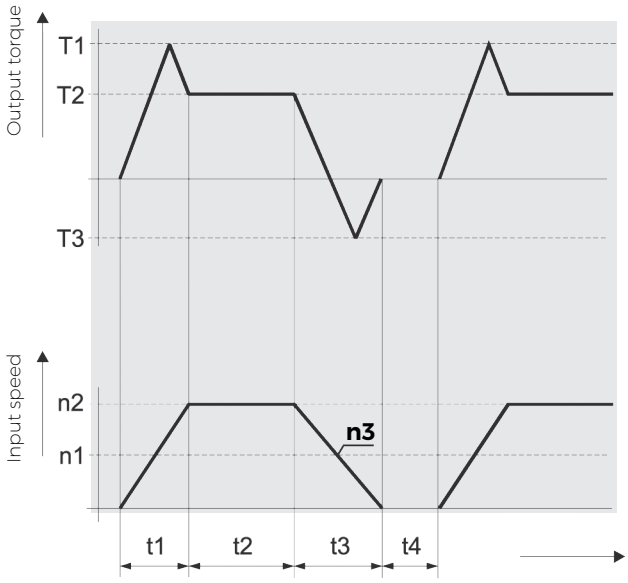

Fig. 4.1: Duty cycle

In case the duty cycle differs from the one shown above, please supply the drawing and values of your duty cycle. These values are important to us to be able to effectively determine the lifetimes of TwinSpin® reduction gears.

SPINEA BY TIMKEN
Courtesy of Steven Engineering, Inc - (800) 258-9200 - sales@steveneng.com - www.stevenengineering.com

4.2 G, GH, T, E, H series selection flowchart

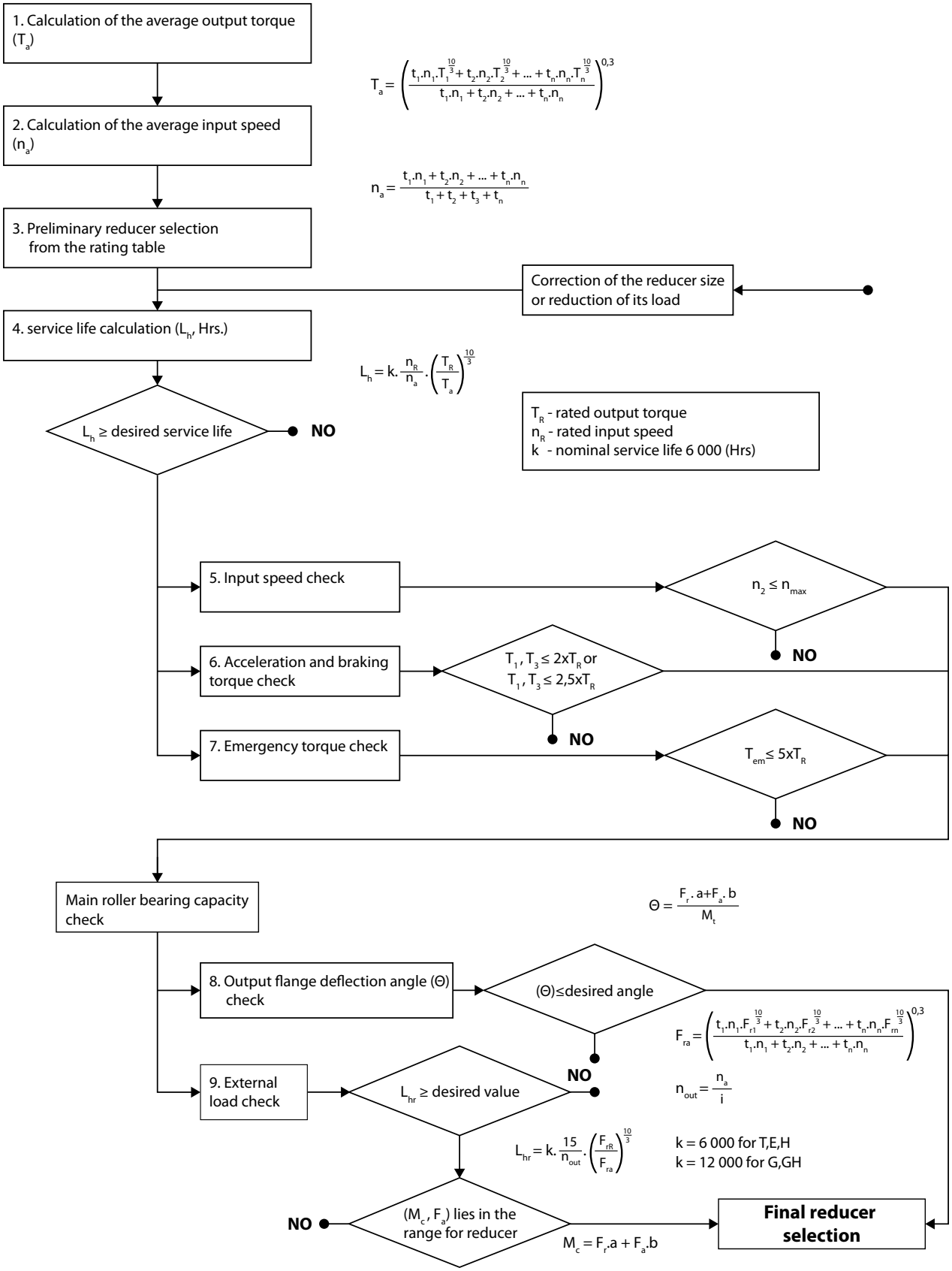

Fig. 4.2: Flowchart of the selection procedure for G, GH, T, E, H series

Courtesy of Steven Engineering, Inc - (800) 258-9200 - sales@steveneng.com - www.stevenengineering.com

4.2.1 M series selection flowchart

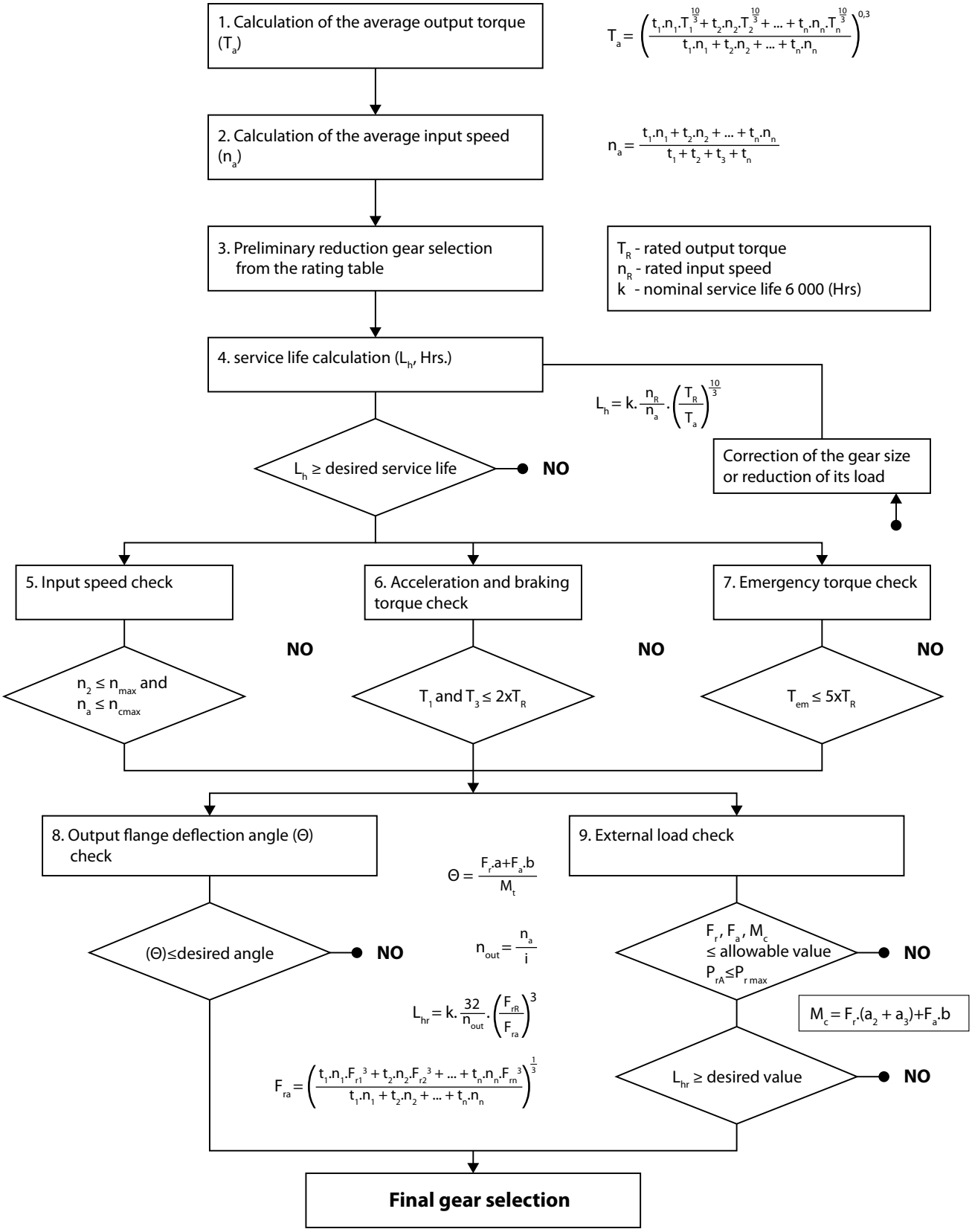

Fig. 4.2.1: Flowchart of the selection procedure for M series

SPINEA BY TIMKEN
Courtesy of Steven Engineering, Inc - (800) 258-9200 - sales@steveneng.com - www.stevenengineering.com

4.3 T, E, H selection example

Input data - selected conditions

T_1 = 420 Nm – Acceleration torque
T_2 = 310 Nm – Constant torque
T_3 = 520 Nm – Braking torque
T_{em} = 1 500 Nm – Emergency torque
n_1 = 1 500 rpm – Average acceleration input speed
n_2 = 3 000 rpm – Constant input speed
n_3 = 1 500 rpm – Average braking input speed
F_r = 1 500 N – Radial load
F_a = 1 500 N – Axial load
a_2 = 0.15m – Radial force tilting arm
b = 0.2m – Axial force tilting arm
Θ_{max} = 3 arcmin. – Max. allowable output flange deflection angle
t_1 = 0.3 sec. – Acceleration time
t_2 = 0.5 sec. – Constant speed time
t_3 = 0.2 sec. – Braking time

Calculation example

1. Calculation of average output torque (T_a)

$$T_a = \left(\frac{0.3 \cdot 1\,500 \cdot 420^{\frac{10}{3}} + 0.5 \cdot 3\,000 \cdot 310^{\frac{10}{3}} + 0.2 \cdot 1\,500 \cdot 520^{\frac{10}{3}}}{0.3 + 1\,500 + 0.5 \cdot 3\,000 + 0.2 \cdot 1\,500} \right)^{0.3} = 379.6\ Nm$$

2. Calculation of average input speed (n_a)

$$n_a = \frac{0.3 \cdot 1\,500 + 0.5 \cdot 3\,000 + 0.2 \cdot 1\,500}{0.3 + 0.5 + 0.2} = 2\,250\ rpm$$

3. Preliminary selection of a reduction gear from the rating table (Chapter 2): **TS 170-141-TC**

Technical specifications of the selected reduction gear:

T_R = 495 Nm – Rated output torque
n_R = 2 000 rpm – Rated input speed
T_{acc} = 1 238 Nm – Maximum acceleration/deceleration output torque
T_{em} = 2 475 Nm – Allowable emergency torque
n_{max} = 4 000 rpm – Maximum input speed
M_t = 705 Nm/arcmin. – Tilting stiffness
M_{cmax} = 2 430 Nm – Maximum tilting moment (F_a = 0)
$F_{r\,max}$ = 19 200 N – Maximum radial force
$F_{a\,max}$ = 27 900 N – Maximum axial force (M_c = 0)

4. Service life calculation (L_h)

$$L_h = 6\,000 \cdot \frac{2\,000}{2\,250} \cdot \left(\frac{495}{379.6}\right)^{\frac{10}{3}} = 12\,919\ hrs$$

5. Input speed check (n_2, n_{max})

$$n_2 = 3\,000\ rpm < n_{max} = 4\,000\ rpm\ \textbf{ok}$$

Courtesy of Steven Engineering, Inc - (800) 258-9200 - sales@steveneng.com - www.stevenengineering.com

6. Acceleration and braking torque check (T_1, T_3, T_{acc})

$$T_1 = 420\ Nm < T_{acc} = 1\,238\ Nm\ \textbf{ok}$$
$$T_3 = 520\ Nm < T_{acc} = 1\,238\ Nm\ \textbf{ok}$$

7. Emergency braking torque check (T_{em})

$$T_{em} = 1\,500\ Nm < 2\,475\ Nm\ \textbf{ok}$$

8. Output flange tilting angle check (Θ)

$$\left(\theta = \frac{1\,500 \cdot 0.1885 + 1\,500 \cdot 0.2}{705} = \frac{582.75}{705} = 0^{\circ}0'49''\right) < \left(\theta_{max} = 3'\right)\ \textbf{ok}$$

9. External load check (F_r , F_a , M_c) Tilting arm (see Fig. 3.6)

$$a = a_1 + a_2$$
$$a_1 = \frac{L}{2} = \frac{77}{2} = 38.5\ mm = 0.0385\ m$$
$$a = 0.0385 + 0.15 = 0.1885\ m$$

$$F_r = 1\,500\ N < F_{max} = 19\,300\ N\ \textbf{ok}$$

Service life calculation of the main bearing (L_{hr}) at radial force F_r= 1 500 N

$$n_{out} = \frac{2\,250}{141} = 15.95$$

$$L_{hr} = 6\,000 \cdot \frac{15}{15.95} \cdot \left(\frac{19\,250}{1\,500}\right)^{\frac{10}{3}} = 27.9 \cdot 10^6\ hrs$$

Moment on the output flange

$$M_c = 1\,500 \cdot 0.1885 + 1\,500 \cdot 0.2 = 582.75\ Nm$$

Maximum allowable moment at axial force F_a= 1 500 N

$$M_{c\ allow} = M_{c\ max} - \frac{M_{c\ max} \cdot F_a}{F_{a\ max}} = 2\,430 - \frac{2\,430 \cdot 1\,500}{27\,900} = 2\,300\ Nm$$

$$M_c = 582.75 < M_{c\ allow} = 2\,300\ Nm\ \textbf{ok}$$

Based on Chapter 3.5, the point with the coordinates of (M_c, F_a) , i.e. (582.75 Nm; 1.5 kN), lies inside the range for the selected TS 170 reduction gear.
Since all the requirements have been met, selection of the TS 170-141-TC reduction gear is correct.

SPINEA BY TIMKEN
Courtesy of Steven Engineering, Inc - (800) 258-9200 - sales@steveneng.com - www.stevenengineering.com

4.3.1 M series selection example

Input data - selection conditions

T_1 = 15 Nm	– Acceleration torque
T_2 = 10 Nm	– Constant torque
T_3 = 14 Nm	– Braking torque
T_{em} = 25 Nm	– Emergency torque
t_1 = 0.3 sec.	– Acceleration time
t_2 = 0.5 sec.	– Constant speed time
t_3 = 0.2 sec.	– Braking time
n_1 = n_3 =1 500 rpm	– Average acceleration input speed / Average braking input speed
n_2 = 3 000 rpm	– Constant input speed
F_r = 300 N	– Radial load
F_a = 400 N	– Axial load
a_2=0.012 m	– Radial force tilting arm
b = 0.015 m	– Axial force tilting arm
Θ = 5'	– Max. allowable output flange deflection angle

Calculation example

1. Calculation of average output torque (T_a)

$$T_a = \left(\frac{0.3 \cdot 1\,500 \cdot 15^{\frac{10}{3}} + 0.5 \cdot 3\,000 \cdot 10^{\frac{10}{3}} + 0.2 \cdot 1\,500 \cdot 14^{\frac{10}{3}}}{0.3 \cdot 1\,500 + 0.5 \cdot 3\,000 + 0.2 \cdot 1\,500} \right)^{0.3} = 12\ Nm$$

2. Calculation of average input speed (n_a)

$$n_a = \frac{0.3 \cdot 1\,500 + 0.5 \cdot 3\,000 + 0.2 \cdot 1\,500}{0.3 + 0.5 + 0.2} = 2\,250\ rpm$$

3. Preliminary selection of a reduction gear from the rating table (Chapter 2): **TS 050-63-M-P6**

General specifications of the TwinSpin® reduction gear are:

T_R = 18 Nm	– Rated output torque
n_R = 2 000 rpm	– Rated input speed
T_{acc} = 36 Nm	– Max. acceleration/deceleration output torque
T_{em} = 90 Nm	– Allowable emergency torque
n_{max} = 5 000 rpm	– Maximum allowable input speed
$n_{c\,max}$ = 3 000 rpm	– Maximum continuous input speed
M_t = 4 Nm/arcmin.	– Tilting stiffness
a_1 = 0.02 m; a_2 = 0.012m	– Distance of action
a = 0.02 + 0.012 = 0.032 m	– Distance of action
$F_{r\,max}$ = 44/(a_2+0.0305) N	– Max. radial force
$F_{a\,max}$ = 1 900 N (F_r = 0, M_c = 0)	– Max. axial force (M_c=0)

4. Calculation of the M series TwinSpin® reduction gear life (Lh)

$$L_h = 6\,000 \cdot \frac{2\,000}{2\,250} \cdot \left(\frac{18}{12}\right)^{\frac{10}{3}} = 20\,605\ hrs$$

5. Control of input speed

$$n_2 = 3\,000\ rpm < 5\,000\ rpm \text{ and } n_a = 2\,250\ rpm < n_{c\,max} = 3\,000\ rpm$$

6. Control of acceleration and braking torque

$$T_1 = 15\ Nm < 36\ Nm \text{ and } T_3 = 14 < 36\ Nm$$

Courtesy of Steven Engineering, Inc - (800) 258-9200 - sales@steveneng.com - www.stevenengineering.com

7. Control of torque during emergency braking

$$T_{em} = 25\ Nm < 90\ Nm$$

8. Control of tilt angle Θ of the output flange

$$\theta = \frac{300 \cdot 0.032 + 400 \cdot 0.015}{4} = 3.9 < 5'$$

9. Control of external load on the reduction gear's output flange

a) $F_a = 400\ N < F_{a\,max} = 1\,900\ N$

b) $M_c = F_a \cdot b + F_r \cdot (a_2 + a_3)$
$M_c = 400 \cdot 0.015 + 300 \cdot (0.012 + 0.0095) = 12.45\ Nm$
$M_c = 12.45\ Nm < M_{c\,max} = 44\ Nm$

c) $F_{r\,max} = \frac{M_{c\,max}}{a_2 + 0.0305}$
$F_{r\,max} = \frac{44}{0.012 + 0.0305}$
$F_{r\,max} = 1035.3\ N$
$F_r = 300\ N < F_{r\,max}$

d) $P_{rA} = X \cdot \left(\frac{M_c}{L_1} + F_r\right) + Y \cdot F_a$

Calculation of coefficients X and Y according to Tab. 3.5.2b

$$\frac{R_{Ax}}{C_0} = \frac{F_a}{C_0} \rightarrow e$$
$$\frac{400}{3\,850} = 0.104 \rightarrow e = 0.30$$

$$\frac{R_{Ax}}{R_{Ay}} = \frac{F_a}{\frac{M_c}{L_1} + F_r} \rightarrow X, Y$$
$$\frac{400}{\frac{12.45}{0.021} + 300} = 0.448 > e \rightarrow X = 0.56; Y = 1.46$$

$$P_{rA} = X \cdot \left(\frac{M_c}{L_1} + F_r\right) + Y \cdot F_a$$
$$P_{rA} = 0.56 \cdot \left(\frac{12.45}{0.021} + 300\right) + 1.46 \cdot 400$$
$$P_{rA} = 1\,084\ N < P_{r\,max} = 2\,100\ N$$

Calculation of the main bearing life

$$n_{out} = \frac{2\,250}{63} = 35.71\ rpm$$
$$L_{hr} = 6\,000 \cdot \frac{32}{35.71} \cdot \left(\frac{1\,035.3}{300}\right)^3 = 220\,977\ hrs$$

Since all requirements have been met, selection of the TS 050-63-M reduction gear is correct.

SPINEA BY TIMKEN
Courtesy of Steven Engineering, Inc - (800) 258-9200 - sales@steveneng.com - www.stevenengineering.com

5. Assembly

5.1 G, GH, T, E, H, M series assembly manual

To ensure maximum performance of the TwinSpin® high precision reduction gear, it is important to pay attention to the installation, assembly accuracy, sealing and lubrication. Most motor adapter flanges are available upon request, please contact the sales department or your local sales representative for further assistance.

5.1.1 G, GH series tightening torques

For safe transmission of external loads applied to the TwinSpin® high precision reduction gear, it is required to use connecting screws of at least 10.9 class and to degrease contact surfaces of friction joints before the installation. Tightening torques of screws are shown in Tab. 5.1.1a.
Allowable values of torque transmitted through connecting screws on flange and case are shown in Tab. 5.1.1b.

Tab. 5.1.1a: Tightening torques of screws

Screw	Tightening torque [Nm]	Clamping force [N]	Screw material class and specification
M3	1.9 / 2.2	3 100 / 3 700	10.9 / 12.9*
M4	4.3 / 5.1	5 300 / 6 400	
M5	8.4 / 10.2	8 800 / 10 600	
M6	14 / 17	12 400 / 14 900	
M8	35 / 42	22 750 / 27 300	*10.9 / 12.9 R_m = 1 000 / 1 200 MPa - min. tensile strength of screw material $R_{p0.2}$ = 900 / 1 080 MPa - min. yield strengths
M10	70 / 85	36 200 / 43 500	
M12	122 / 147	52 900 / 63 500	

Tab. 5.1.1b: Allowable torques transmitted through connecting screws

	Output flange			Case		
Size	Number x screw	Pitch diameter [mm]	Transmitted torque [Nm]	Number x screw	Pitch diameter [mm]	Transmitted torque [Nm]
TS 075	12xM5	38	360	18xM3	69	340
TS 085	14xM5	44	490	18xM4	81	700
TS 095	18xM4	53	450	18xM4	88	760
TS 115	18xM5	68	970	18xM4	108	930
TS 125	18xM6	71	1 190	18xM5	116	1 380
TS 155**	28xM8	96	2 950	28xM5	146	2 670
TS 185**	24xM8	119	4 870	30xM6	177	4 940
TS 225**	32xM8	150	8 190	24xM8	207	8 470

** Screw material 10.9

5.1.2 T series installation examples - unsealed gears

• Description of T model installations on Fig. 5.1.1 a, b, c, d:

Fig. 5.1.1 (a, b, c, d) shows examples of possible high precision reduction gear installations, their connections and sealing methods. In case of direct connections (case a) of the reduction gear with motor shaft, tolerances must be observed to avoid uncontrolled bending pressure and overload of the motor shaft. The tolerance values are given in Tab. 5.1.5.
Tab. 5.1.1a shows direct method of connection between the motor shaft and the reduction gear shaft, where the motor torque is transmitted through a keyway. The advantage of this connection is a short drive design length. This method of connection can be used if the motor shaft has a keyway and its diameter is identical with the diameter of the hole in the reduction gear shaft.
Fig. 5.1.1b shows the most common method of connection by using a flange with shaft seal.
If the motor shaft does not have a keyway or its diameter is not equal to the diameter of the hole in the reduction gear shaft, then rigid (Fig. 5.1.1c) or flexible couplings (Tab. 5.1.1b) may be used.
A toothed pulley may be fixed with a shaft inserted into the hole of the reduction gear according to Fig. 5.1.1d, or with reduction gear with an extended shaft.
When installing the reduction gear, please observe the dimensional tolerances of mounting diameters and prevent contamination of the reduction gear and/or leakage of the lubricant (see Fig. 5.1.2.)
Motors that meet the standard flange and keyway tolerances, as specified in the DIN 42955 standard, are acceptable for standard applications. To make use of the overall performance and lifetime characteristics of TwinSpin® and for high precision applications, the manufacturer recommends choosing motors that comply with DIN 42955R standard.
Please contact the sales department or your local sales representative for further details.

Courtesy of Steven Engineering, Inc - (800) 258-9200 - sales@steveneng.com - www.stevenengineering.com

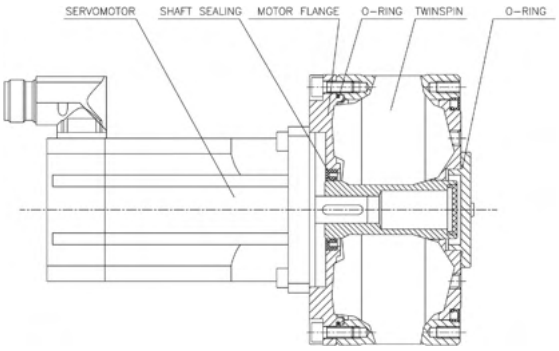

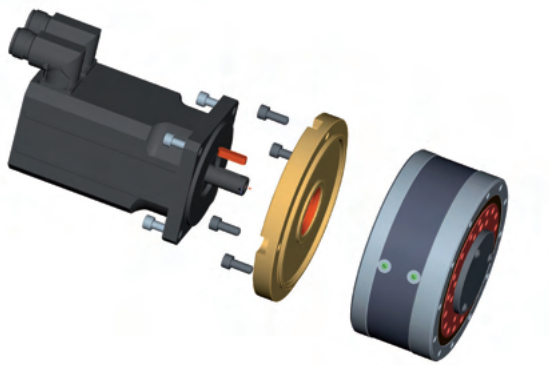

Fig. 5.1.1a:

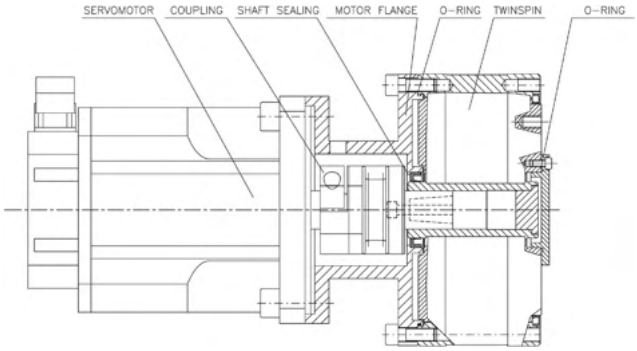

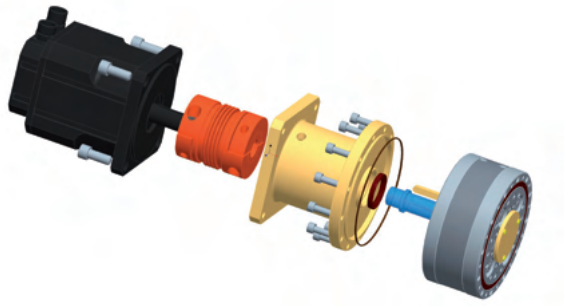

Fig. 5.1.1b:

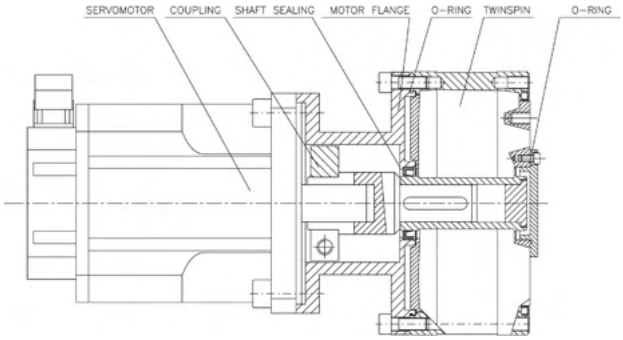

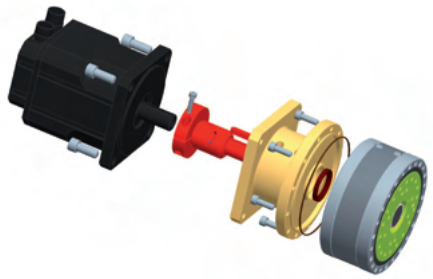

Fig. 5.1.1c:

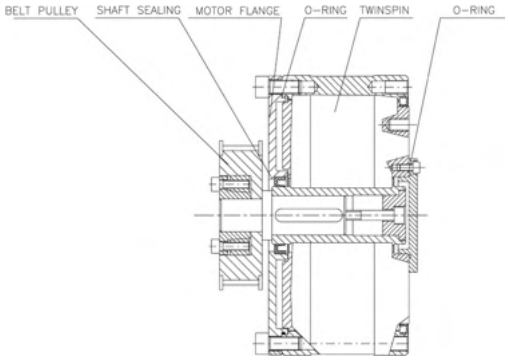

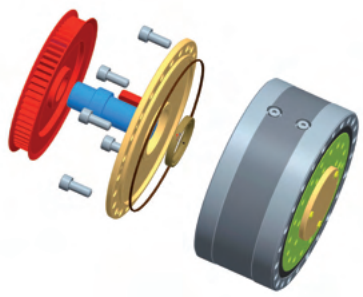

Fig. 5.1.1d:

Fig. 5.1.1: Most frequent connections

SPINEA BY TIMKEN

Courtesy of Steven Engineering, Inc - (800) 258-9200 - sales@steveneng.com - www.stevenengineering.com

5.1.2 T series installation procedure

Prior to installation, wipe off the protective oil film from the reduction gear surface with a clean and dry cloth. Degrease the contact surfaces.

Please contact the sales department or your local sales representative for further information.

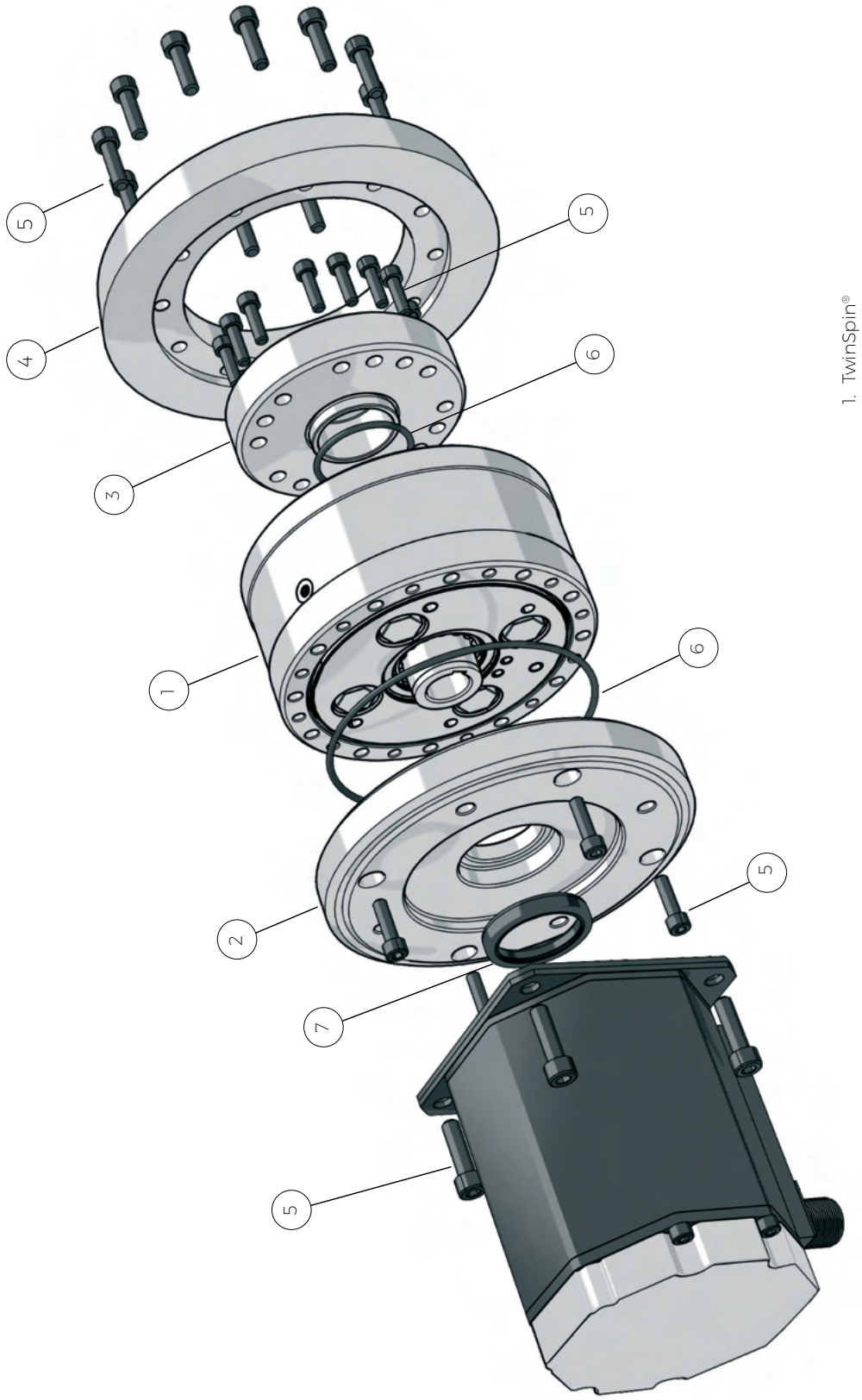

1. TwinSpin®
2. Motor flange
3. Output
4. Frame
5. Screws
6. O - ring
7. Shaft sealing

Fig. 5.1.2: T series installation procedure

Courtesy of Steven Engineering, Inc - (800) 258-9200 - sales@steveneng.com - www.stevenengineering.com

5.1.3 Dimensions and tolerances of the G series connecting parts example

Tab. 5.1.3a: Dimension table of input and output flanges of the G series TwinSpin® reduction gears [in mm] Fig. 5.1.3

Type	ØA $^{-0.03}_{-0.06}$	ØB -0.1	ØC +0.1	ØD +0.1	ØE +0.2	ØF H8	ØG	G5	ØE1	C1 +0.2	G1 -0.05	H1
TS 075	56.4	53.8	53	30	20.4	25	59.5	1.5	2.3	2	4.8	3
TS 085	63	61.6	59	39	30.4	35	67.5	1.3	2.7	2	5.2	4.5
TS 095	71	68.9	68	40	30.4	36	50	1.5	2.8	2	5	2
TS 115	90.2	87.9	87	45	32	37	95	1.5	2.8	1.8	5	2
TS 155	123	120.8	92	55	41	45	129		3.2	2	5.2	4
TS 185	147.7	145.2	142.5	62	49	52	154	6	3.3	2	6.1	7.5
TS 225	176	173.8	172	62	49	52	184.5	1.5	4.3	2	6.1	6

Type	A1	B1	K1	K2	G2 +0.2	C2	E2	A2	F2	O-ring / O-Ring	
TS 075	R 1	0.5x30°	R 0.2	0.3	6	2	0.5	R 1	1.5	52x1.5	FPM75
TS 085	R 1	0.5x30°	R 0.2	0.2	7.4	1.5	0.5	R 1	3.2	58x1	FPM70
TS 095	R 1	0.7x30°	R 0.2	0.2	6.2	2.3	0.5	R 1	0.5	68x1.5	NBR70
TS 115	R 1	0.7x30°	R 0.2	0.2	5.5	2.2	0.5	R 1	0.5	86x1.5	FPM80
TS 155	R 2	0.8x30°	R 0.2	0.2	11.2	2.2	1x20°	R 4	4.5	115x1.5	FPM80
TS 185	R 4	0.5x30°	R 0.3	R 0.3	9.5	3.1	1x20°	R 3	1.5	140x1.5	NBR70
TS 225	R 3	0.5x30°	R 0.3	R 0.3	9.5	3.6	1x20°	R 3	2.5	167x1.5	NBR70

Type	Rotary shaft seals		
TS 075	15x25x5	75FKM 585	Without dust lip
TS 085	18x35x7	FPM DIN 3760A	Without dust lip
TS 095	24x36x6	FPM DIN 3760A	Without dust lip
TS 115	25x37x5	FPM DIN3760A	Without dust lip
TS 155	30x45x7/9	75FKM 585	MSS1
TS 185	38x52x8.5/10.5	75FKM 585	MSS1
TS 225	38x52x8.5/10.5	75FKM 585	MSS1

Note:
Dimensions and technical parameters of the sealings should to be observed according to the data contained in the table. Possible changes should be discussed with the manufacturer.

SPINEA BY TIMKEN
Courtesy of Steven Engineering, Inc - (800) 258-9200 - sales@steveneng.com - www.stevenengineering.com

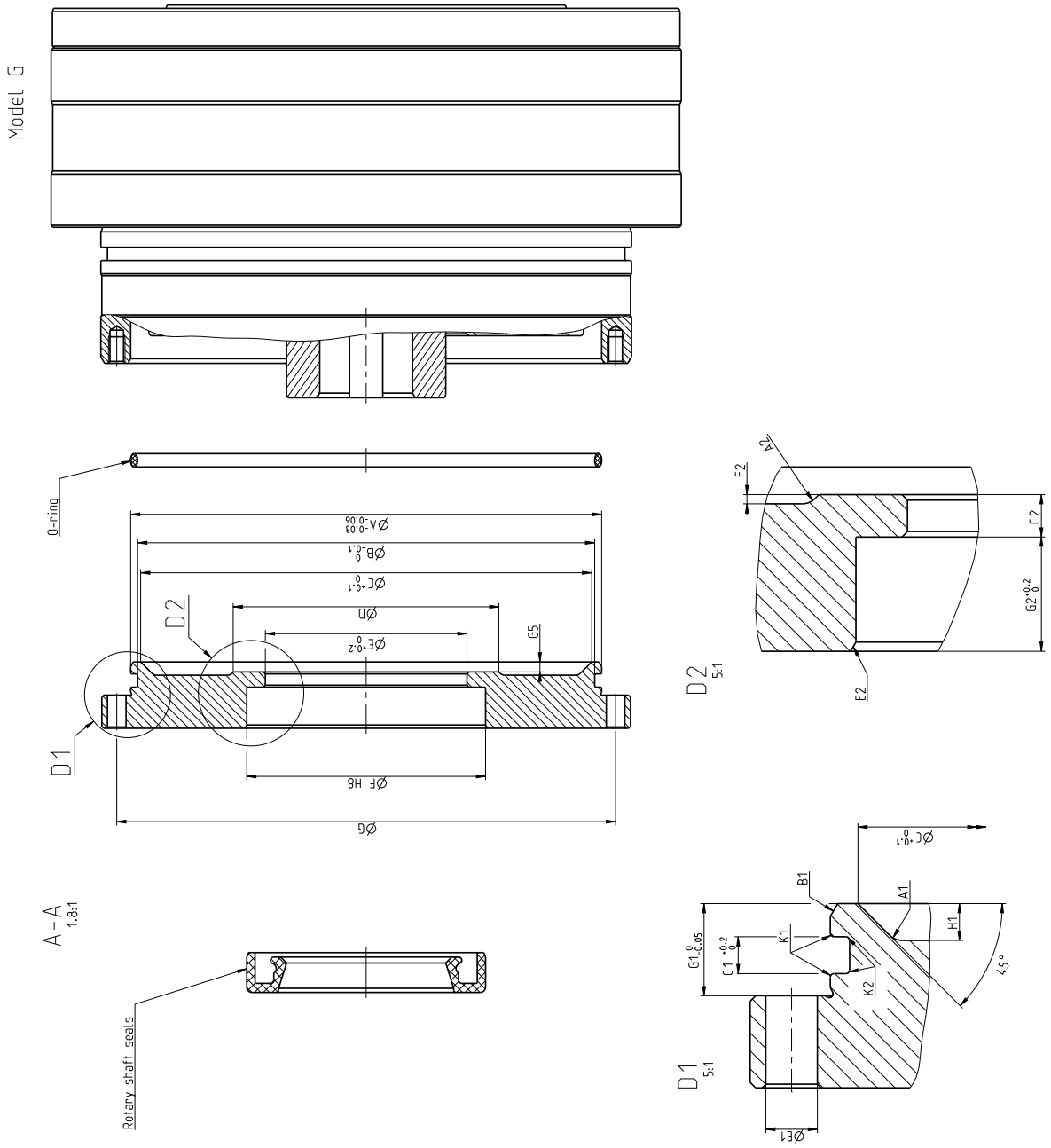

Fig. 5.1.3: Dimensions of the TwinSpin® G series reduction gear input and output flanges

Courtesy of Steven Engineering, Inc - (800) 258-9200 - sales@steveneng.com - www.stevenengineering.com

5.1.4 Dimensions and tolerances of the **T** series connecting parts example

Tab. 5.1.4a: Dimension table of input and output flanges of the T series TwinSpin® reduction gears [in mm] Fig. 5.1.4

Type	ØA g6	ØB2	ØB h9	ØC + 0.1	ØD	ØE	ØF H8	ØG	ØH	ØJ j6	ØK + 0.2	ØL
TS 060	-	69	49.2	-	-	22	26	57	12.5	15.5	18	42
TS 070	59.3	-	57.9	57.9	34	28	30	64	22	26	-	42
TS 080	-	86	65	-	-	28	32	73	18	22.3	25	69
TS 110	93	-	90	90	36	29	32	100	24	32	33	69
TS 140	119	-	116	112	48	39	42	127	34	42	43	92
TS 170	145	-	142	138	54	44	47	156	39	47	48	110
TS 200	170	-	167	167	62	48	52	183	43	52	53	131
TS 240	-	250	201.3	-	-	50	55	220	47	57	60	110
TS 300	-	312	249.6	-	-	50	55	274	50	60	66	131

Type	ØN	ØP H7	ØR	ØS	ØT	A1	A2	A3	A4	B1	B2	B3
TS 060	4.3	63	51	57	3.2	-	-	R 0.2	R 0.3	-	-	0.5 × 45°
TS 070	4.3	70	58	64	3.2	R 2	R 0.8	-	-	0.3 × 45°	0.3 × 45°	0.3 × 45°
TS 080	5.3	80	65	73	4.3	-	-	R 0.3	R 0.3	-	-	0.5 × 45°
TS 110	6.4	110	88	100	5.3	R 0.8	R 0.8	R 0.2	-	0.3 × 45°	0.5 × 45°	0.5 × 45°
TS 140	6.4	140	115	127	6.4	R 0.8	R 0.8	R 0.2	-	0.5 × 45°	0.5 × 45°	0.5 × 45°
TS 170	8.4	170	140	156	8.4	R 0.8	R 0.8	R 0.3	-	0.5 × 45°	0.5 × 45°	0.5 × 45°
TS 200	10.5	200	165	183	10.5	R 0.8	R 0.8	R 0.3	-	0.5 × 45°	0.5 × 45°	0.5 × 45°
TS 240	13	240	201	220	12	-	-	R 0.4	R 0.4	-	-	0.5 × 45°
TS 300	17	300	248	274	16	-	-	R 0.4	R 0.4	-	-	0.5 × 45°

Type	C1 + 0.2	C2	C3	E1 H12	E2	E3	F2	F3	G1–0.1	G2	G3+0.05	B3
TS 060	-	2	4	3.2	1.5	3	-	R 0.5	-	7.5	0.7	0.5 × 45°
TS 070	1.4	0.7	5	3.2	1.5	5	2.7	R 0.5	2.8	5	-	0.3 × 45°
TS 080	-	1.5	4	4.3	1.5	3	-	R 0.5	-	7	1.1	0.5 × 45°
TS 110	2	0.7	5	5.3	1.5	5	4.5	R 0.5	3.5	6	0.7	0.5 × 45°
TS 140	2	0.7	5	6.4	1.5	5	2	R 0.5	3.5	6	0.7	0.5 × 45°
TS 170	2	1	5	8.4	1.5	5	3.5	R 0.5	3.5	7	1.1	0.5 × 45°
TS 200	2.5	2	5	10.5	1.5	5	5.5	R 0.8	5.5	7.5	1.1	0.5 × 45°
TS 240	-	-	6	13	1.5	4.5	-	R 0.5	-	7.5	1.5	0.5 × 45°
TS 300	-	-	6	17	1.5	5	-	R 0.5	-	8.5	2.3	0.5 × 45°

Type	G5	H1	H5 + 0.1	M + 0.2	V	K1. K5	S5 + 0.2	O-ring A*/ O-Ring A*	
TS 060	-	-	0.7	1.4	R 0.5	-	1.4	49 × 1	Viton-FPM70
TS 070	2.8	5.5	-	-	R 0.2	0.2 × 45°	1.4	55 × 1	Viton-FPM70
TS 080	-	-	0.7	1.4	R 0.5	-	1.4	65 × 1	Viton-FPM70
TS 110	1.5	6	-	1.4	R 0.5	0.2 × 45°	-	88.62 × 1.78	Viton-FPM70
TS 140	1.5	3.5	-	1.4	R 0.5	0.2 × 45°	-	114 × 1.78	Viton-FPM70
TS 170	0	3.5	-	2.1	R 0.5	0.2 × 45°	-	140 × 1.78	Viton-FPM70
TS 200	2.5	8	-	2.1	R 0.5	0.2 × 45°	-	165 × 2	Viton-FPM70
TS 240	-	-	1.1	2.8	R 0.5	-	2.1	201.5 × 1.5	Viton-FPM70
TS 300	-	-	1.5	3.9	R 0.5	-	2.8	250 × 2	Viton-FPM70

Type	O-ring B*		Double lip oil sealing			
			"A"		"B"	
TS 060	18 × 1	Viton-FPM70	11 × 26 × 7	FPM 70	-	-
TS 070	-	Viton-FPM70	20 × 30 × 5	75FKM 595	-	-
TS 080	26 × 1.5	Viton-FPM70	16 × 32 × 7	75FKM 595	-	-
TS 110	33.5 × 1	Viton-FPM70	22 × 32 × 6	75FKM 595	22 × 32 × 6	75FKM 595
TS 140	43 × 1	Viton-FPM70	30 × 42 × 6	75FKM 595	30 × 42 × 6	75FKM 595
TS 170	48 × 1.5	Viton-FPM70	35 × 47 × 7	75FKM 595	35 × 47 × 7	75FKM 595
TS 200	54 × 1.5	Viton-FPM70	38 × 52 × 7	75FKM 595	38 × 52 × 7	75FKM 595
TS 240	60 × 2	Viton-FPM70	40 × 55 × 7	75FKM 595	-	-
TS 300	66 × 3	Viton-FPM70	42 × 55 × 8	75FKM 595	-	-

Note:
Dimensions and technical parameters of the sealings should to be observed according to the data contained in the table. Possible changes should be discussed with the manufacturer.
Fig. 5.1.1 (a, b, c, d) shows examples of possible high precision reduction gear installations, their connections and sealing methods.

SPINEA BY TIMKEN
Courtesy of Steven Engineering, Inc - (800) 258-9200 - sales@steveneng.com - www.stevenengineering.com

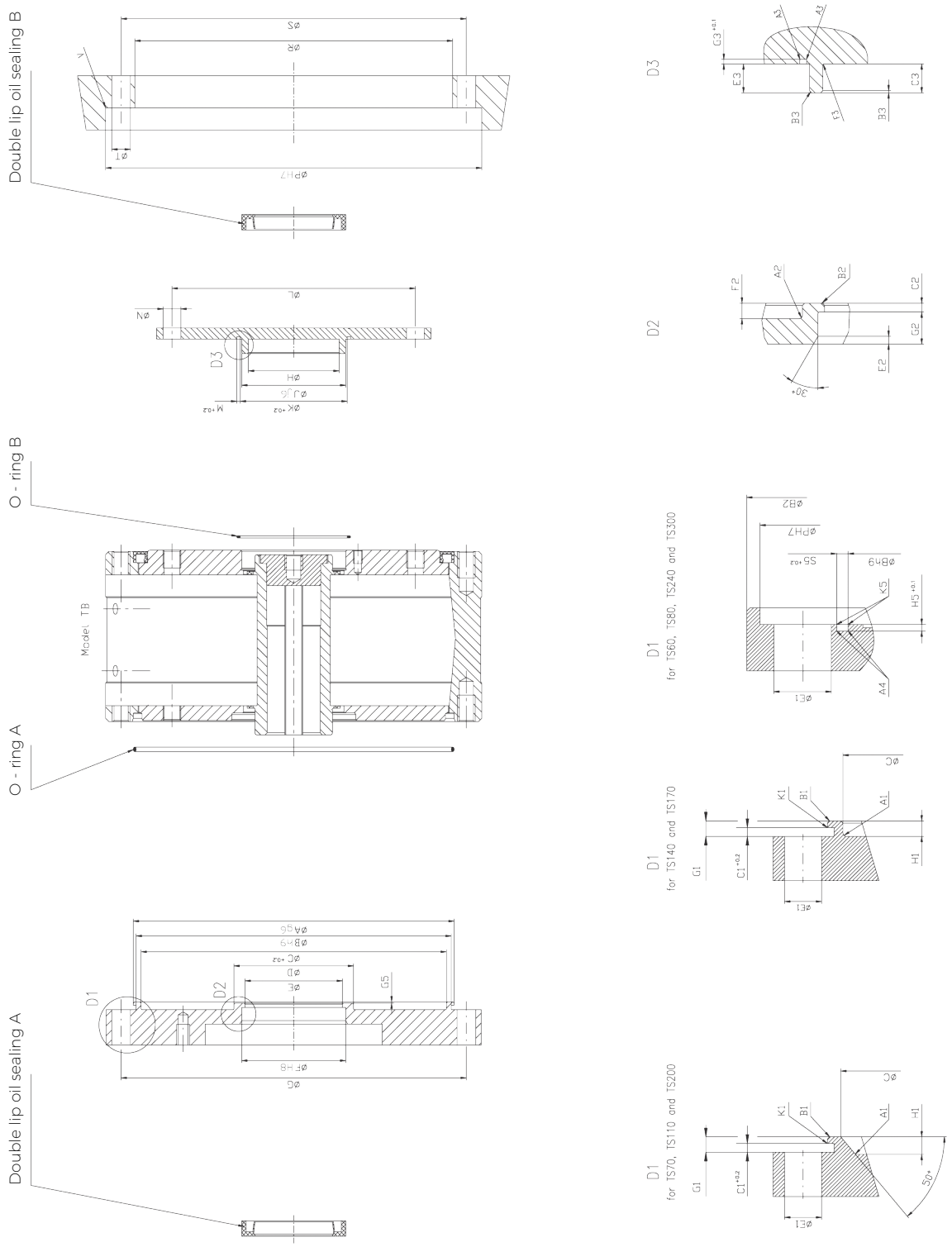

Fig. 5.1.4: Dimensions of the TwinSpin® T series reduction gear input and output flanges

SPINEA BY TIMKEN
Courtesy of Steven Engineering, Inc - (800) 258-9200 - sales@steveneng.com - www.stevenengineering.com

5.1.5 **T** series connecting parts tolerances

According to the DIN 42955 R standard

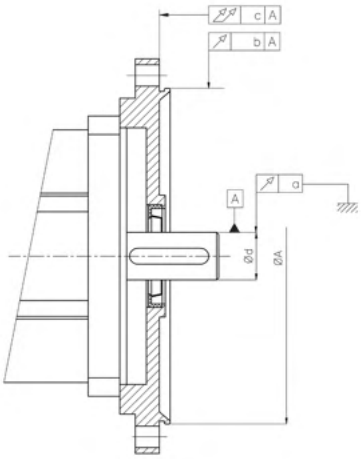

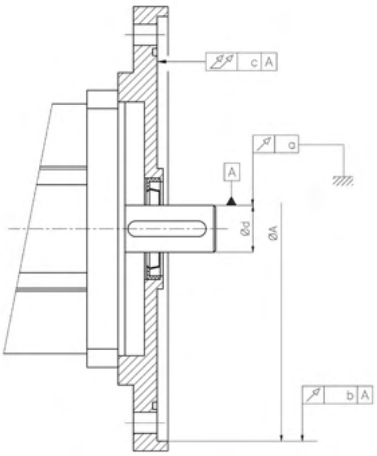

Fig. 5.1.5: Required tolerances of the T series
a) valid for TS 070, TS 110, TS 140, TS 170, TS 200
b) valid for TS 060 TS 080, TS 240, TS 300

Tab. 5.1.5: T series - required tolerances [mm]

Size	a	b	c	Ød	ØA
TS 060	0.015	0.040	0.038	6 k6	63 H7
TS 070	0.018	0.040	0.038	11 k6	59.3 G6
TS 080	0.015	0.050	0.038	8 k6	80 H7
TS 110	0.018	0.050	0.044	14 k6	93 G6
TS 140	0.021	0.050	0.050	19 k6	119 G6
TS 170	0.021	0.050	0.050	24 k6	145 G6
TS 200	0.021	0.060	0.058	24 k6	170 G6
TS 240	0.021	0.063	0.058	28 k6	240 H7
TS 300	0.021	0.063	0.064	28 k6	300 H7

5.1.6 **T** series circumferential and face run-out values

Tab. 5.1.6: T series - circumferential and face runout values [mm]

Type	T	Z	R	A	C	D	T1	T2
TS 060	0.007	0.020	0.015	63 h7	15.5 H6	6 H7	0.05	0.05
TS 070	0.007	0.020	0.015	70 h7	26 H6	11 H7	0.05	0.05
TS 080	0.007	0.020	0.015	80 h7	22.3 H6	8 H7	0.06	0.05
TS 110	0.008	0.025	0.015	110 h7	32 H6	14 H7	0.07	0.06
TS 140	0.009	0.025	0.015	140 h7	42 H6	19 H7	0.07	0.06
TS 170	0.010	0.025	0.015	170 h7	47 H6	24 H7	0.07	0.06
TS 200	0.010	0.035	0.020	200 h7	52 H6	24 H7	0.08	0.06
TS 240	0.013	0.040	0.020	240 h7	57 H6	28 H7	0.08	0.06
TS 300	0.013	0.040	0.020	300 h7	60 H6	28 H7	0.08	0.06

SPINEA BY TIMKEN
Courtesy of Steven Engineering, Inc - (800) 258-9200 - sales@steveneng.com - www.stevenengineering.com

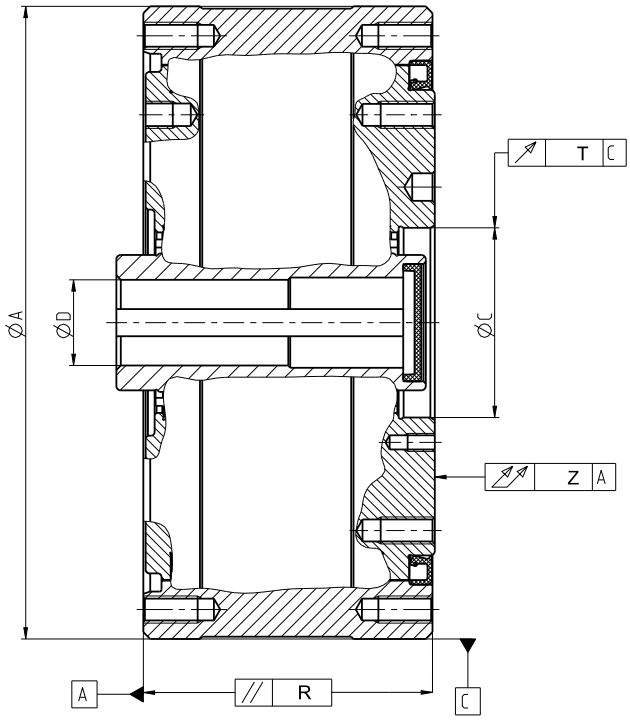

Fig. 5.1.6a: Tolerances of circumferential and face runout for direct connection of TwinSpin® high precision reduction gears with servomotor in accordance with DIN 42955 R

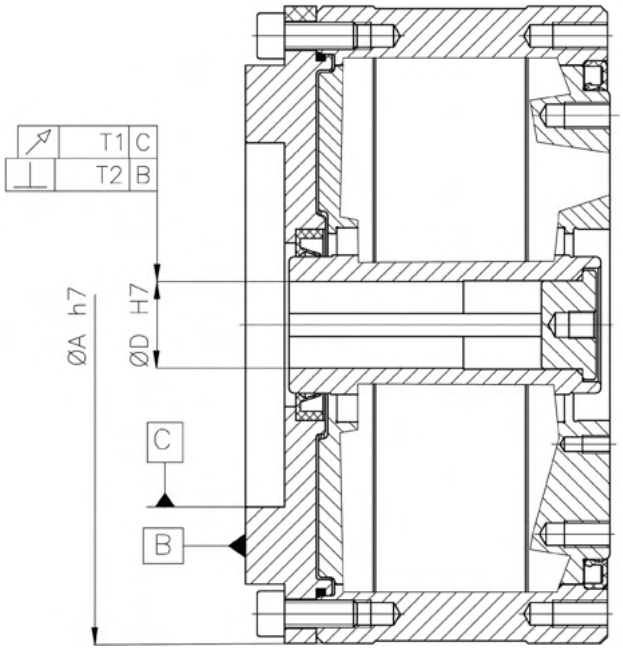

Fig. 5.1.6b: Circumferential and face runout values of the TwinSpin® T series

Courtesy of Steven Engineering, Inc - (800) 258-9200 - sales@steveneng.com - www.stevenengineering.com

5.1.7 T series tightening torques

For safe transmission of external loads applied to the TwinSpin® high precision reduction gear, it is required to use connecting screws of at least 10.9 class and to degrease contact surfaces of friction joints before the installation. Tightening torques of screws are shown in Tab. 5.1.7a.
Allowable torque transmitted through connecting screws on flange and case is shown in Tab. 5.1.7b.

Tab. 5.1.7a: Tightening torque of screws

Screw	Tightening torque [Nm]	Clamping force [N]	Screw material class and specification
M3	1,9	3 100	ISO 898 T1 10.9 or 12.9
M4	4,3	5 300	
M5	8,4	8 800	
M6	14	12 400	
M8	35	22 750	
M10	70	36 200	
M12	122	52 900	

Tab. 5.1.7b: Allowable torque transmitted through connecting screws

	Output flange			Case		
Size	Number × screw	Pitch diameter [mm]	Transmitted torque [Nm]	Number × screw	Pitch diameter [mm]	Transmitted torque [Nm]
TS 060	8 × M4	34	108	12 × M3	57	160
TS 070	14 × M4	42	233	16 × M3	64	238
TS 080	8 × M5	46	242	12 × M4	73	348
TS 110	14 × M6	69	898	12 × M5	100	792
TS 140	18 × M6	92	1 740	12 × M6	127	1 410
	8 × M6	74				
TS 170	18 × M8	110	3 700	12 × M8	156	3 200
	8 × M8	80				
TS 200	18 × M10	131	6 950	12 × M10	183	5 900
	8 × M10	95				
TS 240	14 × M12	160	8 800	12 × M12	220	10 400
TS 300	14 × M16	200	21 000	12 × M16	274	24 600

5.2 E series installation examples

5.2.1 E series installation examples - unsealed gears

Description of the E series installation:

Fig. 5.2.1a It is possible to use direct connection of the TwinSpin® reduction gear with a motor if the motor shaft has the same diameter as the hole in the reduction gear.

Fig. 5.2.1b It is possible to use connection of two different shafts by flexible couplings if the shafts have different diameters.

Fig. 5.2.1c Mounting of a toothed pulley on the input shaft of the TwinSpin® reduction gear.

Fig. 5.2.1 shows the examples of TwinSpin® reduction gear installations, connections and sealing methods. In case of direct connections of the reduction gear with a motor shaft, tolerances must be observed to avoid uncontrolled bending pressure and overload of the motor shaft. Tolerance values are shown in Tab. 5.2.3. When installing TwinSpin® reduction gears, observe dimensional tolerances of mounting diameters and avoid contamination of the high precision reduction gear and/or leakage of lubricant.

Motors that meet standard flange and keyway tolerances, as specified in the European DIN 42955 standard, are acceptable for standard use. In order to make use of the overall performance and durability of TwinSpin® and for high precision applications, the manufacturer recommends choosing motors that meet the European DIN 42955 R standard. Our sales department will be happy to provide you with additional information on the standards or technical assistance for your specific applications. Please contact the sales department or your local sales representative.

SPINEA BY TIMKEN
Courtesy of Steven Engineering, Inc - (800) 258-9200 - sales@steveneng.com - www.stevenengineering.com

Examples of drive connection with input shaft

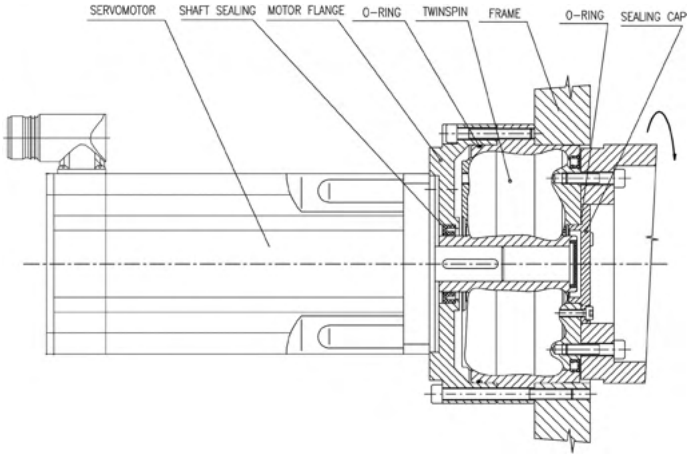

Fig. 5.2.1a: Direct connection of the reduction gear shaft with motor shaft

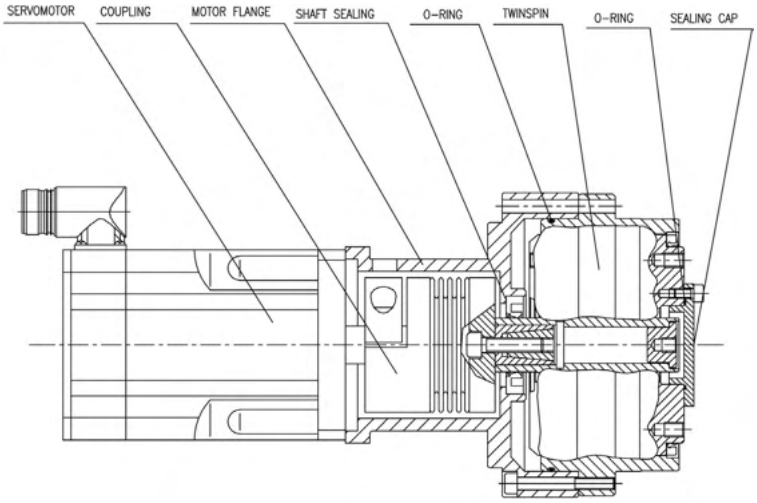

Fig. 5.2.1b: Connection of the motor with the reduction gear through a flexible coupling

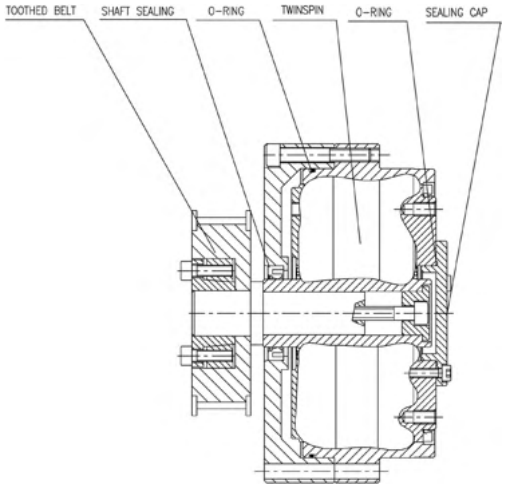

Fig. 5.2.1c: Connection of the reduction gear with a toothed pulley

Fig. 5.2.1: Most frequent connections

Note: The sealing cap should only be used with reduction gears TS 110, TS 140.
Other sizes are standardly delivered with sealing cup included (see E-series drawings).

Courtesy of Steven Engineering, Inc - (800) 258-9200 - sales@steveneng.com - www.stevenengineering.com

5.2.2 E series installation procedure

Prior to the installation, wipe off the protective oil film from the reduction gear's surface with a clean and dry cloth. TwinSpin® high precision reduction gears are not protected against corrosion. Please contact the sales department or your local sales representative for further information.

5.2.3 E series connecting parts dimensions and tolerances

Tab. 5.2.3: Dimensional data of the TwinSpin® high precision reduction gear input flange – E series [mm]

Type	Ø D H7	Ø D1	Ø D2	Ø D3	Ø D4	Ø D5	Ø D6 H8	H1	H2
TS 070	67	85	76	56	36	26	30	11.5	6.5
TS 080	75	95	85	60	38	28	32	14.5	7.5
TS 110	103	123	113	89	46	36	40	19	7
TS 140	128	150	140	111.5	50	38	42	15	8
TS 170	160	190	175	139	65	46	50	23	11
TS 200	186	225	206	176	66	46	52	30	5
TS 220	198	238	220	178	-	46	55	30	10

Type	H3	H4	H5	K × 30°	L	L1	L2	2 × M1
TS 070	2.5	2.5	6.5	1 × 30	14.5	4.5	6	M4
TS 080	2.5	2	8.5	1 × 30	16.5	5	8	M5
TS 110	2.5	2.5	8	1.5 × 30	21	5.5	10	M5
TS 140	5	2.5	9	1.5 × 30	21	6	10	M6
TS 170	7.5	2.5	9	2 × 30	24	5.5	12	M8
TS 200	0	3	9	2 × 30	27	6	12	M10
TS 220	0	3	9	2 × 30	32	8	12	M8

Type	M2, M3, M4	n × ØN	R1°	R2°	R3°	R4°	n × S1	4 × S2
TS 070	M4	3 × 10	30	12	15	-15	8 × Ø5.5	4 × Ø5.5
TS 080	M5	2 × 10	48	15	-	15	10 × Ø5.5	4 × Ø5.5
TS 110	M6	3 × 11	40	10	20	20	12 × Ø5.5	4 × Ø5.5
TS 140	M10 × 1	3 × 15	40	10	20	10	12 × Ø6.5	4 × Ø5.5
TS 170	M10 × 1	3 × 15	40	10	20	10	12 × Ø9	4 × Ø8.4
TS 200	M10 × 1	3 × 15	40	15	15	15	12 × Ø11	4 × Ø8.4
TS 220	M10 × 1	2 × 15	40	-	20	20	12 × Ø11	4 × Ø11

Type	Seal G1 (FPM 70)	O-ring G2 (FPM 70)	Plug		Flat sealing G3 DIN 7603 (cuprum)
TS 070	20 × 30 × 5	62 × 2	M4 × 8	DIN 7984	4 × 8 ×1
TS 080	16 × 32 × 7	70 × 2	M 5 × 8	DIN 7984	5 × 9 × 1
TS 110	22 × 40 × 7	95 × 2	M6 × 10	DIN 7984	6 × 10 × 1
TS 140	30 × 42 × 6	122 × 2	M10 × 1	DIN 908	10 × 14 × 1.5
TS 170	36 × 50 × 7	150 × 2	M10 × 1	DIN 908	10 × 14 × 1.5
TS 200	38 × 52 × 7	175 × 2	M10 × 1	DIN 908	10 × 14 × 1.5
TS 220	40 × 55 × 7	195 × 2	M10 × 1	DIN 908	10 × 14 × 1.5

Type	n × Ø B	Ø B1	Ø B2	Ø B3 j6	Ø B4	B5 + 0.2	C1	C2+0.05	O-ring G4
TS 110	3 × 4.3	42	27	32	33	1.4	6	0.7	33 × 1
TS 140	3 × 4.3	53	36	42	43	1.4	6.5	0.7	43 × 1
TS 220	3 × 5.3	75	69	110	-	-	4	-	110 × 3

Note:
The output flange of TwinSpin® high precision reduction gears TS 070-E, TS 080-E, TS 170-E and TS 200-E is factory sealed. No additional sealing cap is needed.

SPINEA BY TIMKEN
Courtesy of Steven Engineering, Inc - (800) 258-9200 - sales@steveneng.com - www.stevenengineering.com

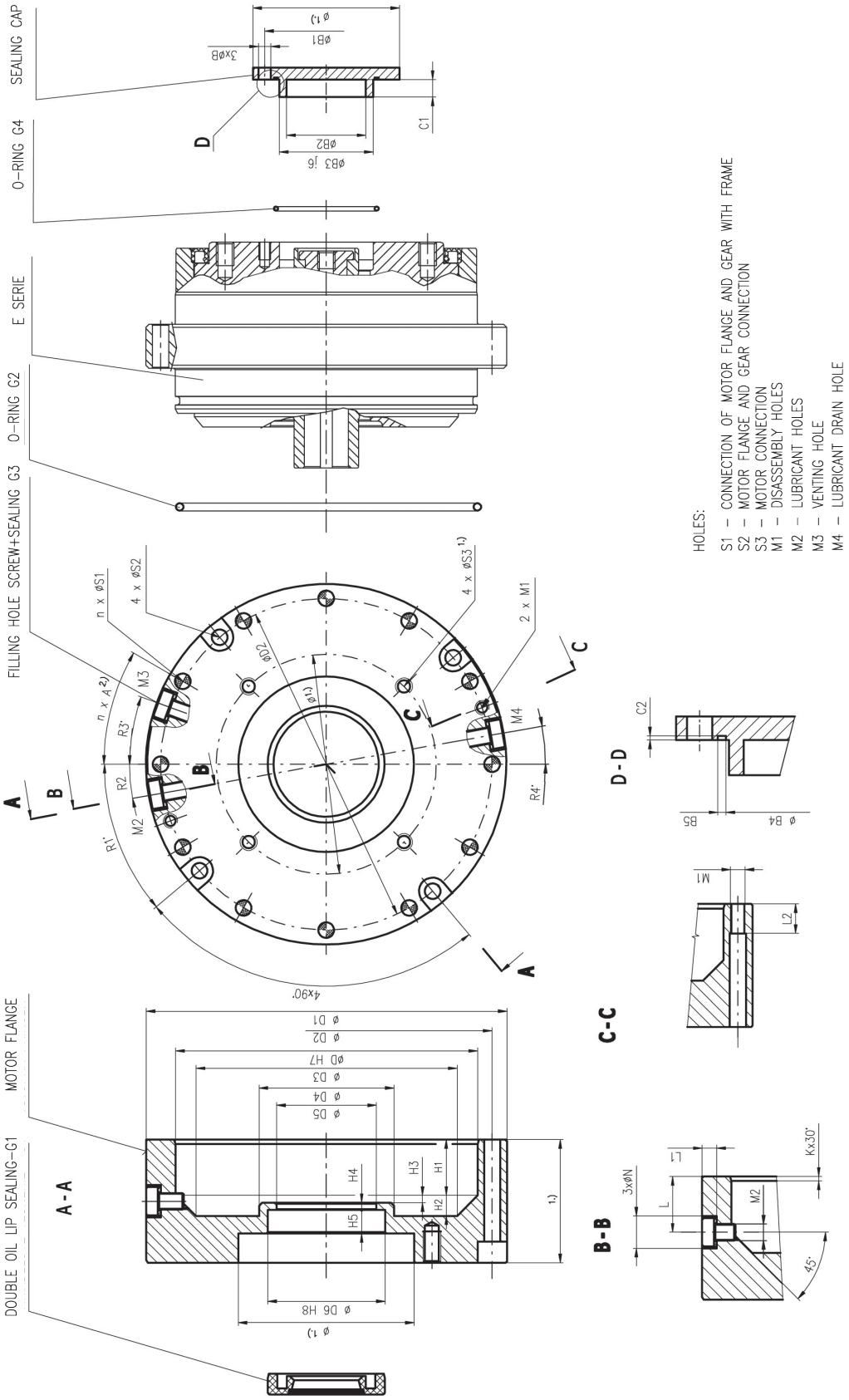

Dimensions and tolerances of the E series connecting components

SPINEA BY TIMKEN
Courtesy of Steven Engineering, Inc - (800) 258-9200 - sales@steveneng.com - www.stevenengineering.com

5.2.4 **E** series mounting tolerances

Requirements for circumferential and face runout in case of direct connection of the high precision reduction gear with servomotor through the shaft in accordance with DIN 42955R are specified in Fig. 5.2.4a. Tolerances are specified in Tab. 5.2.4

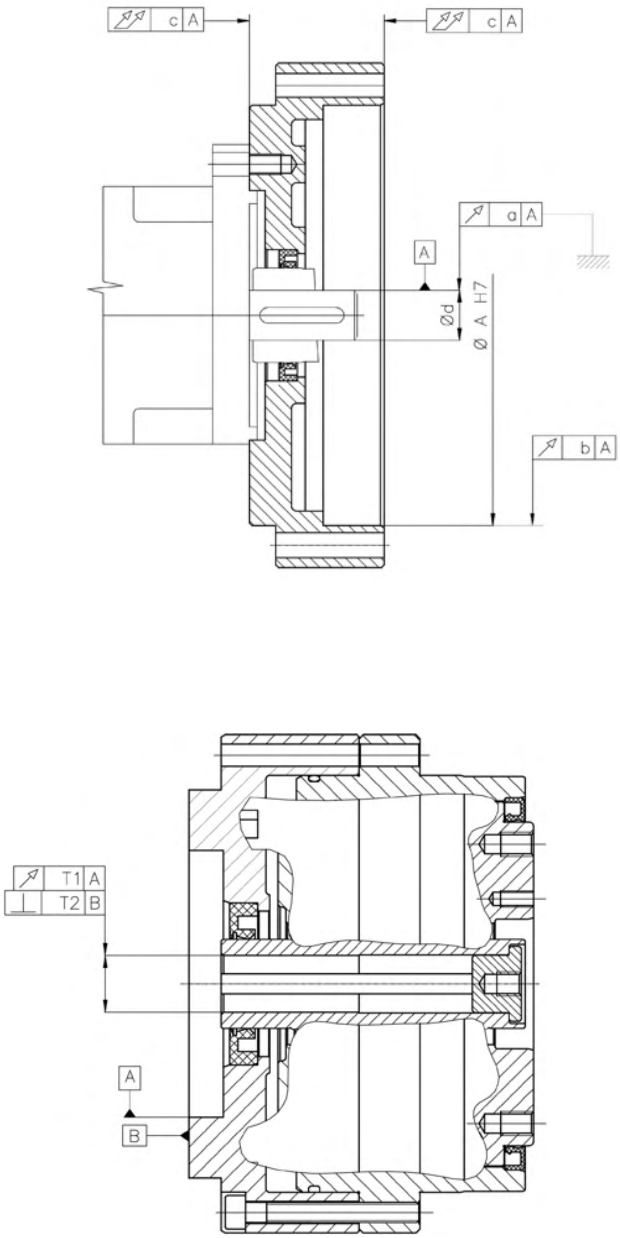

Fig. 5.2.4a: Geometric deviations for connection of the E series TwinSpin® high precision reduction gear flange or of the TwinSpin® E series reduction gear with a motor

SPINEA BY TIMKEN
Courtesy of Steven Engineering, Inc - (800) 258-9200 - sales@steveneng.com - www.stevenengineering.com

Tab. 5.2.4: Tolerances of circumferential and face runout in case of direct connection of TwinSpin® high precision reduction gears with servomotor according to DIN 42955 R [mm]

Type	a	b	c	T1	T2	U	T	Z	V
TS 070	0,015	0,04	0,038	0,05	0,05	0,010	0,007	0,020	0,025
TS 080	0,015	0,05	0,038	0,06	0,05	0,010	0,007	0,020	0,025
TS 110	0,018	0,05	0,044	0,07	0,06	0,010	0,008	0,025	0,025
TS 140	0,021	0,05	0,05	0,07	0,06	0,010	0,009	0,025	0,030
TS 170	0,021	0,05	0,05	0,07	0,06	0,015	0,010	0,025	0,030
TS 200	0,025	0,05	0,058	0,07	0,06	0,015	0,010	0,035	0,030
TS 220	0,025	0,063	0,058	0,08	0,06	0,015	0,013	0,030	0,035

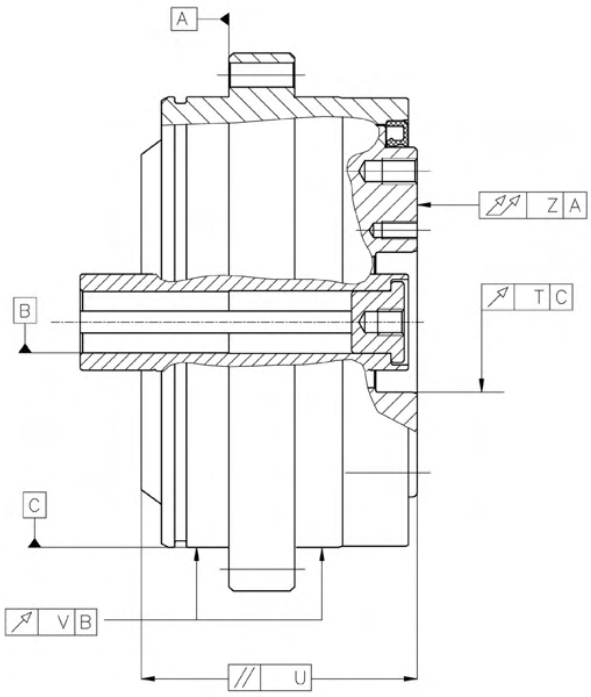

Fig. 5.2.4b: Tolerances of circumferential and face runout in case of direct connection of TwinSpin® high precision reduction gears with servomotor according to DIN 42955 R

SPINEA BY TIMKEN
Courtesy of Steven Engineering, Inc - (800) 258-9200 - sales@steveneng.com - www.stevenengineering.com

5.2.5 E series tightening torques of connecting bolts

Safe transmission of external loads applied on the TwinSpin® high precision reduction gear requires the use of connecting screws of at least 10.9 grade and degrease of the friction joints contact surfaces before installation. Tightening torques of the screws are shown in Tab. 5.2.5b.
Allowable torque transmitted through the connecting screws on the flange and case are shown in Tab. 5.2.5b.

Tab. 5.2.5a: Tightening torque of screws

Screw	Tightening torque [Nm]	Clamping force [N]	Screw material class specification
M3	1.9	3 100	ISO 898 T1 10.9 or 12.9
M4	4,3	5 300	
M5	8.4	8 800	
M6	14	12 400	
M8	35	22 750	
M10	70	36 200	
M12	122	52 900	
M16	300	100 000	
M18	455	120 000	

Tab. 5.2.5b: Allowable torque transmitted through connecting screws

	Output flange			Case		
Size	Number × screw	Pitch diameter [mm]	Transmitted torque [Nm]	Number × screw	Pitch diameter [mm]	Transmitted torque [Nm]
TS 070	5 × M6	40	186*	10 × M5	76	500
TS 070	5 × M6	40	254*	10 × M5	76	500
	with pin Ø6	40				
TS 080	8 × M5	46	242*	10 × M5	85	560
TS 110	14 × M6	69	890	14 × M5	113	1 040
TS 140	18 × M6	92	2 090	12 × M6	140	1 560
	8 × M6	74				
TS 170	18 × M8	110	4 470	14 × M8	175	4 180
	8 × M8	80				
TS 200	18 × M12	129	9 880	14 × M10	206	7 830
	8 × M6	91				
TS 220	20 × M10	140	7 600	14 × M10	220	8 350

* Safe transmission of torque requires glue to be applied on the friction surfaces (NICRO 20-10, NICRO 32-02; LOCTITE 603)

SPINEA BY TIMKEN
Courtesy of Steven Engineering, Inc - (800) 258-9200 - sales@steveneng.com - www.stevenengineering.com

5.3 H series installation examples

5.3.1 H series mounting examples

The H series is completely sealed and filled with grease for the lifetime. Fig. 5.3.1a, Fig. 5.3.1b and Fig. 5.3.1c show examples of connections with motors.
The through input shaft of the H series high precision reduction gear with an increased diameter allows to pass power supply or control cables through the reduction gear axis to the devices mounted behind the output flange. The H series reduction gear is most often used in combination with a pre-stage, which may comprise gears or toothed belt drives. A typical example of the H series reduction gear drive through a toothed belt is shown on Fig. 5.3.1a. The driven pulley is screwed onto the shaft of the reduction gear with tightening torque according to Tab. 5.3.4a and Tab. 5.3.4b.
The driving pulley with the motor must be shiftable to allow the belt tightening.
Fig. 5.3.1b shows the drive of the input shaft through gears. The gears are housed in a frame being a part of the reduction gear input flange.
Fig. 5.3.1c shows a toothed pulley mounted on the input flange by means of friction rings.

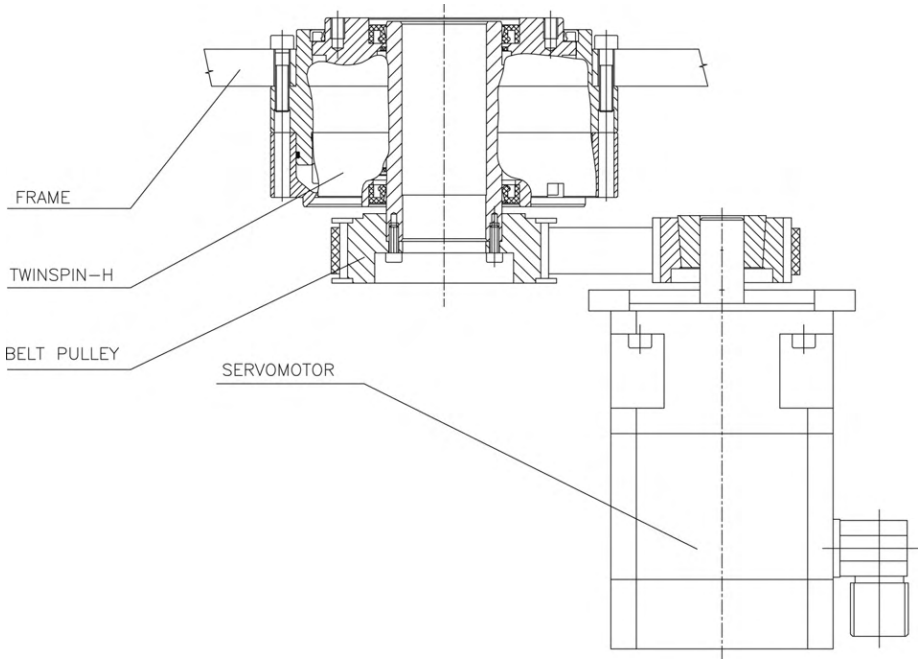

Fig. 5.3.1a: Connection of a toothed pulley with the reduction gear shaft by means of a screw connection

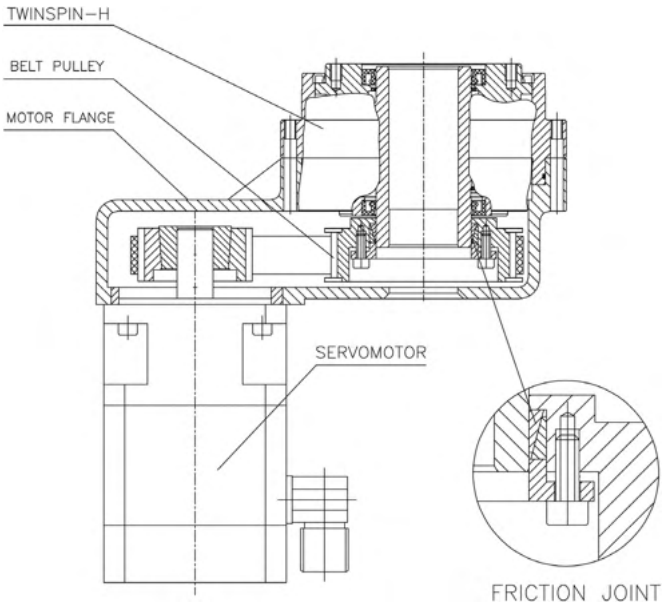

Fig. 5.3.1b: Connection of a toothed pulley with the reduction gear shaft by means of a friction connection

Courtesy of Steven Engineering, Inc - (800) 258-9200 - sales@steveneng.com - www.stevenengineering.com

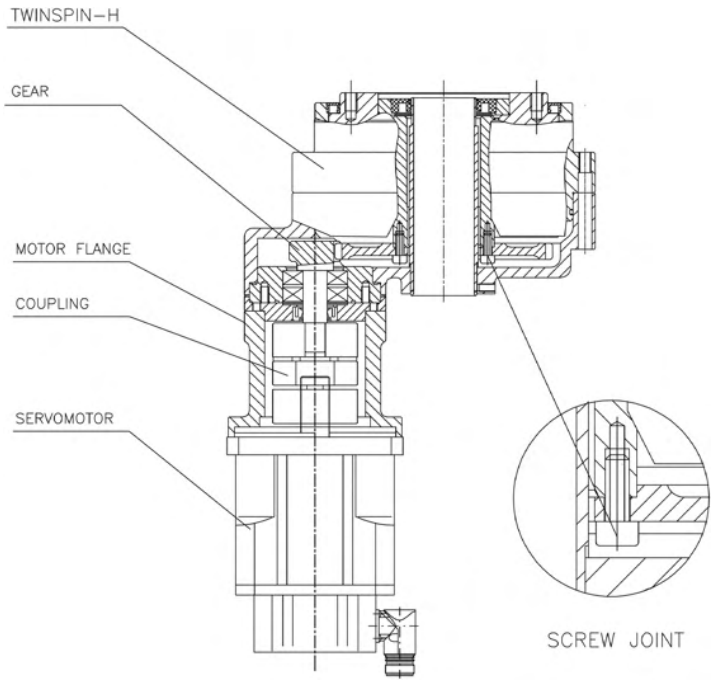

Fig. 5.3.1c: Connection of a gear wheel with the reduction gear shaft by means of a screw connection

5.3.2 H series installation procedure

Prior to the installation, wipe off the protective oil film from the reduction gear surface with a clean and dry cloth. Degrease the contact surfaces of the friction-type connections. TwinSpin® high precision reduction gears are not protected against corrosion. Please, contact the sales department or your local sales representative for further information.

5.3.3 H series mounting tolerances

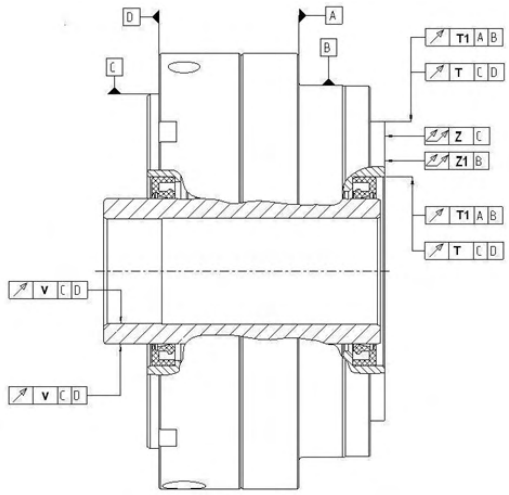

Fig. 5.3.3: Maximum geometric deviations for the H series reduction gear

Tab. 5.3.3a: Maximum geometric deviations for the H series reduction gear [mm]

	TS 140H	TS 170H	TS 200H	TS 220H
T	0,02	0,02	0,02	0,02
T1	0,013	0,015	0,015	0,015
Z	0,025	0,025	0,03	0,03
Z1	0,015	0,015	0,02	0,02
V	0,05	0,05	0,06	0,06

SPINEA BY TIMKEN
Courtesy of Steven Engineering, Inc - (800) 258-9200 - sales@steveneng.com - www.stevenengineering.com

5.3.4 H connecting screws tightening torques

Safe transmission of external loads applied to the TwinSpin® high precision reduction gear requires the use of connecting screws of at least 10.9 grade and degrease of the friction joints contact surfaces before the installation. Tightening torque of screws are shown in Tab. 5.3.4a. Allowable torque transmitted through connecting screws on the flange and case is shown in Tab. 5.3.4b.

Tab. 5.3.4a: Tightening torque of screws

Screw	Tightening torque [Nm]	Clamping force [N]	Screw material class specification
M3	1.9	3 100	ISO 898 T1 10.9 or 12.9
M4	4.3	5 300	
M5	8.4	8 800	
M6	14	12 400	
M8	35	22 750	
M10	70	36 200	
M12	122	52 900	
M16	300	100 000	
M18	455	120 000	

Tab. 5.3.4b: Allowable torque transmitted through connecting screws

	Output flange			Case		
Size	Number × screw	Pitch diameter [mm]	Transmitted torque [Nm]	Number × screw	Pitch diameter [mm]	Transmitted torque [Nm]
TS 070	5 × M6	40	186*	8 × M5	76	400
TS 070	5 × M6	40	254*	8 × M5	76	400
	with pin Ø6	40				
TS 140	16 × M6	92	1 400	12 × M6	140	1 560
TS 170	18 × M8	110	3 300	12 × M8	175	3 580
TS 200	18 × M12	131	6 400	12 × M10	206	6 700
TS220	20 × M10	140	7 600	12 × M10	220	7 100

* Safe transmission of torque requires glue application on the friction surfaces (NICRO 20-10, NICRO 32-02; LOCTITE 603)

Courtesy of Steven Engineering, Inc - (800) 258-9200 - sales@steveneng.com - www.stevenengineering.com

5.4 M series installation examples

In order to achieve maximum performance of the TwinSpin® high precision reduction gear, it is important to pay attention to the installation and accuracy of the assembly and lubrication. The M series high precision reduction gears are completely sealed. The modular design of the reduction gear allows the connection of different drive parts. Motor flanges and shaft couplings are required for this connection. We can design and supply such parts upon request together with a reduction gear.

ATTENTION

Handling with and assembling the reduction gear TS 050M, input shaft shall not be subject to axial and radial load so as roll bearing units are not damaged where the shaft is embedded in. Such damage, if occurs, is not subject to warranty. Eventual mounting compression/ tensile axial load applied on the shaft must be eliminated with the shaft face supporting on the oposite shaft side or against the axial force effect direction, in order to avoid the bearing units damage. Clause 3.12 page 104 contains limit values of operating load for M-series bearing reduction gear shaft.

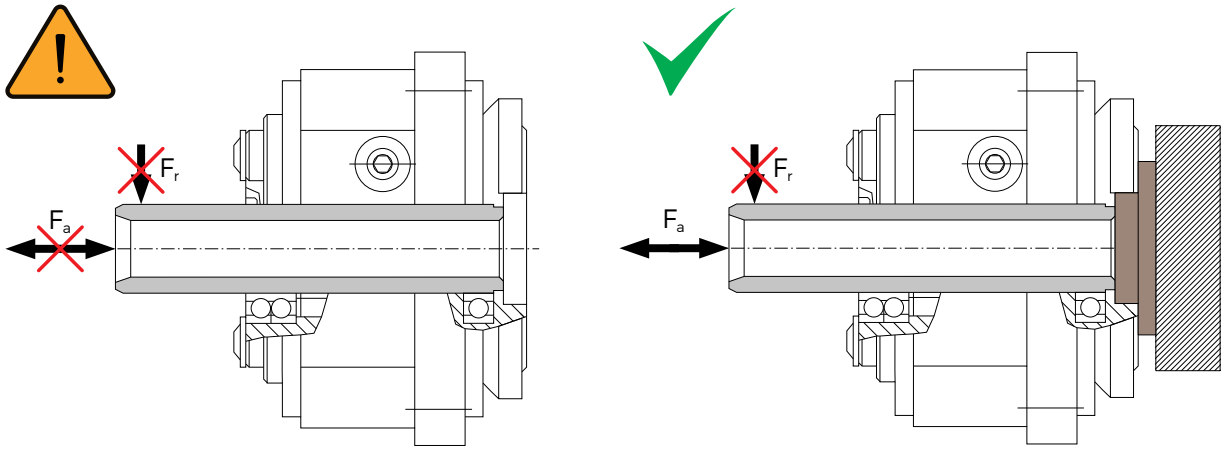

5.4.1 M series installation examples

Most common cases of connections between the M series TwinSpin® high precision reduction gear and a servomotor are shown on Fig. 5.4.1a, Fig. 5.4.1b, Fig. 5.4.1c, and 5.4.1d. Direct connection of the high precision reduction gear shaft with motor is through a keyway. This connection requires the same diameter of the motor shaft as the hole in the high precision reduction gear. In case of direct connection of the reduction gear with motor, all specified tolerances for the coupling flange must be met and only motors with shafts that meet the tolerances specified in the European DIN 42955 standard may be used. Our sales department will provide you with information on such standards or with technical assistance for your specific application.

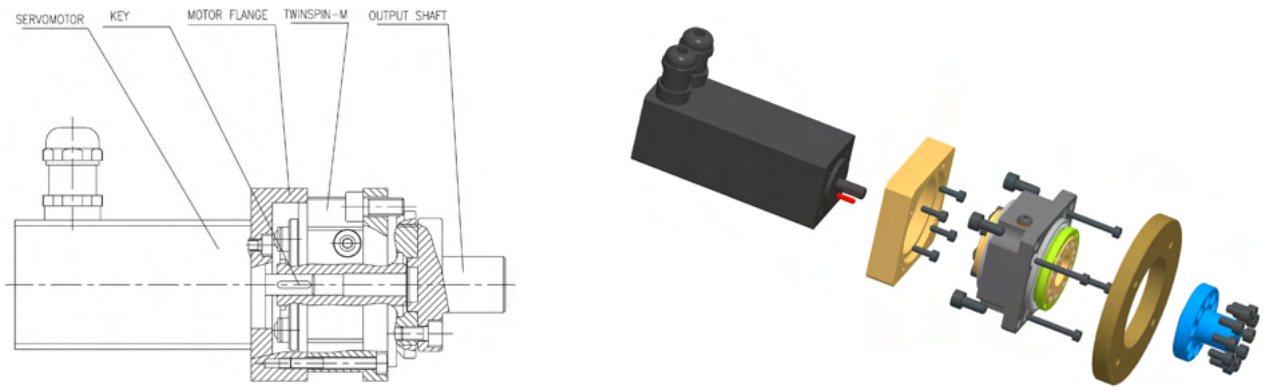

Fig. 5.4.1a: Shaft connection with a keyway

SPINEA BY TIMKEN
Courtesy of Steven Engineering, Inc - (800) 258-9200 - sales@steveneng.com - www.stevenengineering.com

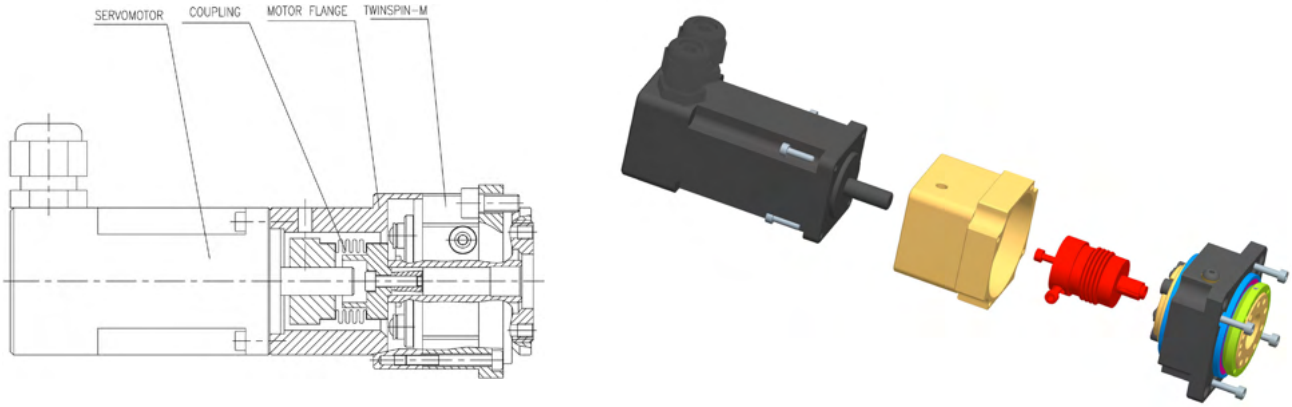

Fig. 5.4.1b: Shaft connection with flexible coupling

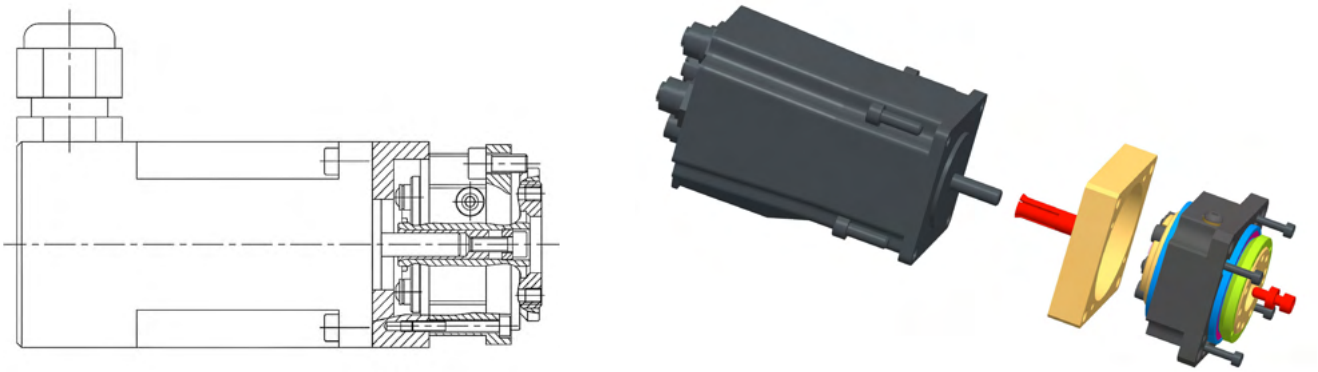

Fig. 5.4.1c: Shaft connection with a collet

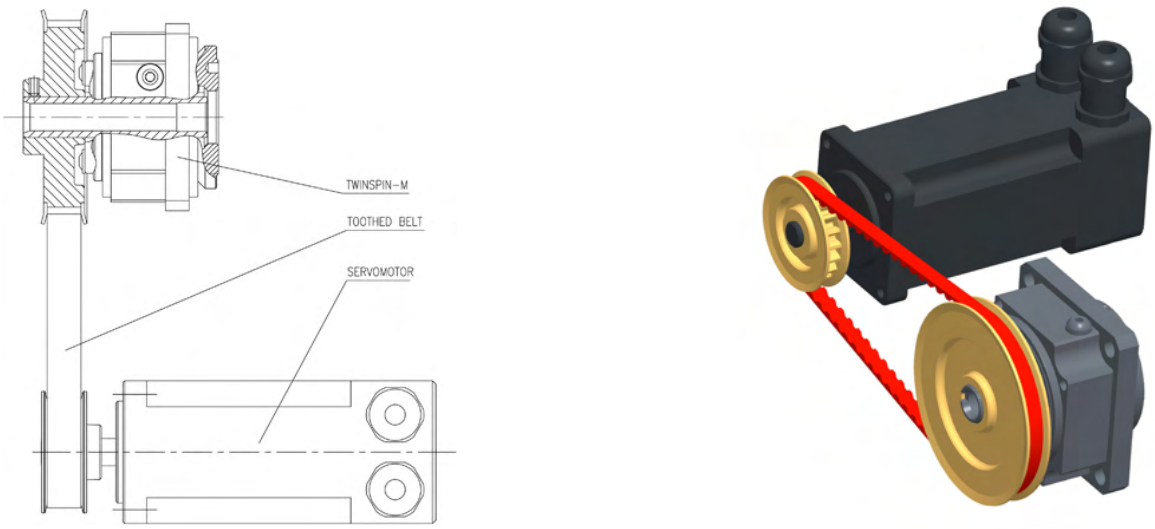

Fig. 5.4.1d: Example of the hollow-shaft version of the reduction gear use driven through a toothed belt

Courtesy of Steven Engineering, Inc - (800) 258-9200 - sales@steveneng.com - www.stevenengineering.com

5.4.2 M series installation procedure

A typical example of the assembly with TS 050 is shown on Fig. 5.4.2 Before the installation. it is desirable to wipe off the protective oil film from the reduction gear surface with a clean and dry cloth. Contact surfaces of friction joints must be degreased prior to installation. When cleaning. make sure that the degreaser does not get into the reduction gear. During the installation. proceed with the following steps: At first. fasten a coupling to the reduction gear. then fasten the connecting motor flange to which the motor will be mounted and finally bolt the whole assembly to the frame.

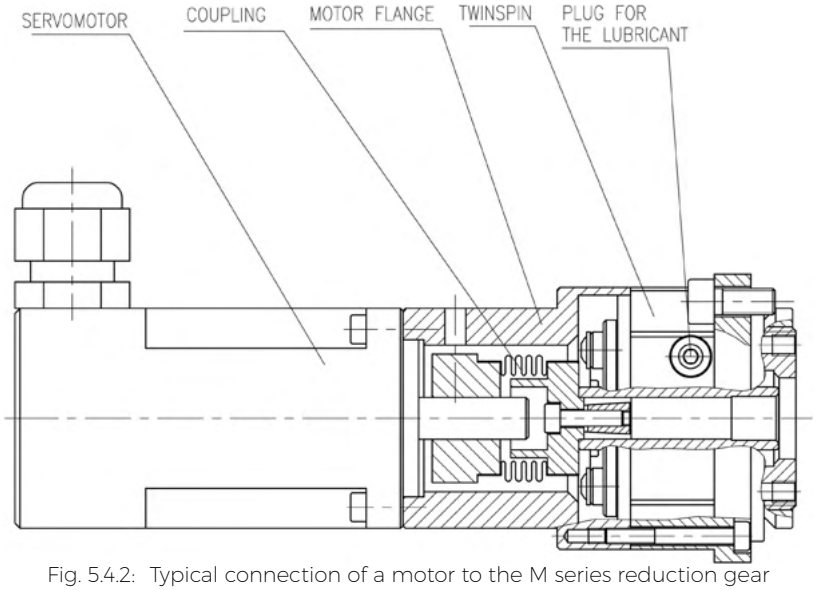

Fig. 5.4.2: Typical connection of a motor to the M series reduction gear

5.4.3 M series connecting parts tolerances

Tab. 5.4.3: Maximum geometric deviations for the M series reduction gear [mm]	
Tolerance	TS 050
a	0.02
b	0.04
c	0.038
d	6 j6
A	47 H7

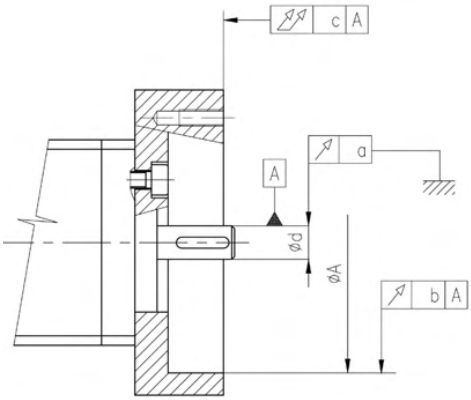

Fig. 5.4.3: Tolerances of M series connecting parts

5.4.4 M series connecting parts geometrical deviations

Tab. 5.4.4: M series reduction gear [mm]	
Tolerance	TS 050
T	0.01
Z	0.02
ØD H7	6.0
ØC H7	15.5
ØA h6	47.0

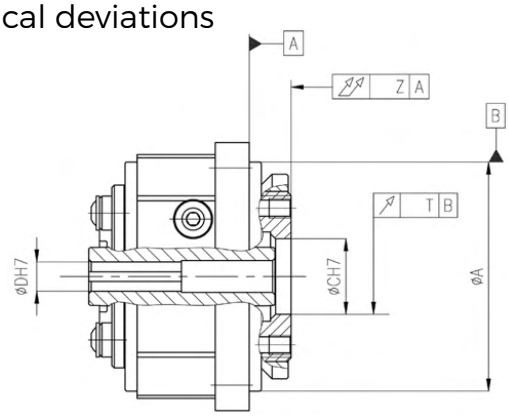

Fig. 5.4.4: Radial and axial runout of the output flange

SPINEA BY TIMKEN
Courtesy of Steven Engineering, Inc - (800) 258-9200 - sales@steveneng.com - www.stevenengineering.com

5.4.5 M series connecting screws tightening torque

For the safe transmission of external loads applied to the TwinSpin® high precision reduction gear requires the use of connecting screws of at least 10.9 grade and degrease of the
friction joints contact surfaces before the installation. Tightening torques of screws are shown in Tab. 5.4.5a. Allowable torque transmitted through connecting screws on the flange and case is shown in Tab. 5.4.5b

Tab. 5.4.5a: Tightening torques of screws

Screw	Tightening torque [Nm]	Clamping force [N]	Screw material class specification
M3	1.9	3 100	ISO 898 T1 10.9 or 12.9
M4	4.3	5 300	
M5	8.4	8 800	
M6	14	12 400	
M8	35	22 750	

Tab. 5.4.5b: Allowable torque transmitted through connecting screws

	Output flange			Case		
Size	Number x screw	Pitch diameter [mm]	Transmitted torque [Nm]	Number x screw	Pitch diameter [mm]	Transmitted torque [Nm]
TS 050	10 × M4	28	110	4 × M5	63	165

Courtesy of Steven Engineering, Inc - (800) 258-9200 - sales@steveneng.com - www.stevenengineering.com

5.5 Lubrication, cooling, preheating

The TwinSpin® reduction gear is lubricated usually with Castrol TRIBOL GR 100-0 PD or TRIBOL GR TT 1 PD grease. Alternatively, Castrol OPTIGEAR 150 oil may be used. More information is available on www.castrol.com. It is forbidden to mix the used reduction gear lubricant with other lubricant types. The interval of lubricant change highly depends on individual operating conditions.
Grease and oil quantity for individual TwinSpin® reduction gears is specified in Tab. 5.5.a. These quantities, however, do not include the space between the reduction gear and the connected parts. If no rotary shaft seal is used, the user must fill it with lubricant. The interval of lubricant change inside the reduction gear depends mainly on actual operating conditions and duty cycle.
High temperatures, high speed and loading will reduce the lubricant service life. In many cases re-lubrication will not be necessary because of sufficient lubricant supply in the reduction gear.. Recommended interval for lubricant change is 20 000 operating hours.

T series - is not a completely sealed series of high precision reduction gears, however, this series is normally filled with grease Castrol TRIBOL GR 100-0 PD or TRIBOL GR TT 1 PD. Recommended amount of grease for each size of T series reduction gears is shown in Tab. 5.5.a. These figures, however, do not include the space between the TwinSpin® reduction gear and sealing flanges. The user shall provide for complete sealing and supply of lubricant to the space. It is recommended to fill up to 70 - 80 % of the free sealed volume. Upon the user request, SPINEA® can offer a complete sealed and grease-filled solution.

E series - is not a completely sealed series of high precision reduction gears, normally filled with oil Castrol OPTIGEAR or Castrol TRIBOL GR 100-0 PD or TRIBOL GR. The user shall supply grease into the reduction gear after its complete sealing. It is recommended to fill up to 70 - 80 % of the free sealed volume.

H series - is a completely sealed series of high precision reduction gears, normally filled with grease CASTROL TRIBOL GR TT 1 PD.

M series - is a completely sealed series of high precision reduction gears, normally filled with grease CASTROL TRIBOL GR TT 1 PD.

Tab. 5.5.a: Recommended lubricant quantity for the filling of the T, E, H, M series [cm³]

Size	Series	Volume of the lubricant
TS 050	M	3
TS 060	T	5
TS 070	T, E, H	10
TS 080	T, E	15
TS 110	T, E, H	30
TS 140	T, E	70
TS 140	H	75
TS 170	T, E	120
TS 170	H	270
TS 200	T, E	180
TS 200	H	345
TS 220	E	200
TS 220	H	350
TS 240	T	300
TS 300	T	470

Note:
*The specified values represent 80 % filling of the internal volume of the T series TwinSpin® high precision reduction gears. In case of reduction gear accessories manufactured by the user, it is necessary to increase these values by the amount that represents 80 % of the space between the reduction gear and the accessories. Lubrication levels in the horizontal and vertical positions are on Tab. 5.5.a.
**If other types of seals instead of rotary shaft seals are used on the reduction gear, or in case of desired leakage of grease from the reduction gear, the customer should determine the greasing intervals at his own risk or consult it with the supplier regarding confirmation of the warranty period.

When the reduction gear is in operation, the temperature of the lubricant should not exceed the maximum temperature defined by the lubricant manufacturer. Otherwise it is necessary to take into consideration the possible loss of the used lubricant properties.

Classification of occurring leakages

For monitoring production parts according to DIN 3761, the leakage classes according to table 1 are to be used. Deviating test conditions are to be agreed upon. In addition, the so-called zero-leakage with test-rig tests of 240 h with 12 specimens can be arranged for release for construction, or for critical installation locations with special safety requirements.

Courtesy of Steven Engineering, Inc - (800) 258-9200 - sales@steveneng.com - www.stevenengineering.com

Tab. 5.5.b: Recommended lubricant quantities for the filling of the G series [cm³]

Size	Volume of the lubricant
TS 075	10
TS 085	20
TS 095	30
TS 115	40
TS 125	40
TS 135	65
TS 155	130
TS 185	230
TS 225	300

Tab. 5.5.c: Range of use and lifetime of lubricants

Lubricant	Type	Range of use
Castrol TRIBOL GR 100-0 PD	Grease	-35 °C to +140 °C
Castrol TRIBOL GR TT 1 PD	Grease	-60 °C to +120 °C
Castrol OPTIGEAR 150	Oil	-10 °C to +90 °C
FUCHS CASSIDA FLUID GL 150	Oil - food grade	-45 °C to +140 °C
Klübersynth GE 44-51	Grease	-40 °C to +120 °C
Lubrilog PE 1612	Grease	-30 °C to +140 °C

When these limits are exceeded, it is necessary to provide cooling or pre-heating of the reduction gears. In such cases please contact our sales department.

Attention: Temperatures stated in Tab. 5.5.c correspond to those stated by the manufacturer for determination of the lubricant lifetime in certain extreme conditions of its use, lubrication intervals or its exchange. These temperatures are not identical with the temperatures inside or on the surface of the reduction gear. Since the thermal conditions inside the reduction gear and on its surface are less extreme in standard operation than the limit temperatures for the lubricant, the lifetime of the lubricant filling is higher than stated in the table.

Cooling

Cooling of the reduction gears is in most cases not necessary. There are some cases when temperature on the reduction gear surface becomes a limiting factor for a given duty cycle and relative ambient temperature. The reduction gear warming-up in extreme duty cycles should not exceed the ambient temperature of 20 °C - 25 °C by more than 40°C.

Cooling is usually used in the following cases:
a) special regulations applicable to explosive environments where low temperature is required
b) ambient temperature higher than 40 °C
c) heat transmission between the electric motor and the reduction gear is too high

For purpose of proper reduction gear function assurance (lubricant, sealing, pre-stress degree and material dilatation) during the guaranteed lifetime, limit temperature expresses the limit temperature of the reduction gear, measured on its surface.

Tab. 5.5.d: Limit temperature of the reduction gear surface (measured on the gear surface)

Lubricant	Reduction gear limit temperature	
	TS 050 - TS 140	TS 170 - TS 300
Castrol TRIBOL GR 100-0 PD	65 °C	70 °C
Castrol TRIBOL GR TT 1 PD	65 °C	70 °C
Castrol OPTIGEAR 150	65 °C	70 °C
FUCHS CASSIDA FLUID GL 150	65 °C	70 °C
Klübersynth GE 44-51	65 °C	70 °C
Lubrilog sPE 1612	65 °C	70 °C

The stated temperatures represent a condition when the reduction gear is not overloaded by speed with regard to lost motion. If the temperature is higher despite static (increasing of the surface for heat dissipation) or dynamic (forced) cooling, it is necessary to reduce the speed or to use a reduction gear with higher LM (lost motion).
In such cases please contact our sales department for technical support.

Courtesy of Steven Engineering, Inc - (800) 258-9200 - sales@steveneng.com - www.stevenengineering.com

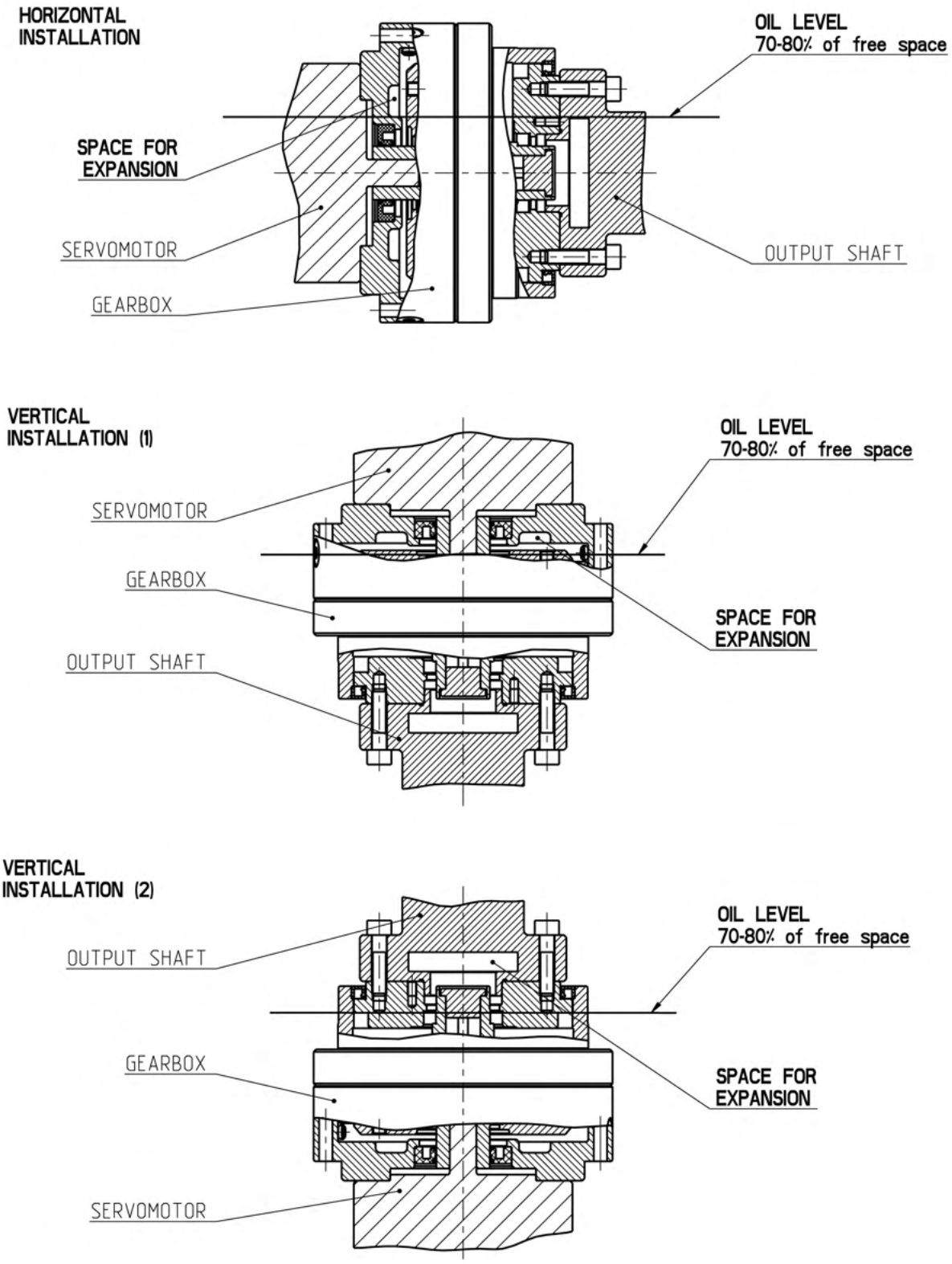

Fig. 5.5a: Lubricant levels in horizontal and vertical positions

SPINEA BY TIMKEN
Courtesy of Steven Engineering, Inc - (800) 258-9200 - sales@steveneng.com - www.stevenengineering.com

Classification of occurring leakages

For monitoring production parts according to DIN 3761, the leakage classes according to table Tab. 5.5.e, are to be used. Deviating test conditions are to be agreed upon. In addition, the so-called zero-leakage with test-rig tests of 240 h with 12 specimens can be arranged for release for construction, or for critical installation locations with special safety requirements. These zero-leakages can be subdivided according to the following criteria:

In the course of normal operating conditions, film of moisture at the sealing edge only.
Film of moisture over the sealing edge area but not passing beyond the back face, no formation of droplets.
Film of moisture passing beyond the back face and/or formation of droplets, but no dripping occurs.

In tests on assemblies and vehicles, zero-leakage defines that state of the radial shaft seal during static and dynamic conditions where the sealed medium does not leak beyond the outer side of the radial shaft seal.

Tab. 5.5.e: Leakage classes

Leakage class	Max. permissible leakage per radial shaft seal	Max. permissible leakage per 12 radial shaft seals
1	1 g	3 g
2	2 g	6 g
3	3 g	12 g

Pre-heating

Pre-heating is only used in very rare cases when the reduction gear is run with a very low duty factor at extreme ambient temperature variations or at very low ambient temperatures.

The reduction gear should normally be pre-heated at temperatures below -10 °C. This is not necessary if the temperature is constant and high enough, so are the speed values as well as the values of the torque to be transmitted, but in any case a special run-in and pre-heating cycle is needed. At such temperatures it is necessary to count with higher start-up torque and thus with more generous sizing of the drive motor.

In such cases please contact our sales department for technical support.

5.6 Thermal conditions

The TwinSpin® reduction gears are designed for ambient temperature range of -10 °C to +40 °C. Applications in other thermal conditions should be consulted (etc. -40 °C to +70 °C) with the sales department or your local sales representative.

5.7 Motor flanges

Most motor adaptor flanges are available upon request. Please contact the sales department or your local sales representative for further assistance.

Courtesy of Steven Engineering, Inc - (800) 258-9200 - sales@steveneng.com - www.stevenengineering.com

6. General information

6.1 Maintenance

The reduction gear does not require any special maintenance. During its installation please observe the respective dimensional and positional tolerances of the centering diameters (Chapter 5.3). The reduction gear is a high-precision product, therefore it requires careful manipulation, installation, and dismounting.
Any tampering with the reduction gear (disassembly, assembly) constitutes immediate loss of warranty. If a reduction gear fails due to incorrect manufacturing or a material defect, please inform the manufacturer, who will carry out professional repair or replacement.

6.2 Delivery conditions

The reduction gear is delivered completely assembled, without fixing screws, filled with grease, and in a protective package. Not all series are fully sealed as a standard. Each reduction gear is identified with a type label, containing the following data:

- manufacturer
- product type and size
- reduction ratio
- model
- serial number

6.3 Transport and storage

The reduction gears should be transported in enclosed transport vehicles, or in containers secured against movement or overturning. Transport mode should follow mutual agreement between the customer and the supplier. In addition, the product must be protected against the particles, aggressive vapours, dust, and mechanical damage. The manufacturer recommends storing TwinSpin® reduction gears in the original transport package.
Standard packaging in the original package ensures corrosion protection for the period of 6 months during storage in enclosed rooms with the ambient temperature within 5 °C - 25 °C, and the relative humidity up to 60 %. After 6 months it is necessary to apply preserving treatment of the reduction gear.

6.4 Warranty

The warranty is specified in the General Delivery Terms of SPINEA, s.r.o.. For more information visit our website: www.spinea.com

6.5 Final statement

Any design changes, modifications and improvements, aimed at increasing the technological level of the reduction gear, which, however, do not change the main technical parameters, installation and connection dimensions, may be performed by the manufacturer without prior consent of the customer. Any design changes and/or modifications affecting the critical properties and parameters of the reduction gear are subject to approval procedure.

6.6 Cautions concerning the application of the TwinSpin® high precision reduction gear

If the product end user works in the military field or if the product is to be used for manufacturing of weapons, the product may be subject to trade controls and export regulations. Before exporting of the product , please check the export and trade control terms and conditions and take the required actions.

- In case of potential direct endangering of human life by the product defect or malfunction if used as a part of the devices that may cause damage to human health (nuclear, space, healthcare facilities, various security systems, etc.), regular checks are essential. In such case please contact our sales agent or our nearest business office.

- Although this product has been manufactured under strict quality control, it is essential to adopt appropriate safety measures if its intended use is in the machines that, in the event of malfunction, may seriously endanger human life or damage equipment.

- If this product is to be used in a special environment (clean rooms, food industry, etc.), please contact our sales agent or our nearest business office.

For more information visit our website: www.spinea.com

Courtesy of Steven Engineering, Inc - (800) 258-9200 - sales@steveneng.com - www.stevenengineering.com

6.7 FAQ

01. Q: Are reduction ratios between 20-30 possible with the TwinSpin® reduction gear?
A: Transmission ratios less then 30:1 can be discussed if requested. Ratios that are not offered as a standard bear higher risk of transmission inaccuracies. Consult technical and delivery conditions with the sales department or our local sales representative.

02. Q: What is the noise level of TwinSpin® during its operation?
A: TwinSpin® runs extremely smoothly. Reference noise measurements of the reduction gear mounted upon a servomotor are available on request.

03. Q: Do you have any information about the temperature increase during continuous running of TwinSpin® with rated load?
A: Reduction gears are preferably intended for duty cycles S3-S8, i.e. output speed in applications is variable in both directions. The S1 duty cycle should be consulted with the manufacturer, but it should not exceed the ambient temperature of 25 °C by 40 °C.

04. Q: Does the input shaft have an axial play for the compensation of heat increase from the connected servomotor?
A: There is an axial clearance at the input shaft of the reduction gear that allows heat dilatation. Please pay attention to the adjustment of clearance when interfacing the reduction gear with servomotor (see Chapter 5).

05. Q: Why are there grease and oil lubrication options?
A: Grease is used in the standard applications. Oil is only used in in special application requests demanding very low viscous friction, in high-speed applications, at special conditions and users´ preferences (e.g. extremely cold environment for radar applications).

06. Q: Is it possible to use the TwinSpin® reduction gear independently of the installation position?
A: The installation position may be vertical or horizontal. Upon request, the manufacturer will provide engineering support, including assembly drawings.

07. Q: What does „nominal lifetime L_{10}" mean?
A: The nominal lifetime L_{10} means the time in hours when up to 10 % of a batch fails due to material fatigue.

08. Q: Which duty cycle (load) determines the rated torque and the corresponding nominal life?
A: The rated torque is calculated value of the loading constant torque at the nominal constant input speed of the input shaft for the duty cycle when the calculated nominal lifetime is L_{10} = 6,000 hours and the duty factor ED = 1 (100 %).

09. Q: Do you provide interface flanges and motor shaft connections for different servomotors?
A: Yes. We are able to provide you with necessary technical support. Regarding the flange interfacing, we have a database of typical connecting couplings and interface flanges drawings. We are able to prepare the assembly and detail drawings for customers, if they specify the type and size of motor. Upon request we are also able to manufacture the motor flange and coupling.

10. Q: The pair of flanges rotates at a reduced speed with respect to the case. Is there any radial-axial clearance on the output bearing with respect to the reduction gear case?
A: There are two options. The first one is no clearance and prestressed in both directions as necessary. The second one is axial and radial clearance of up to 10 microns.

11. Q: Why is TwinSpin® characterized as a zero-backlash reduction gear?
A: TwinSpin® is a zero backlash reduction gear because there is no reversal clearance between the trochoid teeth of the gear wheels and the cylindrical rollers of the hollow gear wheels in the reduction gear case. This is reached by high-precision manufacturing of components and careful pairing during the assembly.

12. Q: Is TwinSpin® self-locking?
A: No. Thanks to very good efficiency there is no self-locking effect. For back-driving torque values see Chapter 3.13.

13. Q: Which part of TwinSpin® do you use to calculate the lifetime, i.e. which part of the reduction gear fails first?
A: The nominal lifetime is limited by the roller bearing between the eccentric shaft and the gearwheels.

Courtesy of Steven Engineering, Inc - (800) 258-9200 - sales@steveneng.com - www.stevenengineering.com

7. DriveSpin® - General information

The DriveSpin® (DS) is a combination of the TwinSpin® high precision reduction gear, featuring excellent mechanical properties, and the AC servomotor in a compact unit. Excellent parameters are guaranteed by more than 20-year experience in the manufacture of reduction gears by SPINEA, s.r.o.

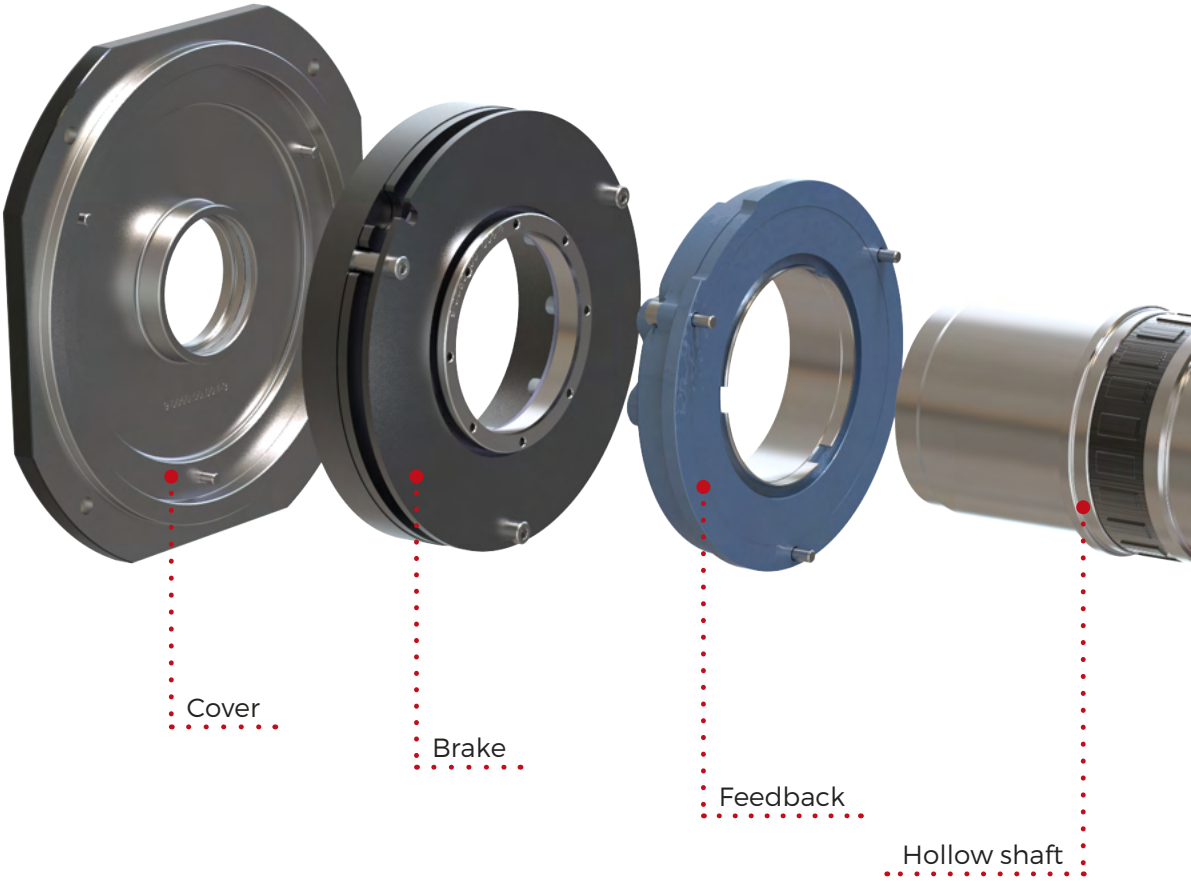

Fig. 7.a: DriveSpin® actuators components

Courtesy of Steven Engineering, Inc - (800) 258-9200 - sales@steveneng.com - www.stevenengineering.com

The actuators features:

- high precision and accuracy
- high tilting and torsional stiffness
- low vibrations
- compact dimensions
- low weight
- long service life
- easy installation

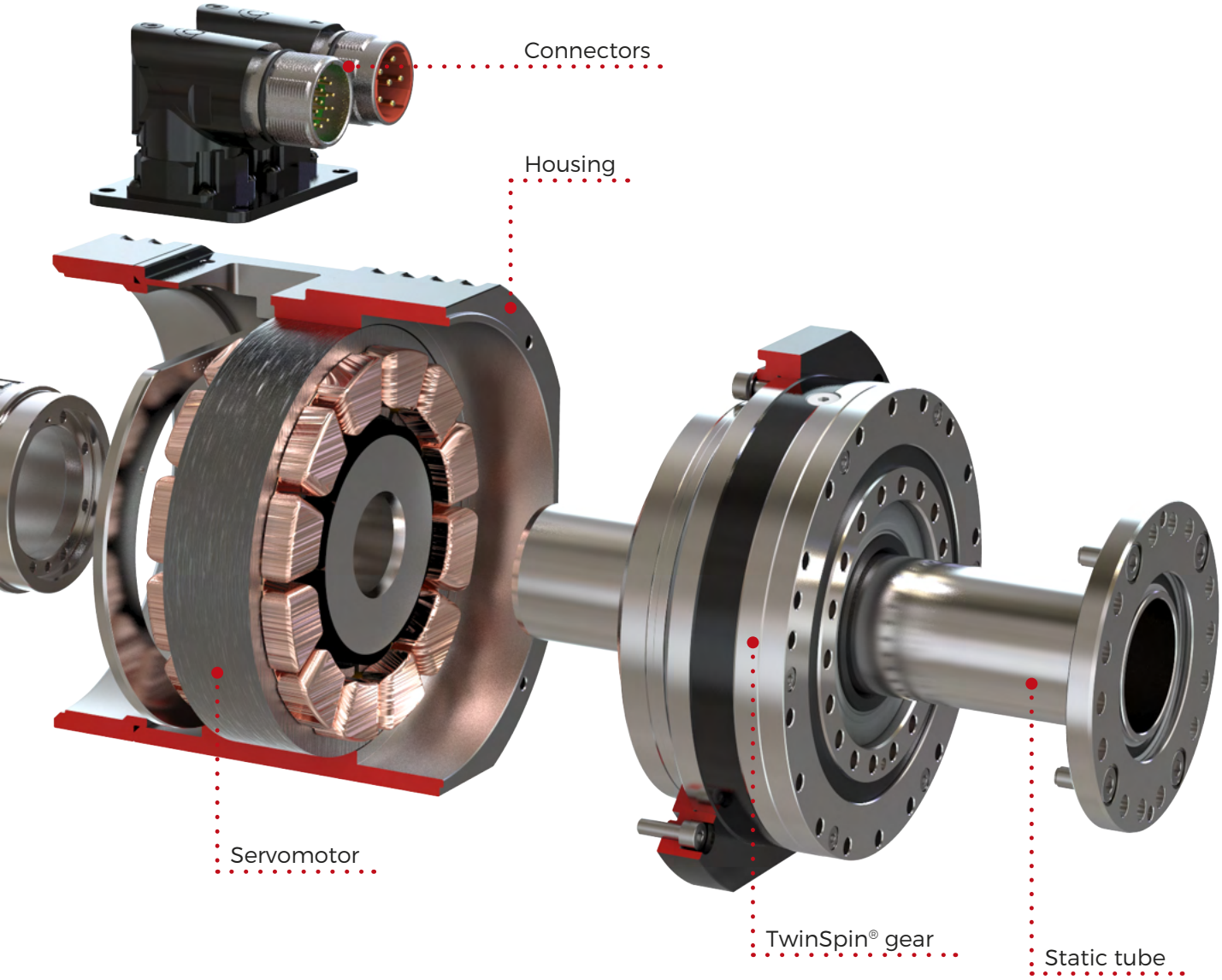

Courtesy of Steven Engineering, Inc - (800) 258-9200 - sales@steveneng.com - www.stevenengineering.com

Advantages

Actuators are sophisticated mechatronic drive nodes (devices) that combine a high-precision cycloid gearbox (bearing reducer), a servomotor, and feedback sensors. DriveSpin® electric actuators meet the most demanding customer requirements in all areas of industry. With optimum price/performance ratio, they reliably provide parameters such as high accuracy, high tilt, and torsional stiffness, low weight, compact design, low vibration, IP degree of protection, or a wide range of suitable technical solutions.

Uniquely balanced design

The DriveSpin® electric actuators feature a unique integration of high-load-capacity reduction gear containing a unique reduction mechanism with an AC servomotor that meets even the most demanding requirements for dynamic performance.

Unique precision and accuracy

The DriveSpin® electric actuator, using a patented proprietary design of the bearing reduction gear, represents the most precise and accurate solution in its product category.

High moment capacity

The DriveSpin® actuators are outstanding for their high moment capacity, implemented in a zero-backlash design with an excellent power-to-size ratio and load capacity of the radial-axial bearings integrated in the DriveSpin® actuator.

Feedback sensor variability

The DriveSpin® electric actuators can be supplied with a wide range of feedback systems, such as EnDat®, HIPERFACE®, and Resolver.

Customized solution

Our technical and development department is prepared to adjust the DriveSpin® according to customer specifications in terms of connectivity, mechanical design, motor characteristics, feedback systems as well as demands on the high IP protection class requirements.

Technical support

Our team of specialists is available to you to solve any issues. The use of first-class materials and the very process of the manufacturing of high precision DriveSpin® electric actuators are guaranteed by ISO 9000 certificates.

Courtesy of Steven Engineering, Inc - (800) 258-9200 - sales@steveneng.com - www.stevenengineering.com

DS SERIES

DSH SERIES

DSM SERIES

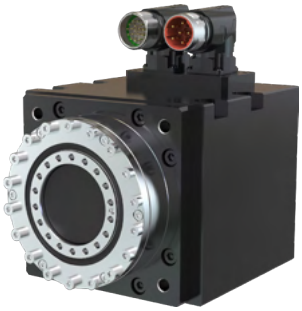

DSF SERIES

8. DriveSpin® series

Actuators known under the trademark DriveSpin® are most commonly used in automation, robotics, automotive industry as well as in general mechanical engineering, as part of various industrial equipment used for positioning in a variety of mechanical nodes.
The product portfolio is characterized by four basic type designs:

DS – Standard actuator

DSH – Hollow shaft actuator (with hole)

DSM – Actuator in modular design

DSF – Flat, the shortest possible solution (reduced)

Product portfolio of DS/DSH/DSM/DSF actuators

Type	Size									
	050	070	085	095	110	115	125	140	155	170
DS (STANDARD)	✓	✓	×	✓	✓	✓	×	✓	✓	×
DSM (MODULAR)	✓	✓	×	✓	✓	×	×	×	×	×
DSH (HOLLOW SHAFT)	✓	✓	✓	×	✓	✓	✓	×	✓	✓
DSF (FLAT)	✓	✓	×	✓	×	×	×	×	×	×

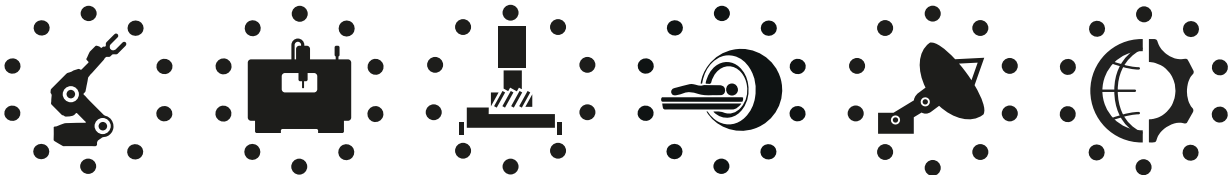

SPINEA BY TIMKEN
Courtesy of Steven Engineering, Inc - (800) 258-9200 - sales@steveneng.com - www.stevenengineering.com

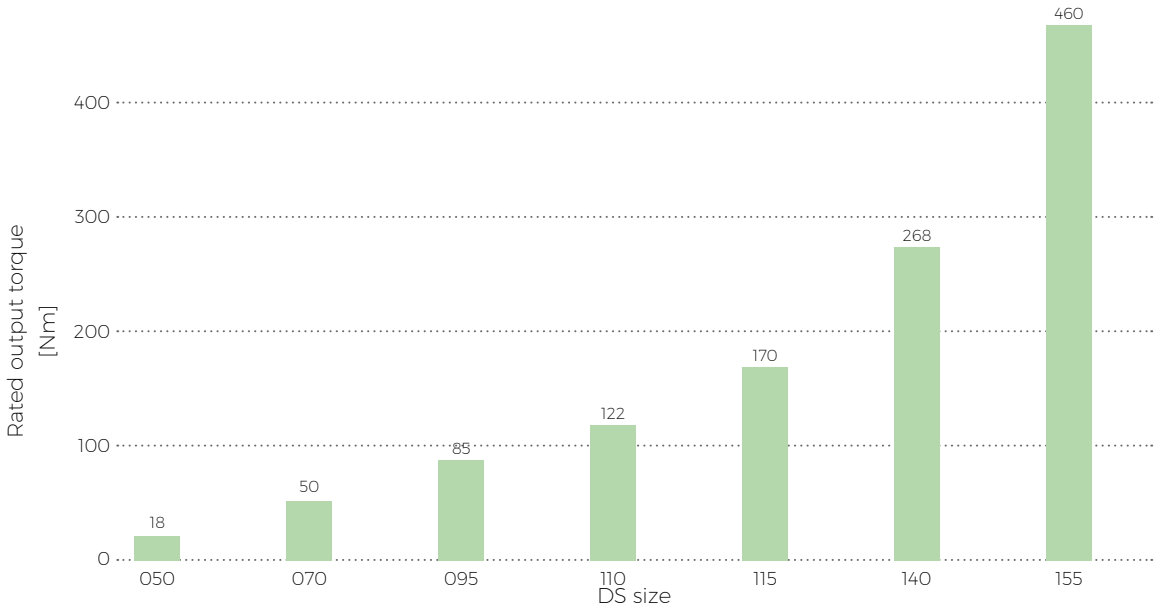

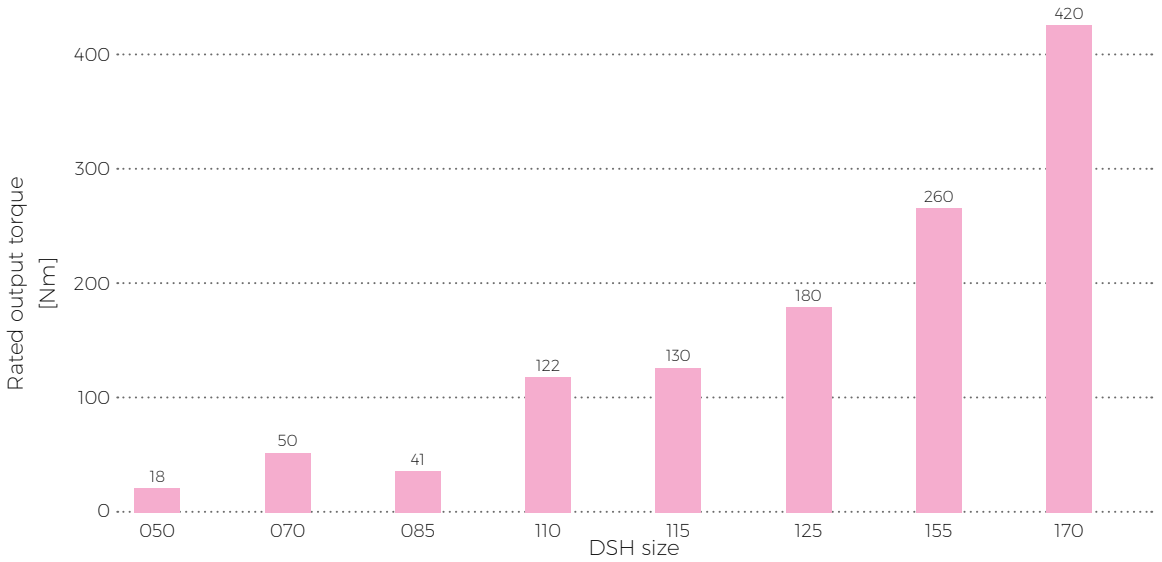

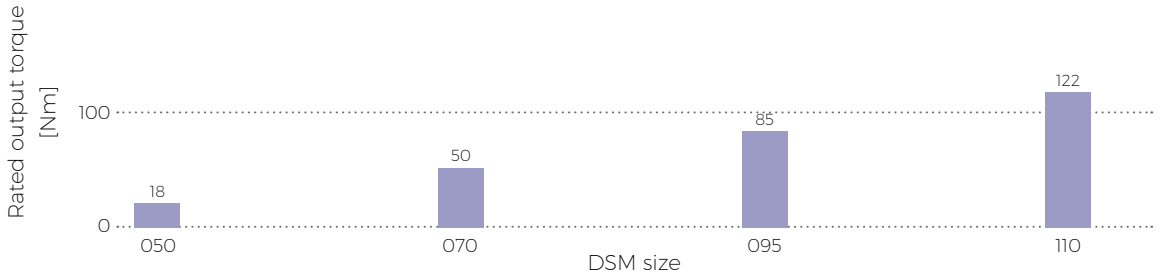

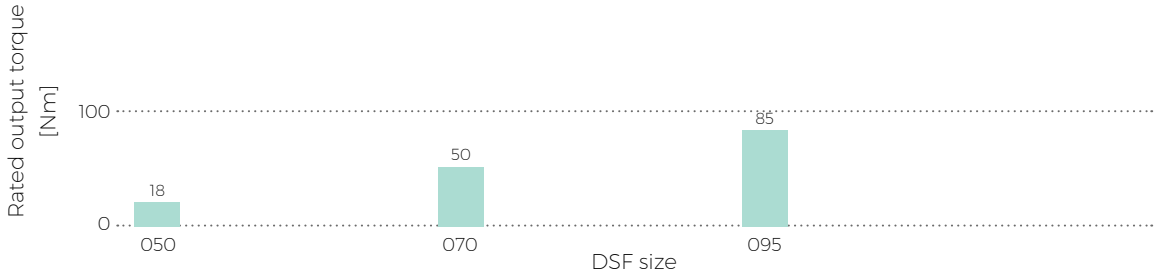

Courtesy of Steven Engineering, Inc - (800) 258-9200 - sales@steveneng.com - www.stevenengineering.com

Ordering code

All SPINEA® actuators are determined by unique ordering code. This code specifies all necessary parameters of the actuator, like e.g. actuator size, transmission rate, voltage ratings, feedback type, etc. If you are unable to specify certain part of the ordering code, please provide a letter in the sense of the general code. This is also the case if you need an advice regarding special requirements of your application. In both cases, our technical support will contact you to reach the optimal solution.
We are ready to produce separate cabling for your application requirements. Possible configurations are based on Tab. 8.6: Ordering code for Cable

Note:
When selecting the position sensor of the DS xxx-i-abcde-fg-xy, you can choose amongst the basic feedback types. When creating a business-technical offer, the feedback type will be replaced with a more specific position sensor number.

Ordering code example

DSH 115-103-4500B0-AH-00

00 : Special modification - **Standard connector**

A– : Wiring diagram - **Power connection**
–H : Wiring diagram - **Signal connection**

4––––– : DC bus voltage - **560 V**
–5––––– : Temperature sensor - **PT 1000**
––0––– : Brake - **No**
–––0B– : Feedback type - **Absolute Singleturn Encoder Hiperface**
––––––0 : Type of electrical connection - **Straight connectors**

103: Reduction ratio - **103**

115: Actuator size - **115**

DSH: **DriveSpin® Hollow shaft**

SPINEA BY TIMKEN
Courtesy of Steven Engineering, Inc - (800) 258-9200 - sales@steveneng.com - www.stevenengineering.com

Tab. 8.a: DriveSpin® ordering specifications

DS_	- 070	- 057	- 3	1	B	0A	4	- A	J	- 00
Name	Size	i	a	b	c	d	e	f	g	x y
Type	Actuator size	Ratio	DC bus voltage	Temperature sensor	Brake	Feedback type	Type of electrical connection	Wiring diagram		Special modification
								Power	Signal	
DS standard DSH Hollow shaft DSM modular DSF flat	050	063	1: 24 VDC 3: 320 VDC 4: 560 VDC 5: 48 VDC S: Special upon request	1: PTC 111-K13 5: PT 1000 S: Special upon request	0: No B: Yes	0A Resolver 0B Absolute Singleturn Encoder Hiperface 0C Absolute Multiturn Encoder Hiperface 0D Absolute Singleturn Encoder EnDat 0E Absolute Multiturn Encoder EnDat 0F Absolute Singleturn Encoder EnDat + sin/cos 0G Absolute Multiturn Encoder EnDat + sin/cos 0H Incremental sin/cos Encoder + sin/cos Commutation 0J Incremental A/B/I Encoder + Block Commutation 0K: Absolute Singleturn Encoder Hiperface DSL 0L: Absolute Multiturn Encoder Hiperface DSL 0M: Absolute Singleturn Encoder BiSS 0N: Absolute Multiturn Encoder BiSS 0P: Absolute Singleturn Encoder DRIVE-CLiQ 0Q: Absolute Multiturn Encoder DRIVE-CLiQ 0R: Absolute Multiturn Fanuc 0S: Absolute Singleturn Fanuc	0: Straight connectors 1: Connector on terminal cable directed upward [7] 2: Hybrid straight connector 3: Hybrid angled rotable connector 4: Angled rotable connectors 5: Terminal cable directed upward [7] 6: Y-tec angular connector, rotable 7: Terminal cable directed forward [7] 8: Terminal cable directed backward [7] B: Connector on terminal cable directed forward [7] C: Connector on terminal cable directed backward [7]	For more information see page 226 - 231		Terminal cable length 00 Standard connector 10 Standard cable length L=1m xy Custom design Cable lengths and other modifications. For more information contact manufacturer.
	070	057, 075								
	085 [2]	047, 085								
	095 [5]	073, 095								
	110	067, 089, 119								
	115 [3]	055, 103								
	125 [2]	049, 099								
	140 [1]	069, 115								
	155 [3]	063, 109, 133								
	170 [3]	069, 125								

[1] only DS
[2] only DSH
[3] only DS, DSH
[4] only DS, DSH, DSM
[5] only DS, DSM, DSF
[7] The standard length (L=1m)

Courtesy of Steven Engineering, Inc - (800) 258-9200 - sales@steveneng.com - www.stevenengineering.com

Courtesy of Steven Engineering, Inc - (800) 258-9200 - sales@steveneng.com - www.stevenengineering.com

DriveSpin®

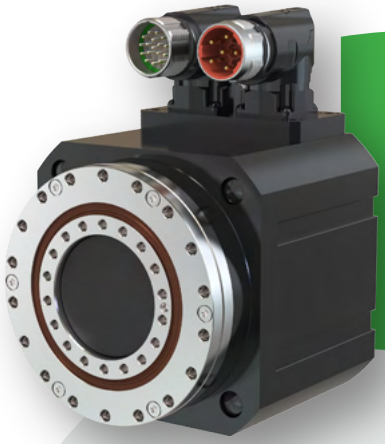

DS SERIES

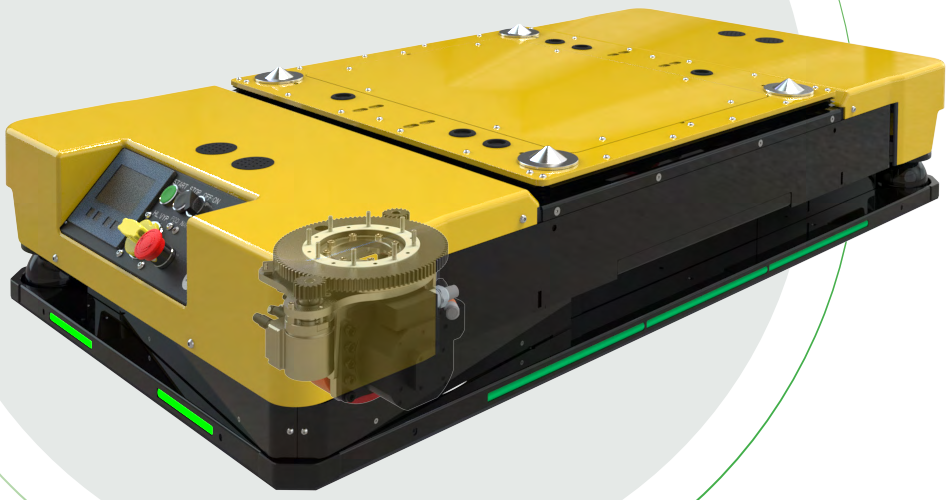

STANDARD

DriveSpin® **DS** SERIES IS EXCELLENT
IN BOTH AGV / AMR UNITS
AND MANY OTHERS

Courtesy of Steven Engineering, Inc - (800) 258-9200 - sales@steveneng.com - www.stevenengineering.com

8.1 DS series

Advantages

- **low lost motion**
- **low moment of inertia**
- **high reduction ratio**
- **high kinematic accuracy**
- **high moment overload capacity**
- **high capacity of the integrated radial-axial output bearings**
- **high dynamic performance**

The **Drive**Spin® **DS** electric rotary actuators, as the basic type of actuators, provide rotary motion and transfer output torque with high radial-axial load capacity, and are the most accurate and precise solution in their category. The DS actuators are characterized by high dynamics, high flexible drive solution, guaranteed by an AC servomotor, and high robustness and overload capacity of TwinSpin® reduction gear. DriveSpin® high variability of voltage, brake feedback and electrical connections will satisfly customer requirements in many cases. Rated output torque range of the DS is from 18 Nm to 460 Nm.

SPINEA BY TIMKEN
Courtesy of Steven Engineering, Inc - (800) 258-9200 - sales@steveneng.com - www.stevenengineering.com

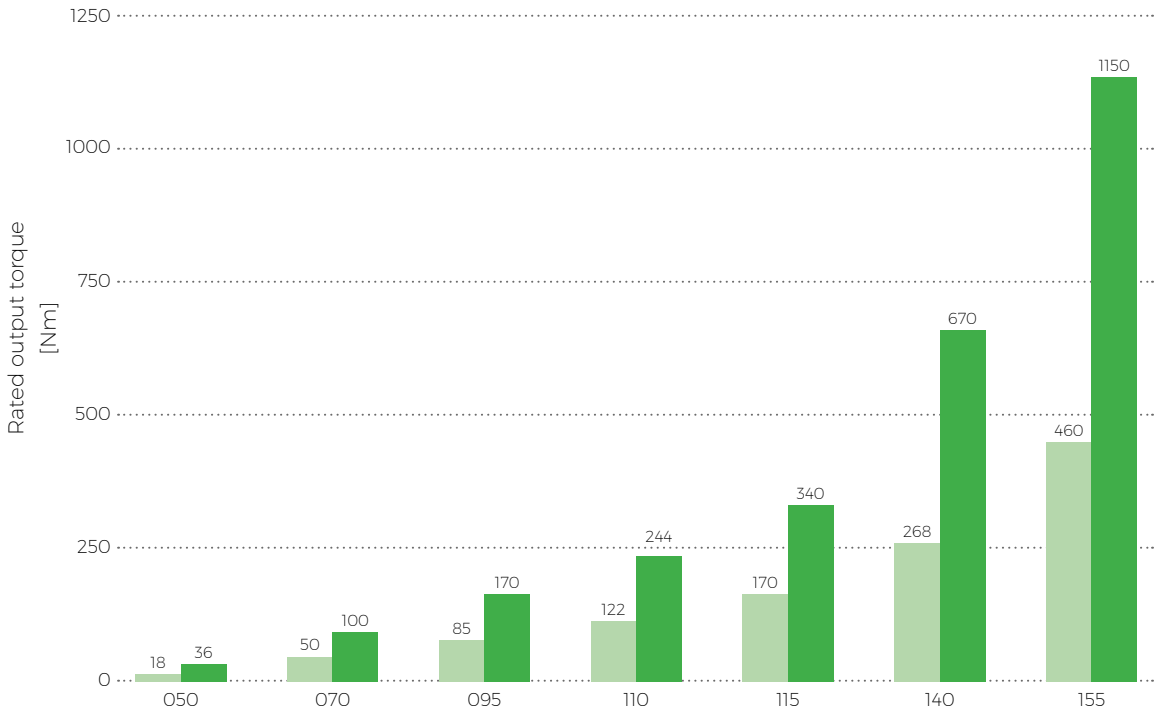

Tab. 8.1.a: Rated output torque

Size		050	070	095	110	115	140	155
Rated output torque	T_R [Nm]	18	50	85	122	170	268	460
Acceleration/ braking output torque	T_{acc} [Nm]	36	100	170	244	340	670	1150

Courtesy of Steven Engineering, Inc - (800) 258-9200 - sales@steveneng.com - www.stevenengineering.com

DS 050 - i - abcde-fg-xy

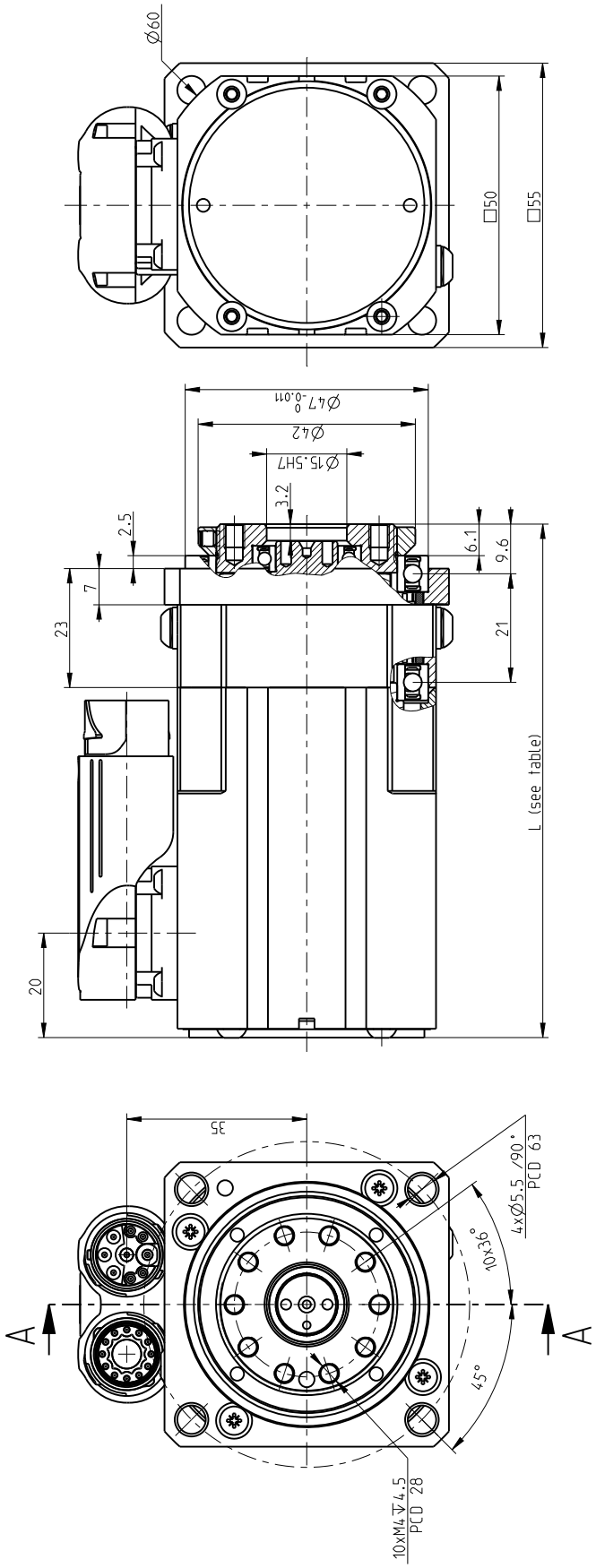

Size	Feedback type (d)	Without brake Dimension L ± 0.5 [mm]	Without brake Weight m [kg] *	With brake Dimension L ± 0.5 [mm]	With brake Weight m [kg] *
DS 050	OA	99	0.9	135	1.4
	OB,OC	107	1.2	138	1.4
	OD,DE	106	1.2	133	1.3
	OG	130	1.2	-	-
	OK,OL	144	1.2	155	1.4

DS 050 – i – abcde-fg-xy

SPINEA BY TIMKEN

Courtesy of Steven Engineering, Inc - (800) 258-9200 - sales@steveneng.com - www.stevenengineering.com

DS 070 - i - abcde-fg-xy

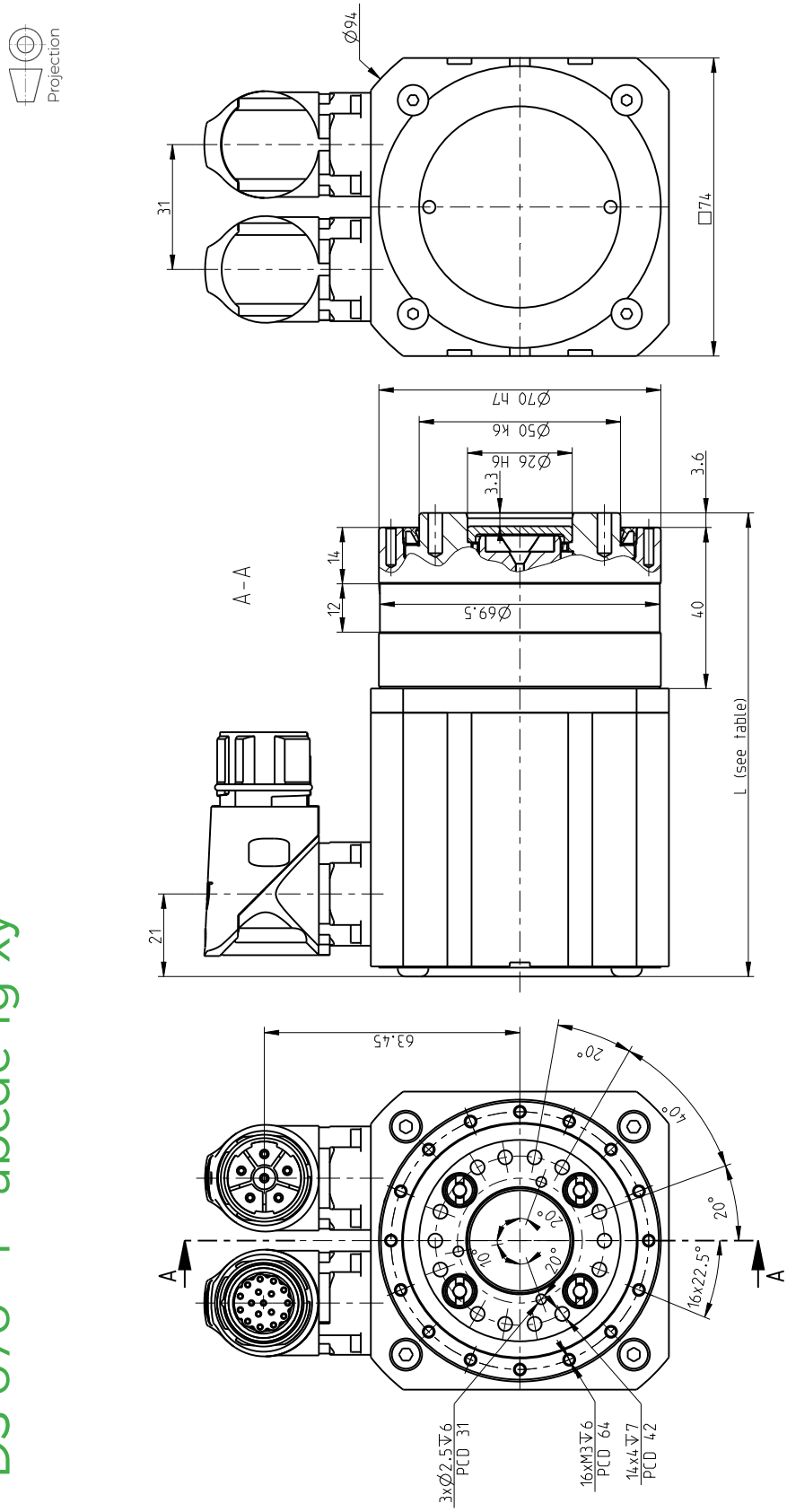

Size	Feedback type (d)	Without brake		With brake	
		Dimension L ± 0.5 [mm]	Weight m [kg] *	Dimension L ± 0.5 [mm]	Weight m [kg] *
DS 070	OA	115	2.3	194	3.4
	OB,OC	137	2.4	178	3.4
	OD,OE	148	2.6	195	3.5
	OH	148	2.6	195	3.5
	OP,OQ	-	-	137	2.4

DS 070 - i - abcde-fg-xy

Courtesy of Steven Engineering, Inc - (800) 258-9200 - sales@steveneng.com - www.stevenengineering.com

DS 095 - i - abcde-fg-xy

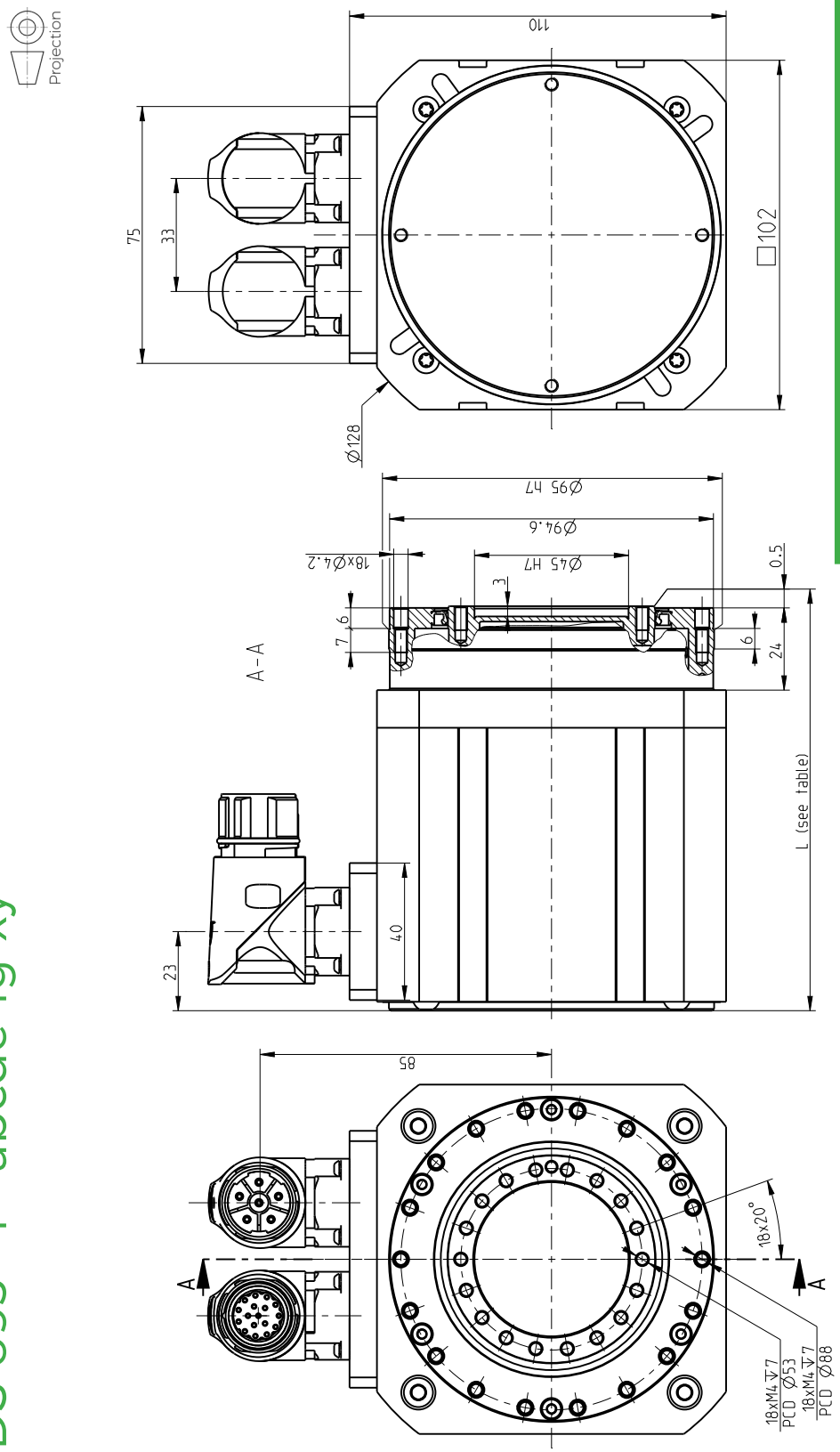

Size	Feedback type (d)	Without brake		With brake	
		Dimension L ± 0.5 [mm]	Weight m [kg] *	Dimension L ± 0.5 [mm]	Weight m [kg] *
DS 095	OA	118	4.9	138	5.8
	OH	146	5.4	161	6.2
	OB,OC	139	5.2	149	5.9
	OD,OE	127	5.0	141	5.8
	OG,OH,OF	146	5.4	161	6.2
	OD,OE	127	5.0	141	5.8
	OP,OQ	139	5.2	149	5.9
	OK,OL	139	5.2	149	5.9

DS 095 – i – abcde-fg-xy

SPINEA BY TIMKEN

Courtesy of Steven Engineering, Inc - (800) 258-9200 - sales@steveneng.com - www.stevenengineering.com

DS 110 - i - abcde-fg-xy

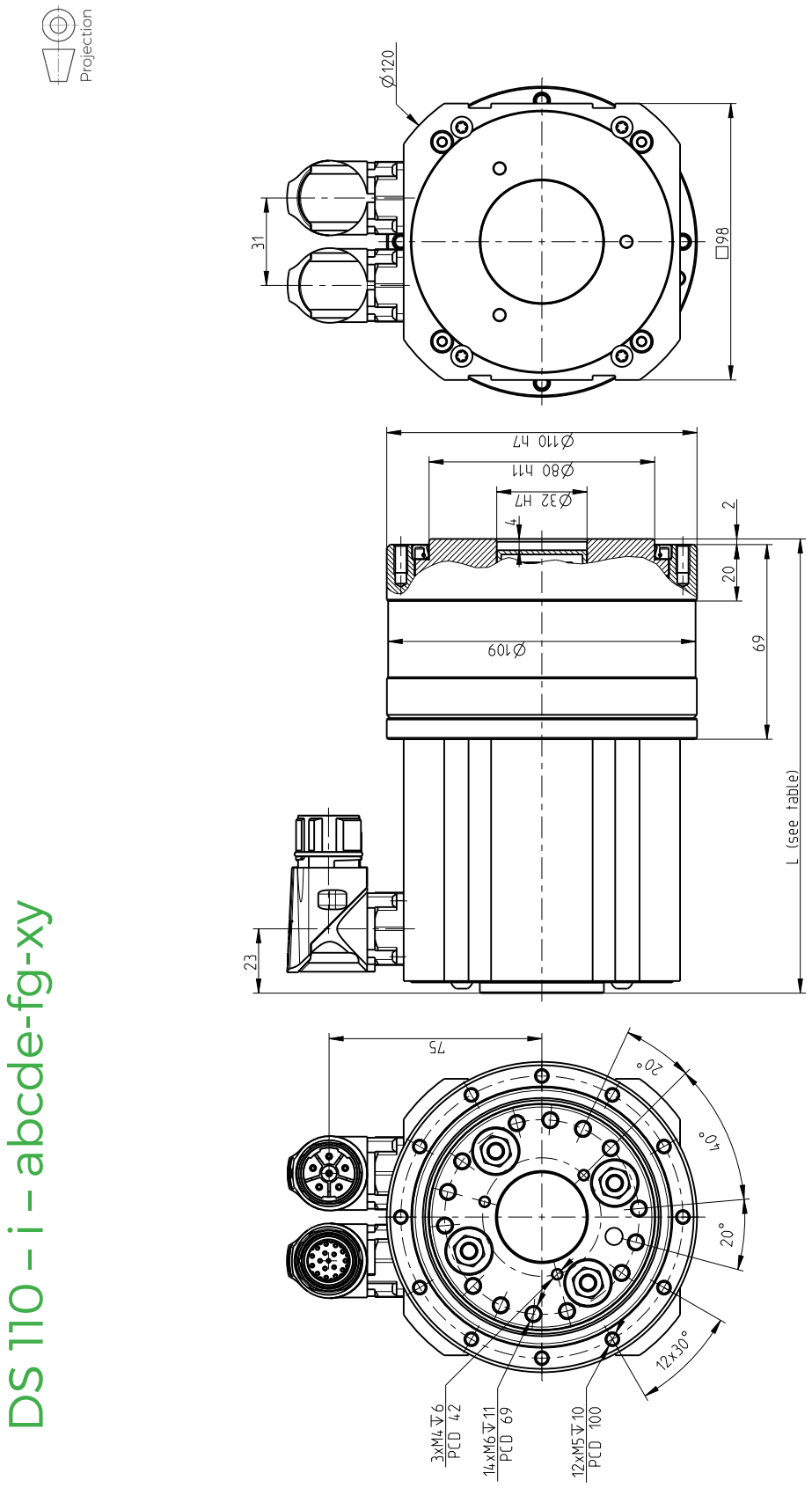

DS 110 - i - abcde-fg-xy

Size	Feedback type (d)	Without brake		With brake	
		Dimension L ± 0,5 [mm]	Weight m [kg] *	Dimension L ± 0,5 [mm]	Weight m [kg] *
DS 110	OA	161	8.2	213	9.1
	OB,OC	193	8.8	245	9.7
	OD,OE	202	8.6	242	9.6
	OH	202	8.6	242	9.6

DS SERIES

Courtesy of Steven Engineering, Inc - (800) 258-9200 - sales@steveneng.com - www.stevenengineering.com

DS 115 - i - abcde-fg-xy

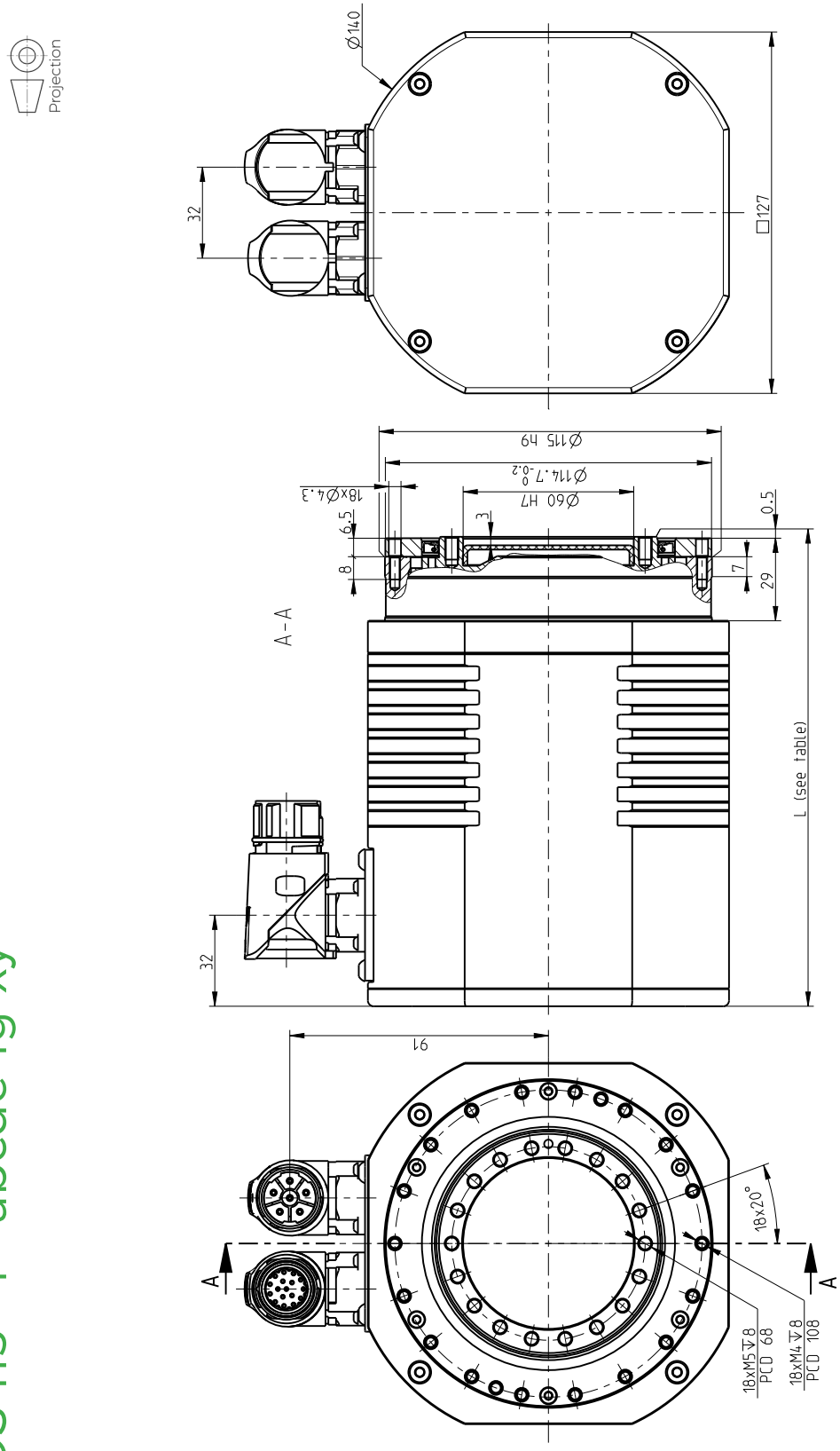

Size	Feedback type (d)	Without brake Dimension L ± 0,5 [mm]	Without brake Weight m [kg] *	With brake Dimension L ± 0,5 [mm]	With brake Weight m [kg] *
DS 115	OA	165	8.6	165	9.0
	OB,OC	165	8.6	165	9.0
	OD,OE	165	8.6	165	9.0
	OH	175	8.6	175	9.0
	OJ	165	8.6	165	9.0
	OK,OL	165	8.6	165	9.0
	ON	165	8.6	165	9.0

DS 115 – i – abcde-fg-xy

SPINEA BY TIMKEN

Courtesy of Steven Engineering, Inc - (800) 258-9200 - sales@steveneng.com - www.stevenengineering.com

DS 140 - i - abcde-fg-xy

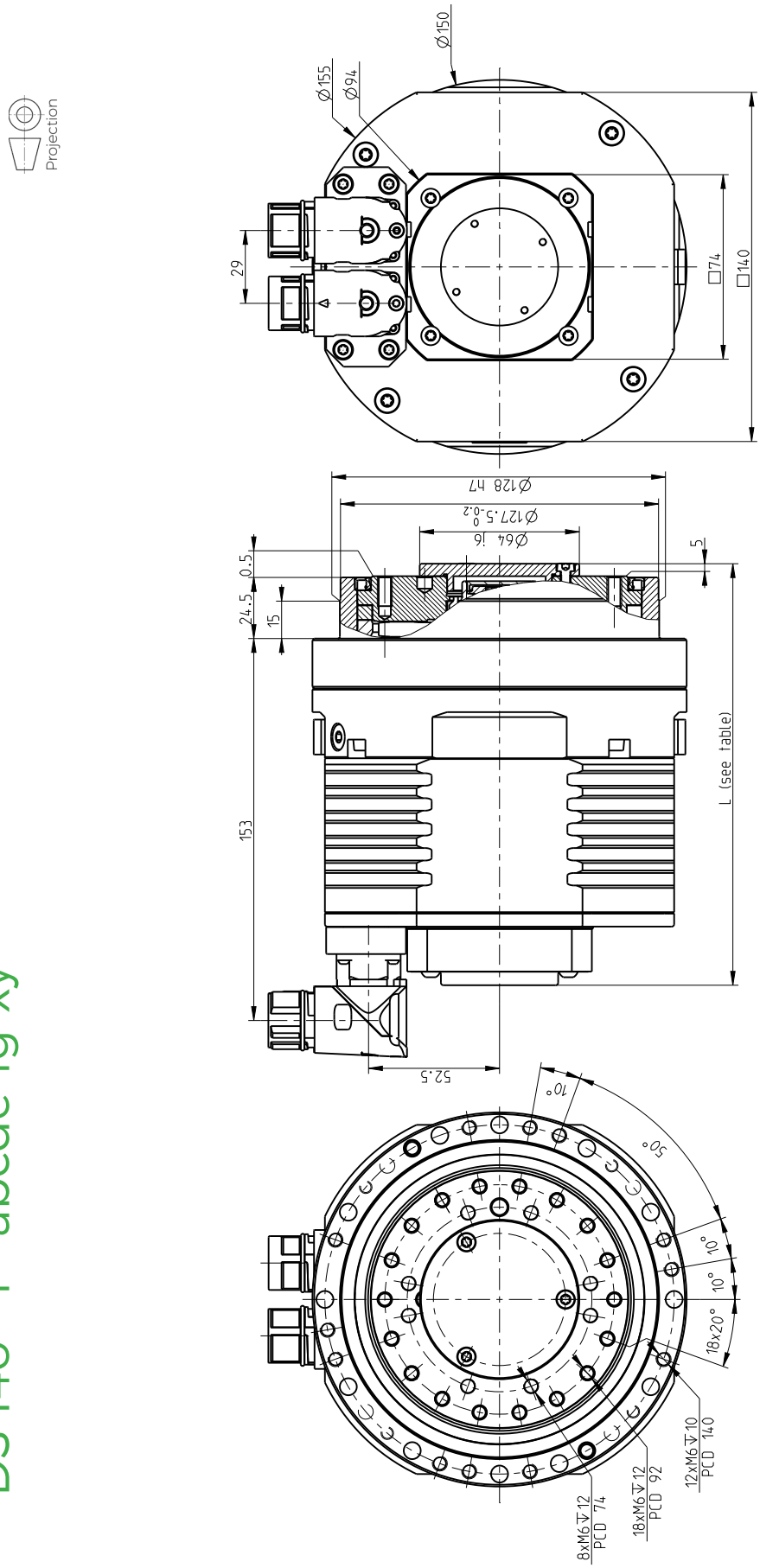

Size	Feedback type (d)	Without brake		With brake	
		Dimension L ± 0,5 [mm]	Weight m [kg] *	Dimension L ± 0,5 [mm]	Weight m [kg] *
DS 140	OA	148	11	181	12.1
	OB,OC	165	11	208	12.1
	OD,OE	165	11	208	12.1
	OH	199	11	226	12.1

DS SERIES

DS 140 - i - abcde-fg-xy

Courtesy of Steven Engineering, Inc - (800) 258-9200 - sales@steveneng.com - www.stevenengineering.com

DS 155 - i - abcde-fg-xy

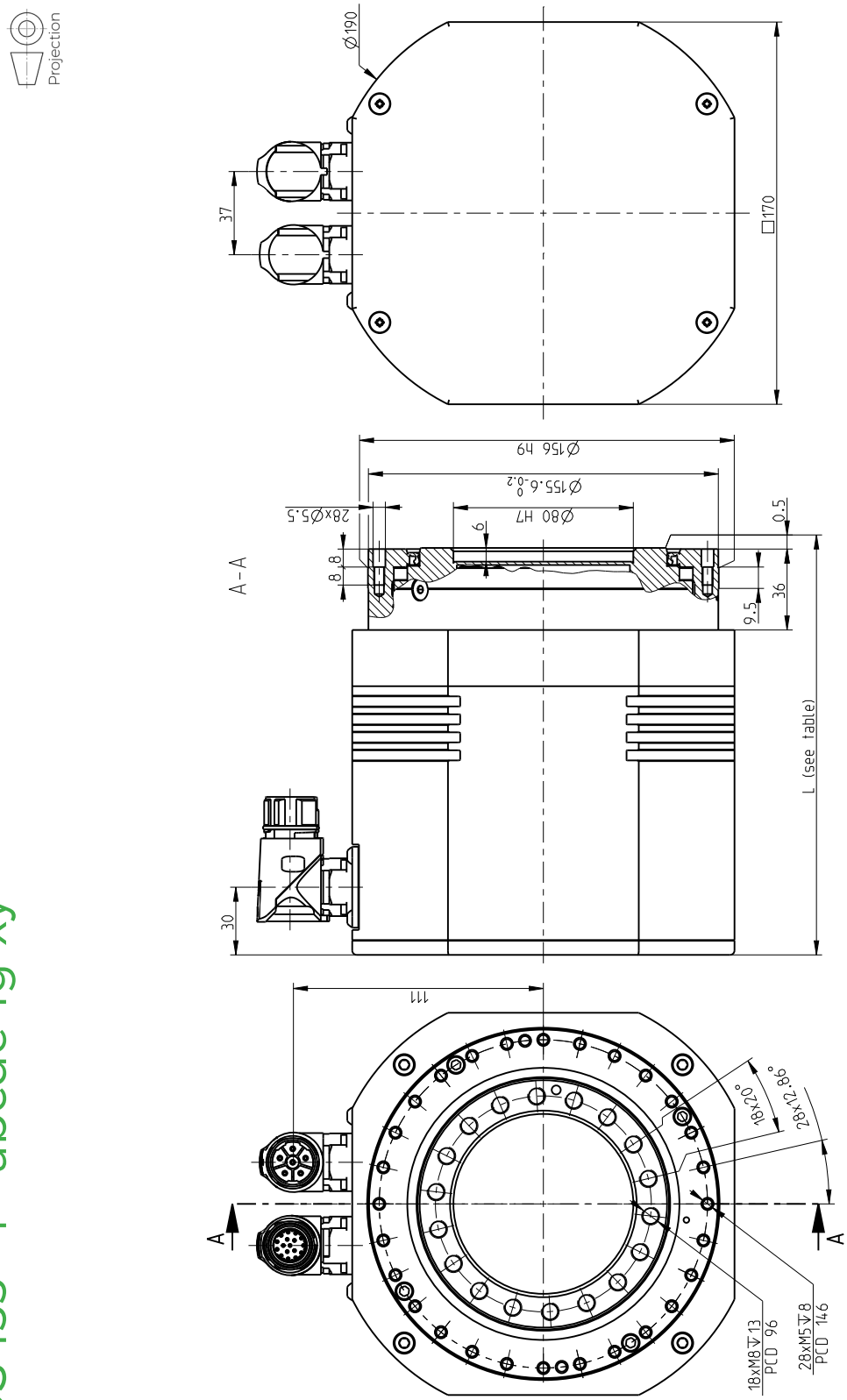

Size	Feedback type (d)	Without brake		With brake	
		Dimension L ± 0,5 [mm]	Weight m [kg] *	Dimension L ± 0,5 [mm]	Weight m [kg] *
DS 155	OA	181	14.2	181	16.2
	OB,OC	181	14.4	181	16.2
	OD,OE	181	14.4	181	16.2
	OH	181	14.7	181	16.5
	OK,OL	181	14.6	181	16.4
	ON	181	14.4	181	16.2

DS 155 – i – abcde-fg-xy

SPINEA BY TIMKEN

Courtesy of Steven Engineering, Inc - (800) 258-9200 - sales@steveneng.com - www.stevenengineering.com

Courtesy of Steven Engineering, Inc - (800) 258-9200 - sales@steveneng.com - www.stevenengineering.com

Tab. 8.1b: DS series technical data table

Reduction Gear parameters		Tolerance	DS 050		
Reduction ratio	i		63		
Rated output torque	T_R [Nm]		18		
Acceleration/braking output torque	T_{acc} [Nm]		36		
Rated input speed	n_r [rpm]		2 000		
Maximum allowable input speed [9]	n_{max} [rpm]		5 000		
Allowable moment [2][3]	M_{cmax} [Nm]		44		
Tilting stiffness [1][6]	M_t [Nm/arcmin]		4		
Torsional stiffness [1][7]	k_t [Nm/arcmin]		2.5		
Lost motion	LM [arcmin]		< 1.5		
Hysteresis	H [arcmin]		< 1.5		
Rated radial force [2]	F_{rR} [kN]		1.44 [8]		
Maximum axial force [2][4]	$F_{a\,max}$ [kN]		1.9		
Gear lubrication			Grease Castrol TRIBOL GR TT 1 PD		
Reduction gear limit temperature	[°C]		60 °C		
Standard ambient temperature range	[°C]		-10 °C to +40 °C		
Motor parameters					
DC BUS voltage	U_{dc} [V_{dc}]	+/- 10%	24	320	560
Motor rated speed	n_n [rpm]		3 500	3 500	3 500
Motor rated torque	M_n [Nm]	+/- 10%	0.23	0.23	0.23
Motor rated current	I_n [A_{rms}]		7.1	0.58	0.58
Motor stall torque	M_o [Nm]	+/- 10%	0.24	0.24	0.24
Motor stall current	I_o [A_{rms}]		7.4	0.6	0.6
Motor peak torque	M_{max} [Nm]	+/- 10%	1	1	1
Motor peak current	I_{max} [A]		30.8	2.5	2.5
Motor back-EMF constant	K_E [V_{peak}/krpm]	+/- 10%	2.7	36	36
Motor torque constant	K_T [Nm/A_{rms}]	+/- 10%	0.032	0.4	0.4
Terminal resistance (L-L)	R_{2ph} [Ω]	+/- 10%	0.2	36	36
Terminal inductance (L-L)	L_{2ph} [mH]	+/- 20%	0.2	36	36
Number of poles	2p		6	6	6
Electromagnetic brake DC supply	[V_{dc}]		24, Special		
Electromagnetic brake torque at input	[Nm]		0.4		
Protection class			IP 64		
Motor Insulation class			F		
Paint			RAL 9005		
Motor number of phases			3		
Motor type of connection			Y(star-configuration)		

1) Mean statistical value
2) Load at output speed 32 rpm for size 050, other sizes at 15 rpm
3) Moment M_c max at F_a=0. If F_a≠0 see Glossary
4) Axial force F_a max for M_c=0 (In case of size 050 also F_r=0 condition has to be fullfiled). If M_c≠0 see Glossary
5) 3 900 rpm for ratio 67 ; 4 500 rpm for ratios 89, 119
6) The parameter depends on the high precision reduction gear version.
7) The parameter depends on the version, ratio and lost motion of the high precision reduction gear.
8) For size 050 it is value of MAXIMUM RADIAL FORCE $F_{r\,max}$ for a_2=0; F_a=0 and at 32 rpm output speed. For a_2>0; F_a=0 at 32 rpm output speed $F_{r\,max}$= 0.044/(a_2+0.0305) [kN]. a_2 represents the distance of the radial force centre from the front of the output flange in meters see Glossary.
9) Instantaneous speed peak that may occur within the working cycle. Note please the temperature on the gear case that should not significantly exceed 60°C
10) 4 500 rpm for ratio 73 ; 4 800 rpm for ratio 95
11) 4 000 rpm for ratio 55 ; 4 500 rpm for ratio 103
12) 3 400 rpm for ratio 63 ; 3 800 rpm for ratio 109 ; 4 200 rpm for ratio 133

SPINEA BY TIMKEN

Courtesy of Steven Engineering, Inc - (800) 258-9200 - sales@steveneng.com - www.stevenengineering.com

Tab. 8.1b: DS series technical data table - continued

DS 070			DS 095			DS 110		
57, 75			73, 95			67, 89, 119		
50			85			122		
100			170			244		
2 000			2 000			2 000		
5 000			4 500 / 4 800 [10]			3 900 / 4 500 [5]		
142			410			740		
35			120			150		
7			15			22		
< 1.5			< 1			< 1		
< 1.5			< 1			< 1		
2.8			3.5			9.3		
4.1			11.1			13.1		
Grease Castrol TRIBOL GR TT 1 PD			Grease Castrol TRIBOL GR TT 1 PD			Grease Castrol TRIBOL GR TT 1 PD		
60 °C			60 °C			60 °C		
-10 °C to +40 °C			-10 °C to +40 °C			-10 °C to +40 °C		
24	320	560	24	320	560	24	320	560
2 500	4 500	4 500	4 000	4 000	4 000	2 500	3 000	3 000
0.88	0.76	0.76	1.4	1.4	1.4	3.4	3.2	3.2
13	1.2	0.7	27	5.6	3.1	37	4.9	2.8
0.9	0.9	0.9	1.6	1.6	1.6	3.8	3.8	3.8
13.3	1.42	0.83	31	6.4	3.5	41	6	3
3	3	3	5.5	5.5	5.5	11	11	11
44.3	4.7	2.8	106.1	22	12.1	120	17	10
5.7	68.3	105.6	4.4	25	47	8	57	103
0.0677	0.63	1.09	0.052	0.25	0.46	0.09	0.65	1.14
0.13	17	40.5	0.052	1.2	4.36	0.027	1.4	4.5
0.25	34.4	87	0.11	2.84	8.71	0.15	7.4	24
10	10	10	10	10	10	10	10	10
24, Special			24, Special			24, Special		
4.5			2			4.5		
IP 64			IP 64			IP 64		
F			F			F		
RAL 9005			RAL 9005			RAL 9005		
3			3			3		
Y(star-configuration)			Y(star-configuration)			Y(star-configuration)		

IMPORTANT NOTES:

- Load values in the table are valid for the nominal life of L_{10} = 6 000 hours. Service life for average torque T_a and average speed n_a other than T_R ,n_R can be calculated. Please contact manufacturer with estimated duty cycle.
- High precision reduction gears are preffered for intermittent duty cycles (S3-S8); the output speed in aplications is an inverted variable. The S1 continuous duty cycle should to be consulted with manufacturer
- Please consult maximum speed in duty cycle with the manufacturer
- The values in the table refer to ambient temperature within 20°C – 25°C
- For ambient temperatures lower than -10°C pre-heating might be considered - please consult manufacturer

Courtesy of Steven Engineering, Inc - (800) 258-9200 - sales@steveneng.com - www.stevenengineering.com

Tab. 8.1b: DS series technical data table - continued

Reduction Gear parameters		Tolerance	DS 115		
Reduction ratio	i		55, 103		
Rated output torque	T_R [Nm]		170		
Acceleration/braking output torque	T_{acc} [Nm]		340		
Rated input speed	n_r [rpm]		2 000		
Maximum allowable input speed [9]	n_{max} [rpm]		4 000 / 4 500 [11]		
Allowable moment [2][3]	M_{cmax} [Nm]		550		
Tilting stiffness [1][6]	M_t [Nm/arcmin]		220		
Torsional stiffness [1][7]	k_t [Nm/arcmin]		32		
Lost motion	LM [arcmin]		< 0.5		
Hysteresis	H [arcmin]		< 1		
Rated radial force [2]	F_{rR} [kN]		4		
Maximum axial force [2][4]	$F_{a\,max}$ [kN]		12		
Gear lubrication			Grease Castrol TRIBOL GR TT 1 PD		
Reduction gear limit temperature	[°C]		60 °C		
Standard ambient temperature range	[°C]		-10 °C to +40 °C		
Motor parameters					
DC BUS voltage	U_{dc} [V_{dc}]	+/- 10%	24	320	560
Motor rated speed	n_n [rpm]		3 000	4 000	4 000
Motor rated torque	M_n [Nm]	+/- 10%	4	4	4
Motor rated current	I_n [A_{rms}]		84	6.33	3.8
Motor stall torque	M_o [Nm]	+/- 10%	4	4	4
Motor stall current	I_o [A_{rms}]		84	6.33	3.8
Motor peak torque	M_{max} [Nm]	+/- 10%	10	10	10
Motor peak current	I_{max} [A]		231	15.82	10.45
Motor back-EMF constant	K_E [V_{peak}/krpm]	+/- 10%	4.1	54.1	93.3
Motor torque constant	K_T [Nm/A_{rms}]	+/- 10%	0.05	0.63	1.05
Terminal resistance (L-L)	R_{2ph} [Ω]	+/- 10%	0.011	0.83	2.3
Terminal inductance (L-L)	L_{2ph} [mH]	+/- 20%	0.02	3.65	10.5
Number of poles	2p		10	10	10
Electromagnetic brake DC supply	[V_{dc}]		24, Special		
Electromagnetic brake torque at input	[Nm]		4.5		
Protection class			IP 64		
Motor Insulation class			F		
Paint			RAL 9005		
Motor number of phases			3		
Motor type of connection			Y(star-configuration)		

1) Mean statistical value
2) Load at output speed 32 rpm for size 050, other sizes at 15 rpm
3) Moment M_c max at F_a=0. If F_a≠0 see Glossary
4) Axial force F_a max for M_c=0 (In case of size 050 also F_r=0 condition has to be fullfiled). If M_c≠0 see Glossary
5) 3 900 rpm for ratio 67 ; 4 500 rpm for ratios 89, 119
6) The parameter depends on the version of high precision reduction gear.
7) The parameter depends on the version, ratio and lost motion of the high precision reduction gear.
8) For size 050 this is value of MAXIMUM RADIAL FORCE $F_{r\,max}$ for a_2=0; F_a=0 and at 32 rpm output speed. For a_2>0; F_a=0 at 32 rpm output speed $F_{r\,max}$= 0.044/(a_2+0.0305) [kN]. a_2 represents the distance of the radial force centre from the front of the output flange in meters see Glossary.
9) Instantaneous speed peak that may occur within the working cycle. Note please the temperature on the gear case that should not exceed significantly 60°C
10) 4 500 rpm for ratio 73 ; 4 800 rpm for ratio 95
11) 4 000 rpm for ratio 55 ; 4 500 rpm for ratio 103
12) 3 400 rpm for ratio 63 ; 3 800 rpm for ratio 109 ; 4 200 rpm for ratio 133

SPINEA BY TIMKEN

Courtesy of Steven Engineering, Inc - (800) 258-9200 - sales@steveneng.com - www.stevenengineering.com

Tab. 8.1b: DS series technical data table - continued

DS 140			DS 155		
69, 115			63, 109, 133		
268			460		
670			1 150		
2 000			2 000		
4 500			3 400 / 3 800 / 4 200 [12)]		
1 160			1 640		
380			900		
62			87		
< 1			< 0.5		
< 1			< 1		
11.5			8.3		
17			26		
Grease Castrol TRIBOL GR TT 1 PD			Grease Castrol TRIBOL GR TT 1 PD		
60 °C			60 °C		
-10 °C to +40 °C			-10 °C to +40 °C		
24	320	560	24	320	560
4 000	4 000	4 000	On request	4 000	4 000
4	4	4		5	5
74.1	5.6	3.2		10	6
4.5	4.5	4.5		11	11
83.3	6.3	3.6		21.9	13.5
13.5	13.5	13.5		23	23
250	18.8	11		45.9	27.6
4.76	63	111		44	77
0.054	0.72	1.26		0.5	0.83
0.0055	1	3		0.15	0.4
0.04	7	22		0.57	1.7
10	10	10		24	24
24, Special			24, Special		
4.5			12		
IP 64			IP 64		
F			F		
RAL 9005			RAL 9005		
3			3		
Y(star-configuration)			Y(star-configuration)		

IMPORTANT NOTES:

- Load values in the table are valid for the nominal life of L_{10} = 6 000 hours. Service life for average torque T_a and average speed n_a other than T_R ,n_R can be calculated. Please contact manufacturer with estimated duty cycle.
- High precision reduction gears are preffered for intermittent duty cycles (S3-S8); the output speed in aplications is an inverted variable. The S1 continuous duty cycle should to be consulted with manufacturer
- Please consult maximum speed in duty cycle with the manufacturer
- The values in the table refer to ambient temperature within 20°C – 25°C
- For ambient temperatures lower than -10°C pre-heating might be considered - please consult manufacturer

Courtesy of Steven Engineering, Inc - (800) 258-9200 - sales@steveneng.com - www.stevenengineering.com

Tab. 8.1c: Inertia at input (DS actuator without brake)

Feedback type (d)	$J_{w/o\ brake}$	DS 050	DS 070	DS 095	DS 110	DS 115	DS 140	DS 155
OA	10^{-4} kgm²	0.080	0.509	1.657	1.825	5.803	5.745	16.069
OB	10^{-4} kgm²	0.061	0.488	1.646	1.814	5.784	5.736	16.039
OC	10^{-4} kgm²	0.061	0.488	1.646	1.814	5.784	5.736	16.039
OD	10^{-4} kgm²	0.062	0.504	1.640	1.830	5.780	5.728	16.085
OE	10^{-4} kgm²	0.062	0.504	1.640	1.830	5.780	5.728	16.085
OF	10^{-4} kgm²	–	–	1.661	–	–	–	–
OG	10^{-4} kgm²	0.061	–	1.661	–	–	–	–
OH	10^{-4} kgm²	–	0.504	1.661	1.830	5.903	5.770	16.085
OJ	10^{-4} kgm²	–	–	–	–	5.903	–	–
OK	10^{-4} kgm²	0.060	–	1.640	–	5.788	–	16.039
OL	10^{-4} kgm²	0.060	–	1.640	–	5.788	–	16.039
ON	10^{-4} kgm²	–	–	–	–	5.795	–	16.082
OP	10^{-4} kgm²	–	0.484	1.640	–	–	–	–
OQ	10^{-4} kgm²	–	0.484	1.640	–	–	–	–
OR	10^{-4} kgm²	–	–	–	–	–	–	–
OS	10^{-4} kgm²	–	–	–	–	–	–	–

Tab. 8.1d: Inertia at input (DS actuator with brake)

Feedback type (d)	$J_{w\ brake}$	DS 050	DS 070	DS 095	DS 110	DS 115	DS 140	DS 155
OA	10^{-4} kgm²	0.121	0.878	1.707	2.193	5.926	12.100	16.210
OB	10^{-4} kgm²	0.101	0.856	1.695	2.182	5.907	12.120	16.230
OC	10^{-4} kgm²	0.101	0.856	1.695	2.182	5.907	12.120	16.230
OD	10^{-4} kgm²	0.101	0.871	1.689	2.196	5.903	12.100	16.210
OE	10^{-4} kgm²	0.101	0.871	1.689	2.196	5.903	12.100	16.210
OF	10^{-4} kgm²	–	–	1.711	–	–	–	–
OG	10^{-4} kgm²	–	–	1.711	–	–	–	–
OH	10^{-4} kgm²	–	0.871	1.711	2.196	5.926	12.100	16.450
OJ	10^{-4} kgm²	–	–	–	–	5.926	–	–
OK	10^{-4} kgm²	0.100	–	1.690	–	5.901	–	16.360
OL	10^{-4} kgm²	0.100	–	1.690	–	5.901	–	16.360
ON	10^{-4} kgm²	–	–		–	5.918	–	16.180
OP	10^{-4} kgm²	–	–	1.690	–	–	–	–
OQ	10^{-4} kgm²	–	–	1.690	–	–	–	–
OR	10^{-4} kgm²	–	–		–	–	–	–
OS	10^{-4} kgm²	–	–		–	–	–	–

SPINEA BY TIMKEN

Courtesy of Steven Engineering, Inc - (800) 258-9200 - sales@steveneng.com - www.stevenengineering.com

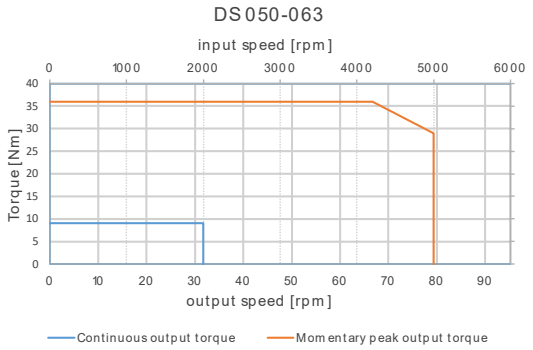

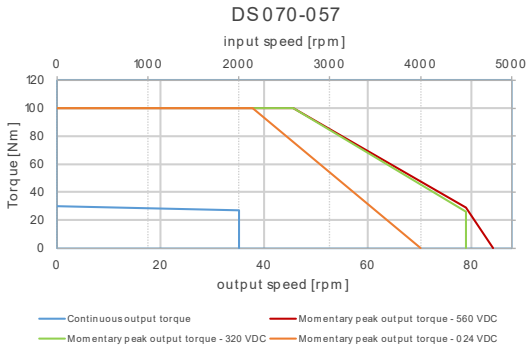

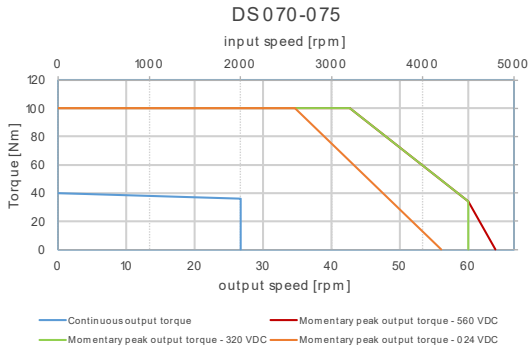

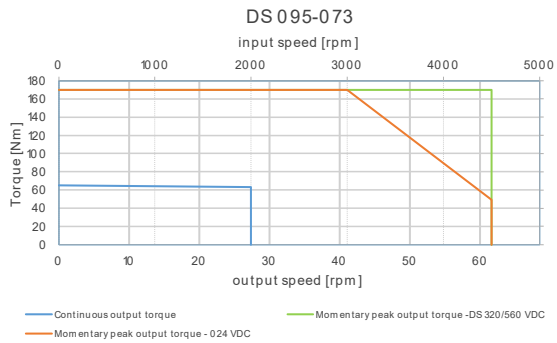

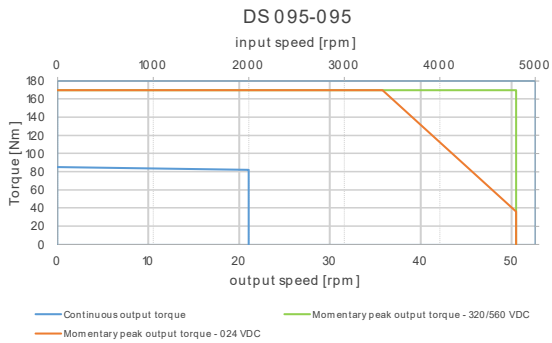

Courtesy of Steven Engineering, Inc - (800) 258-9200 - sales@steveneng.com - www.stevenengineering.com

Performance characteristics

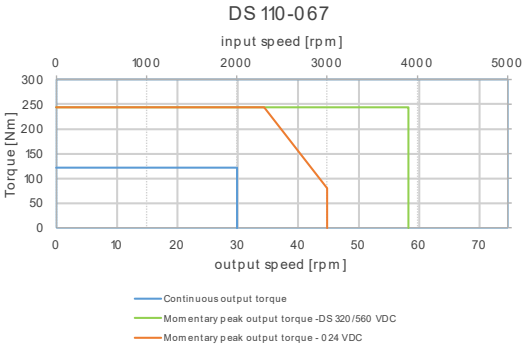

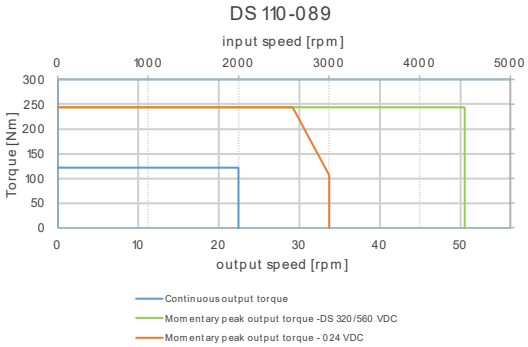

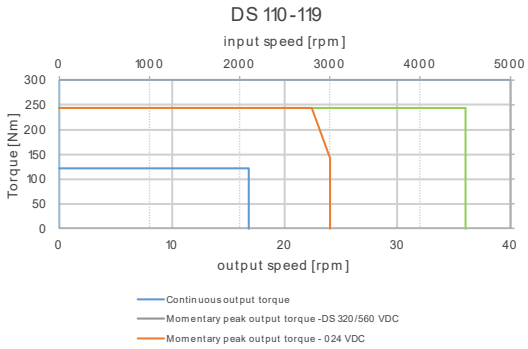

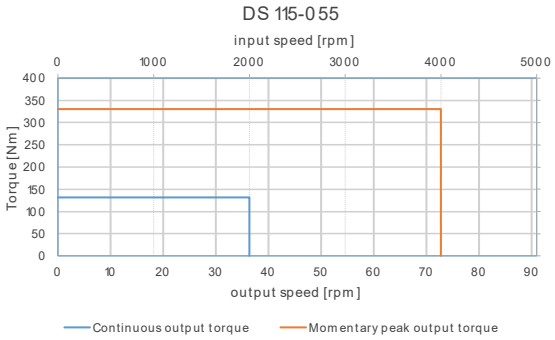

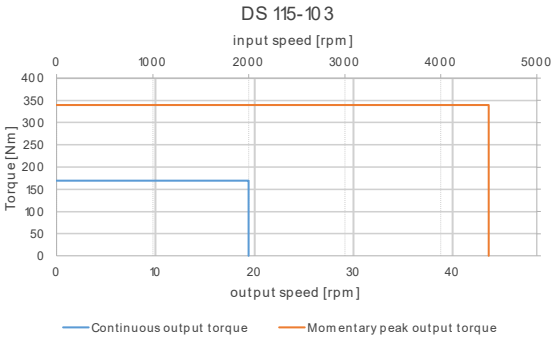

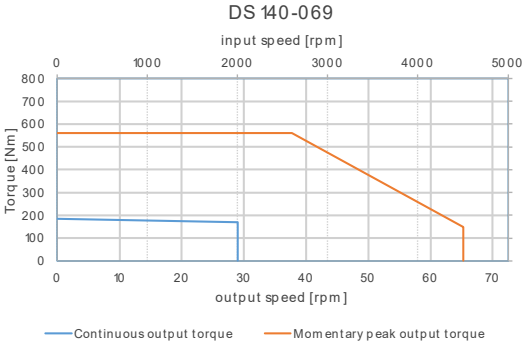

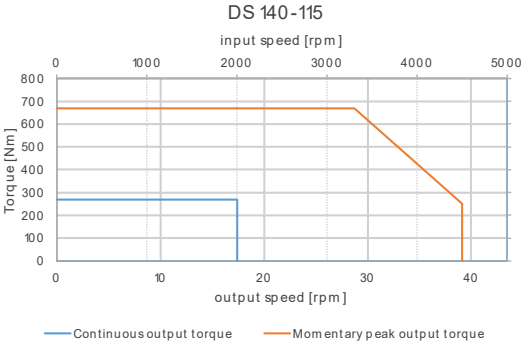

SPINEA BY TIMKEN
Courtesy of Steven Engineering, Inc - (800) 258-9200 - sales@steveneng.com - www.stevenengineering.com

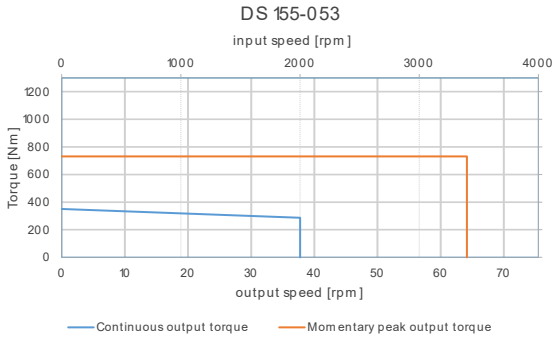

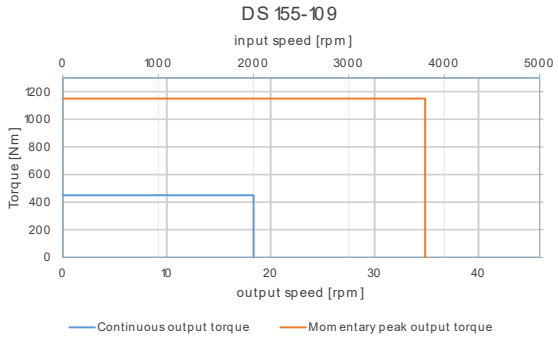

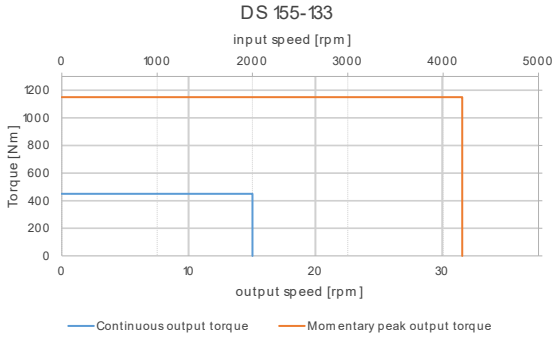

Courtesy of Steven Engineering, Inc - (800) 258-9200 - sales@steveneng.com - www.stevenengineering.com

Courtesy of Steven Engineering, Inc - (800) 258-9200 - sales@steveneng.com - www.stevenengineering.com

DriveSpin®

DSH SERIES

HOLLOW SHAFT

DriveSpin® **DSH** SERIES IS EXCELLENT
IN BOTH PAN – TILT UNITS
AND MANY OTHERS

8.2 DSH series

Advantages

- **low lost motion**
- **low moment of inertia**
- **high reduction ratio**
- **high kinematic accuracy**
- **high moment overload capacity**
- **high capacity of the integrated radial-axial output bearings**
- **high dynamic performance**

The **Drive**Spin® **DSH** electric actuators are characterized by the short axial length and by the possibility to use a through hole for routing cables, pipes, and drive shafts. Fully sealed compact actuators equipped with zero-backlash reduction gears have high power density and large hole inner diameter, from 8 to 40mm. Excellent positioning accuracy and positioning repeatability. DSH maintain radial-axial and torque load capacity and are known for high overload capacity of reduction gear and AC servomotor, featuring high dynamics. The voltage and feedback variability will widely satisfy all customers requirements. This allows even demanding tasks such as exact positioning or fast movement of heavy loads, to be performed with a high degree of repetitive accuracy. Rated output torque is within 18 Nm - 420 Nm.

Courtesy of Steven Engineering, Inc - (800) 258-9200 - sales@steveneng.com - www.stevenengineering.com

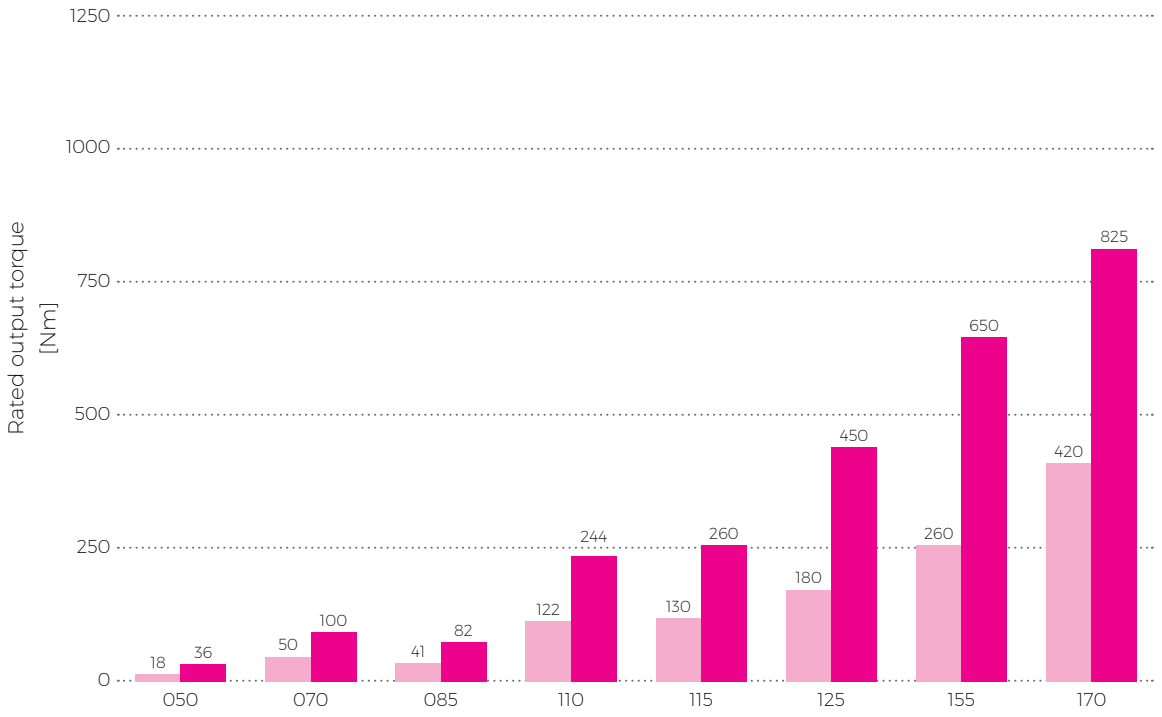

Tab. 8.2a: Rated output torque

Size		050	070	085	110	115	125	155	170
Rated output torque	T_R [Nm]	18	50	41	122	130	180	260	420
Acceleration/ braking output torque	T_{acc} [Nm]	36	100	82	244	260	450	650	825

Courtesy of Steven Engineering, Inc - (800) 258-9200 - sales@steveneng.com - www.stevenengineering.com

DSH 050 - i - abcde-fg-xy

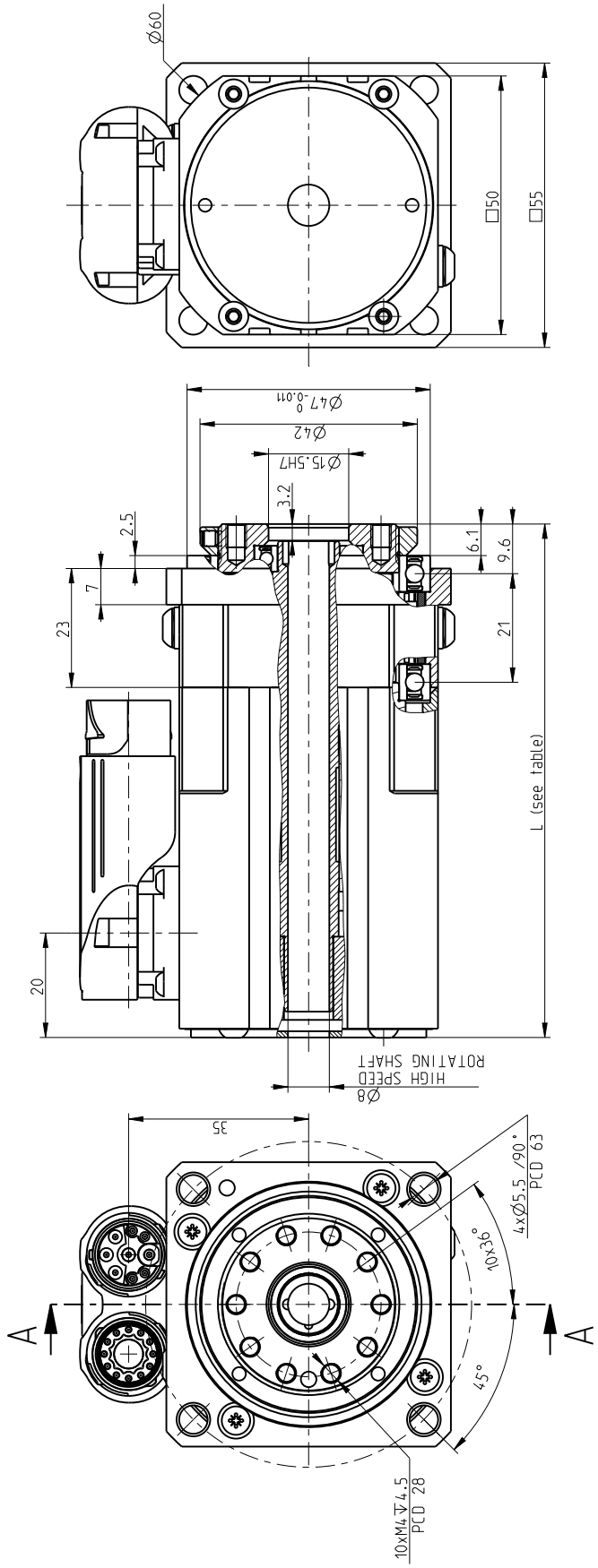

Size	Feedback type (d)	Without brake		With brake	
		Dimension L ± 0,5 [mm]	Weight m [kg] *	Dimension L ± 0,5 [mm]	Weight m [kg] *
DSH 050	0A	107	1.2	-	-

DSH 050 – i – abcde-fg-xy

Hollow shaft rotates at motor speed

SPINEA BY TIMKEN

Courtesy of Steven Engineering, Inc - (800) 258-9200 - sales@steveneng.com - www.stevenengineering.com

DSH 070 - i - abcde-fg-xy

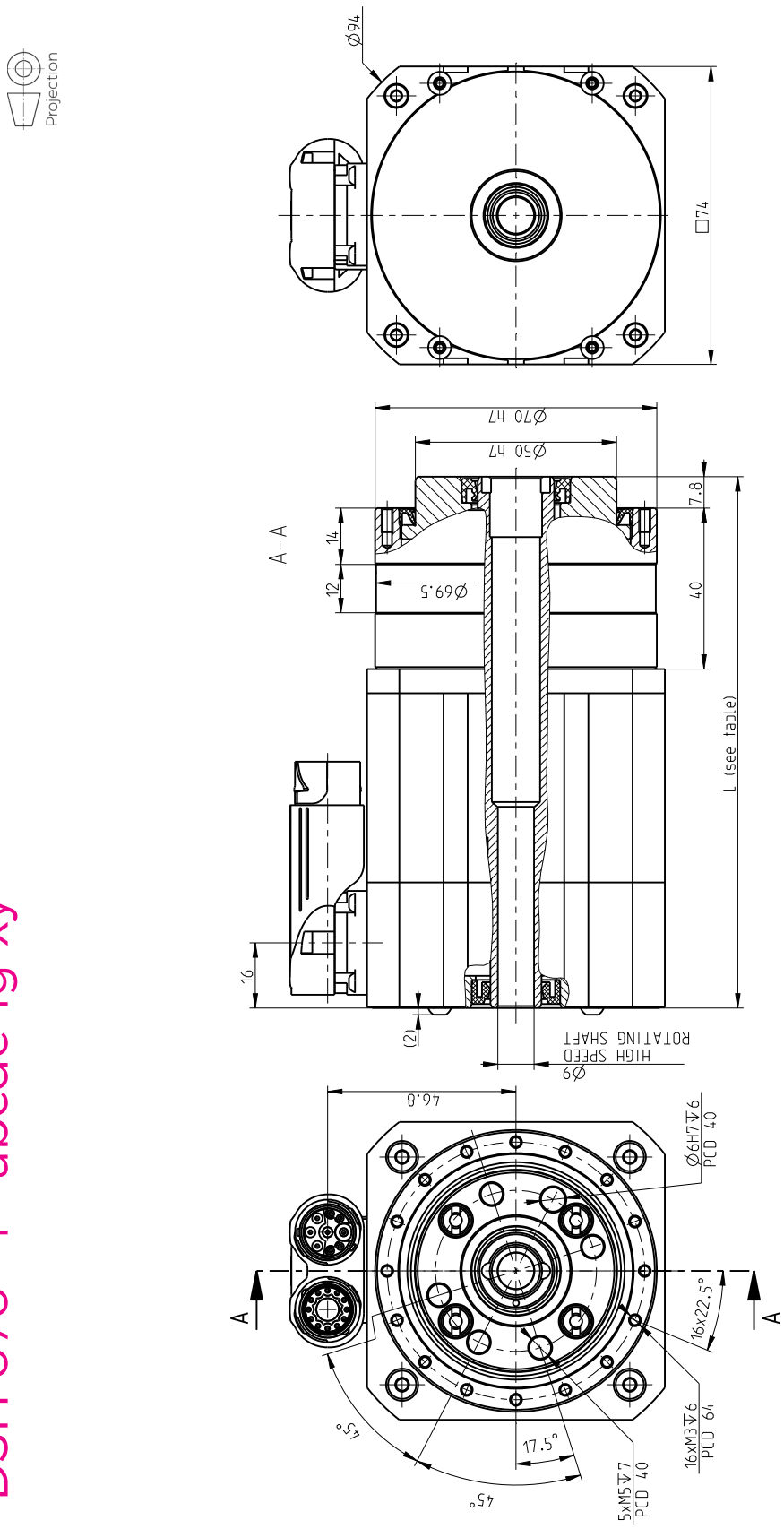

Size	Without brake		With brake	
	Feedback type (d)	Dimension L ± 0,5 [mm]	Weight m [kg] *	Dimension L ± 0,5 [mm]	Weight m [kg] *
DSH 070	OA	153	2.3	-	-
	OB,OC	133	2.1	-	-

Hollow shaft rotates at motor speed

DSH 070 – i – abcde-fg-xy

SPINEA BY TIMKEN
Courtesy of Steven Engineering, Inc - (800) 258-9200 - sales@steveneng.com - www.stevenengineering.com

DSH 085 - i - abcde-fg-xy

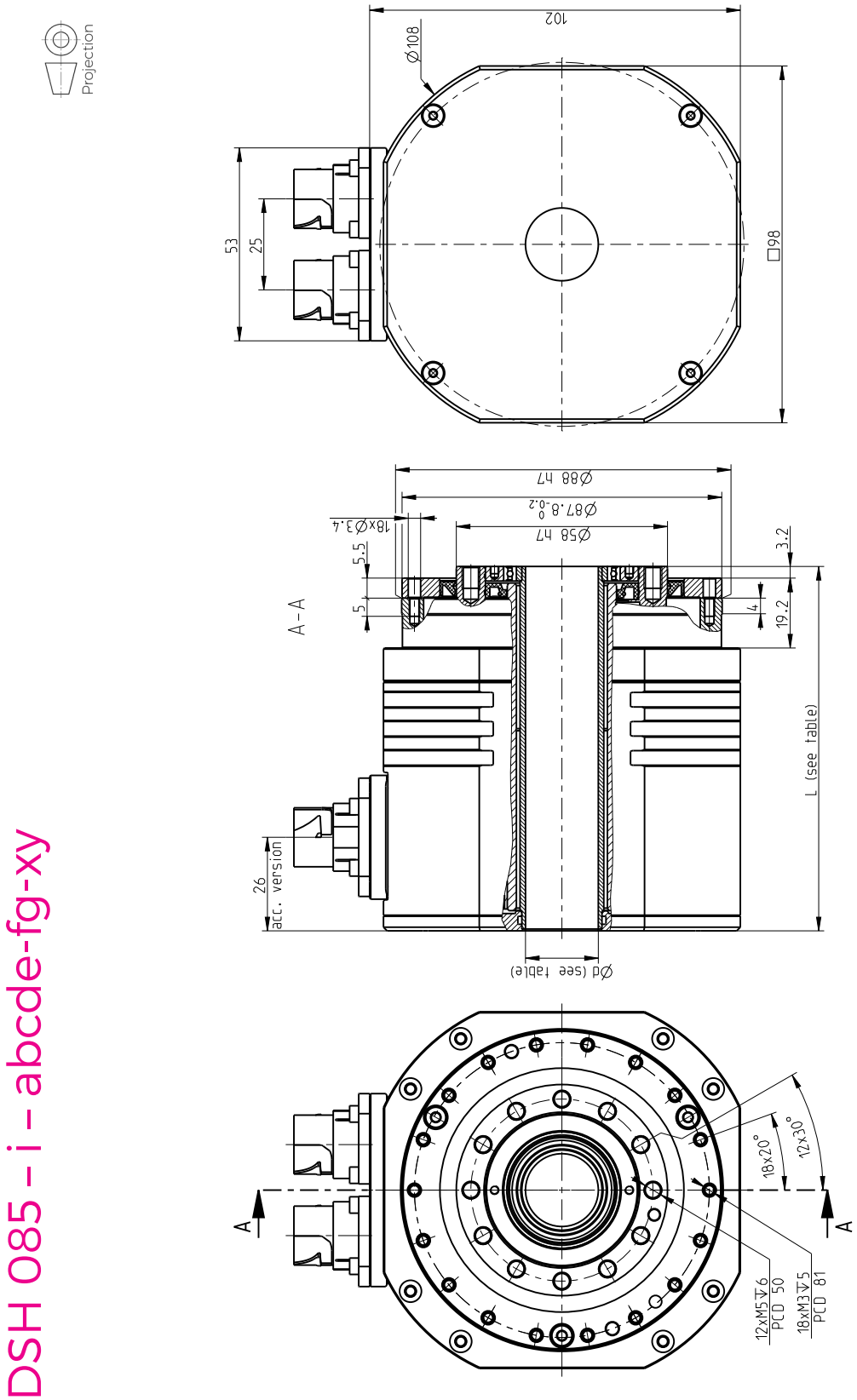

Size	Feedback type (d)	Hollow shaft diameter Ød [mm]	Without brake		With brake	
			Dimension L ± 0.5 [mm]	Weight m [kg] *	Dimension L ± 0.5 [mm]	Weight m [kg] *
DSH 085	OA	20	110	4.1	141	4.6
	OB,OC	14	108	3.8	138	4.4
	OD,OE	20	100	3.3	131	4.5
	ON	20	100	3.5	131	4.5

DSH 085 – i – abcde-fg-xy

SPINEA BY TIMKEN

Courtesy of Steven Engineering, Inc - (800) 258-9200 - sales@steveneng.com - www.stevenengineering.com

DSH 110 - i - abcde-fg-xy

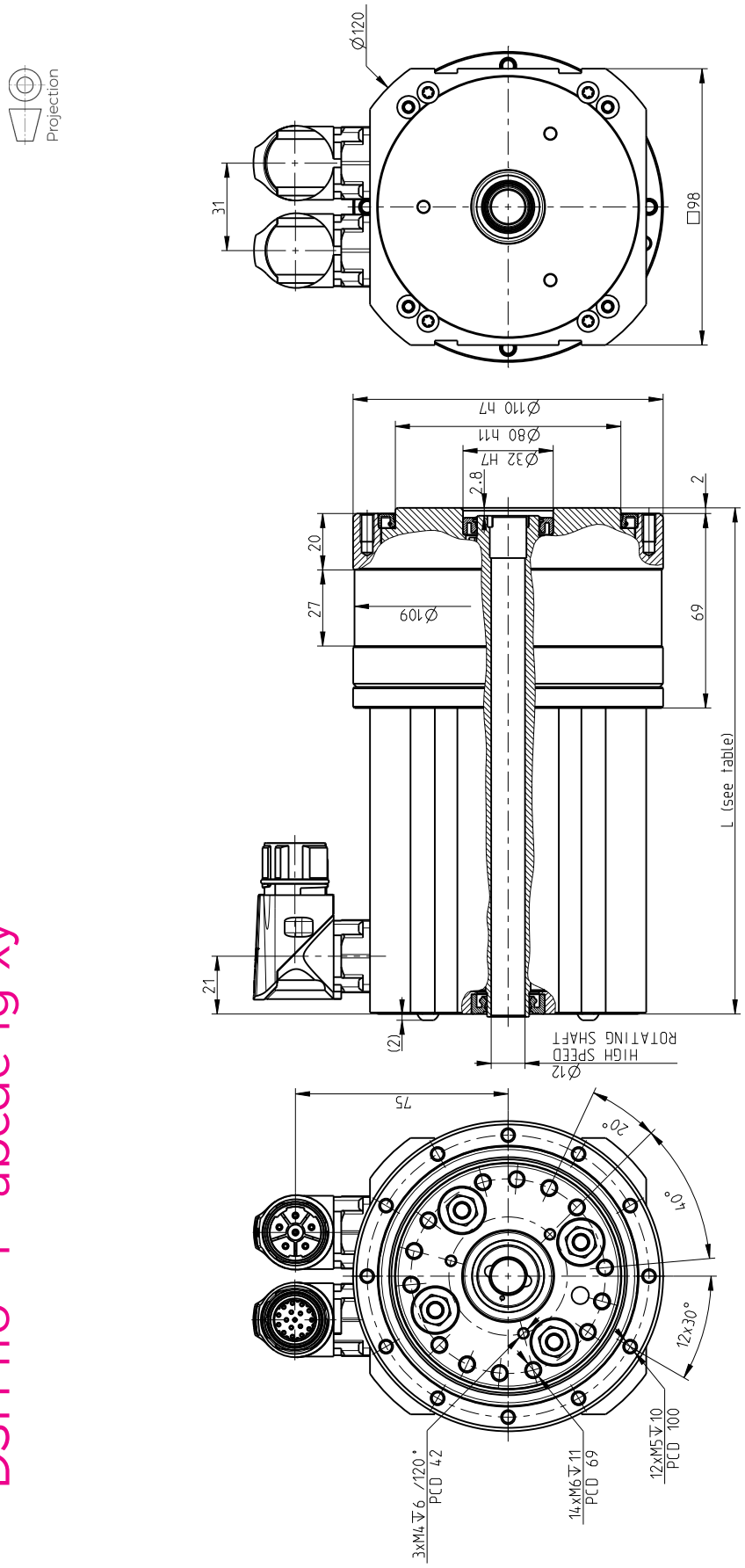

Size	Feedback type (d)	Without brake		With brake	
		Dimension L ± 0.5 [mm]	Weight m [kg] *	Dimension L ± 0.5 [mm]	Weight m [kg] *
DSH 110	OA	181	8.7		

Hollow shaft rotates at motor speed

DSH 110 – i – abcde-fg-xy

SPINEA BY TIMKEN
Courtesy of Steven Engineering, Inc - (800) 258-9200 - sales@steveneng.com - www.stevenengineering.com

DSH 115 - i - abcde-fg-xy

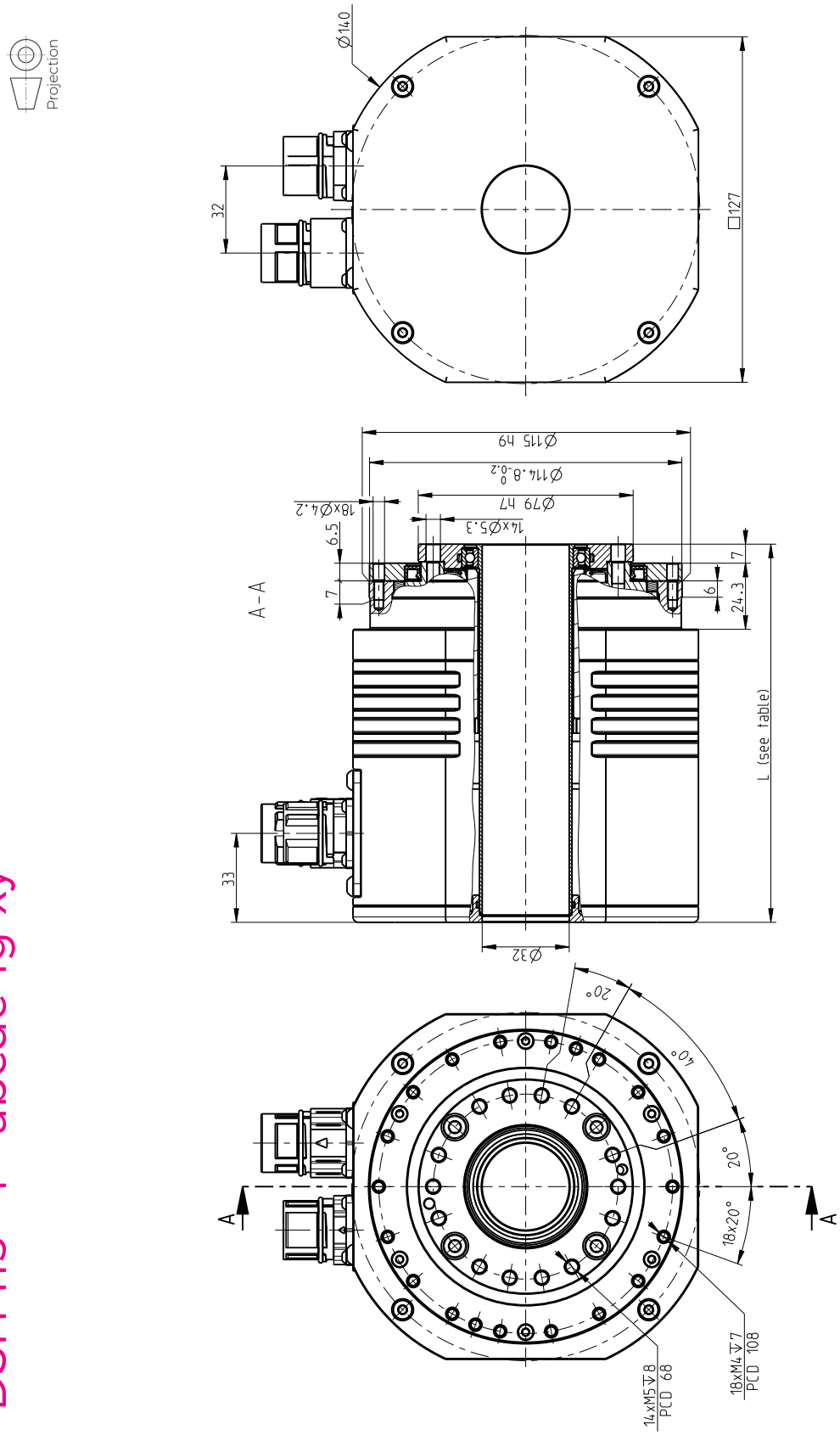

Size	Feedback type (d)	Without brake Dimension L ± 0.5 [mm]	Without brake Weight m [kg] *	With brake Dimension L ± 0.5 [mm]	With brake Weight m [kg] *
DSH 115	OA	144	7.3	168	8.3
	OB	139	6.5	165	7.5
	OD.OE	139	6.5	165	7.5
	OF	139	6.5	165	7.5

DSH 115 – i – abcde-fg-xy

SPINEA BY TIMKEN

Courtesy of Steven Engineering, Inc - (800) 258-9200 - sales@steveneng.com - www.stevenengineering.com

DSH 125 - i - abcde-fg-xy

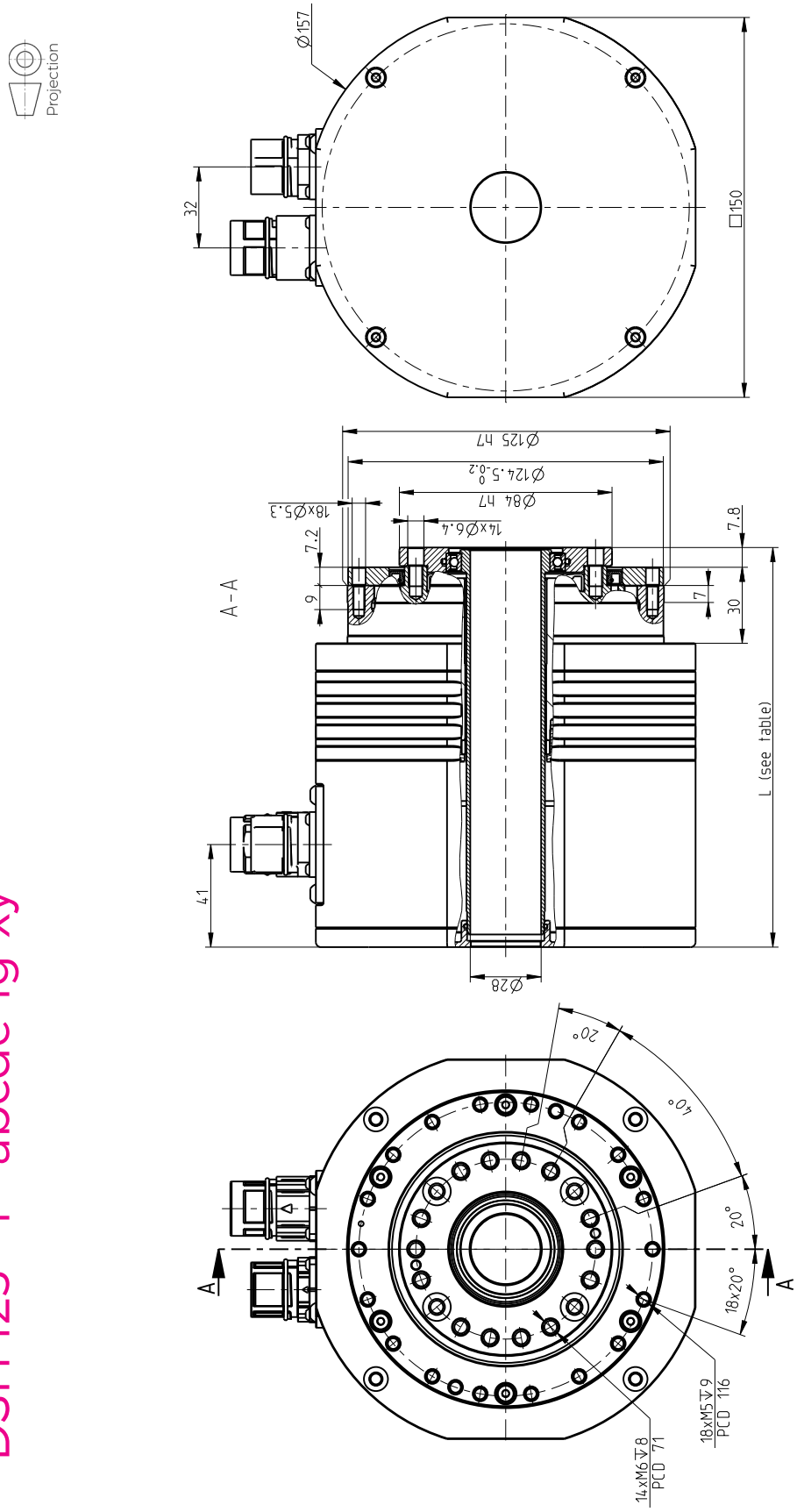

Size	Feedback type (d)	Without brake		With brake	
		Dimension L ± 0.5 [mm]	Weight m [kg] *	Dimension L ± 0.5 [mm]	Weight m [kg] *
DSH 125	OA	158	11.2	186	12.9
	OB,OC	158	10.4	186	11.7
	OD,OE	158	10.4	186	11.7
	ON	158	9.0	186	10.3

DSH 125 – i – abcde-fg-xy

DSH SERIES

Courtesy of Steven Engineering, Inc - (800) 258-9200 - sales@steveneng.com - www.stevenengineering.com

DSH 155 - i - abcde-fg-xy

DSH 155 – i – abcde-fg-xy

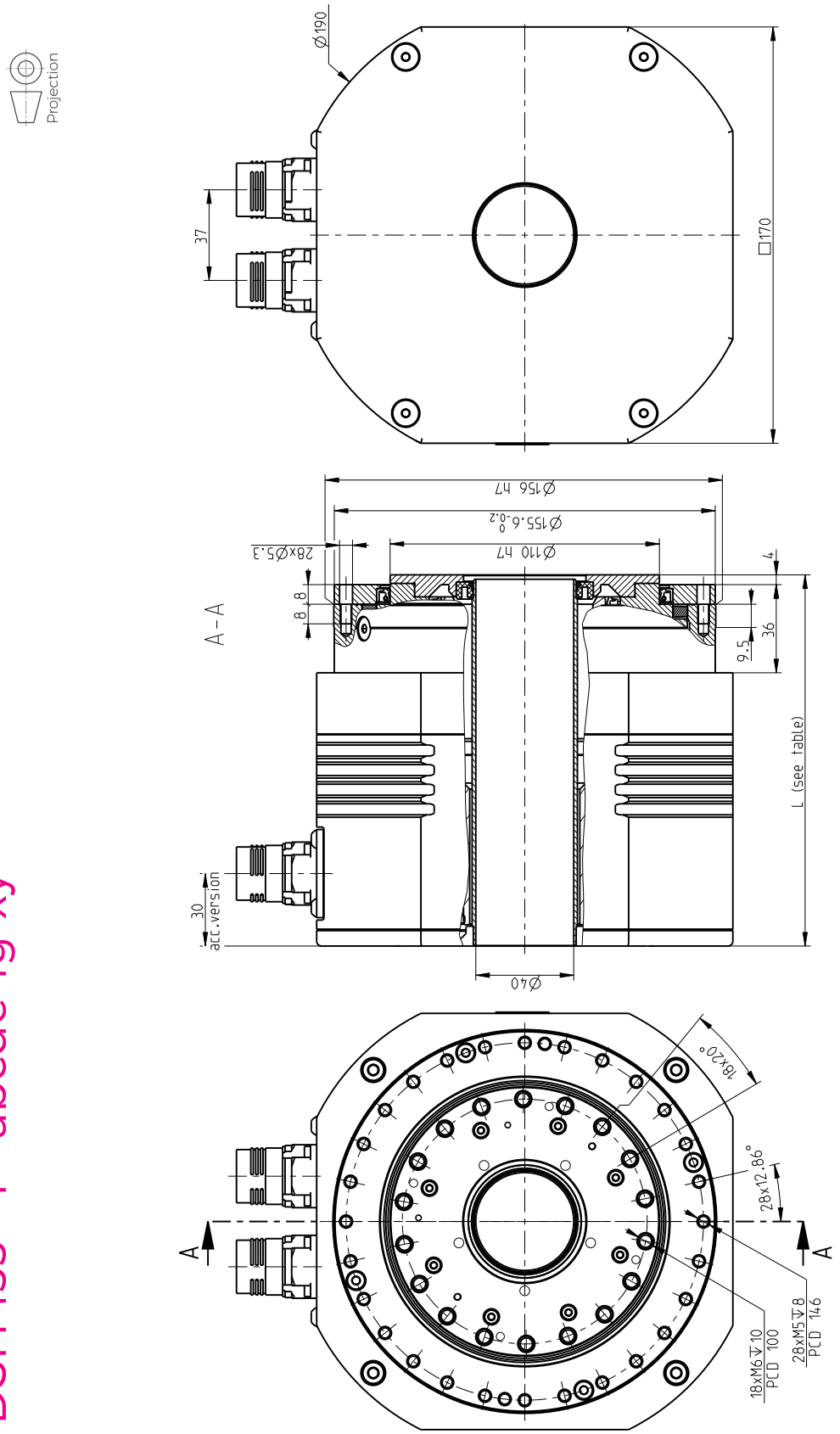

Size	Feedback type (d)	Without brake		With brake	
		Dimension L ± 0.5 [mm]	Weight m [kg] *	Dimension L ± 0.5 [mm]	Weight m [kg] *
DSH 155	OA	152	13.1	175	14.3
	OB	152	11.8	175	13.0
	OD.OE	152	11.6	175	13.7
	OF	152	11.6s	175	13.7

SPINEA BY TIMKEN

Courtesy of Steven Engineering, Inc - (800) 258-9200 - sales@steveneng.com - www.stevenengineering.com

DSH 170 - i - abcde-fg-xy

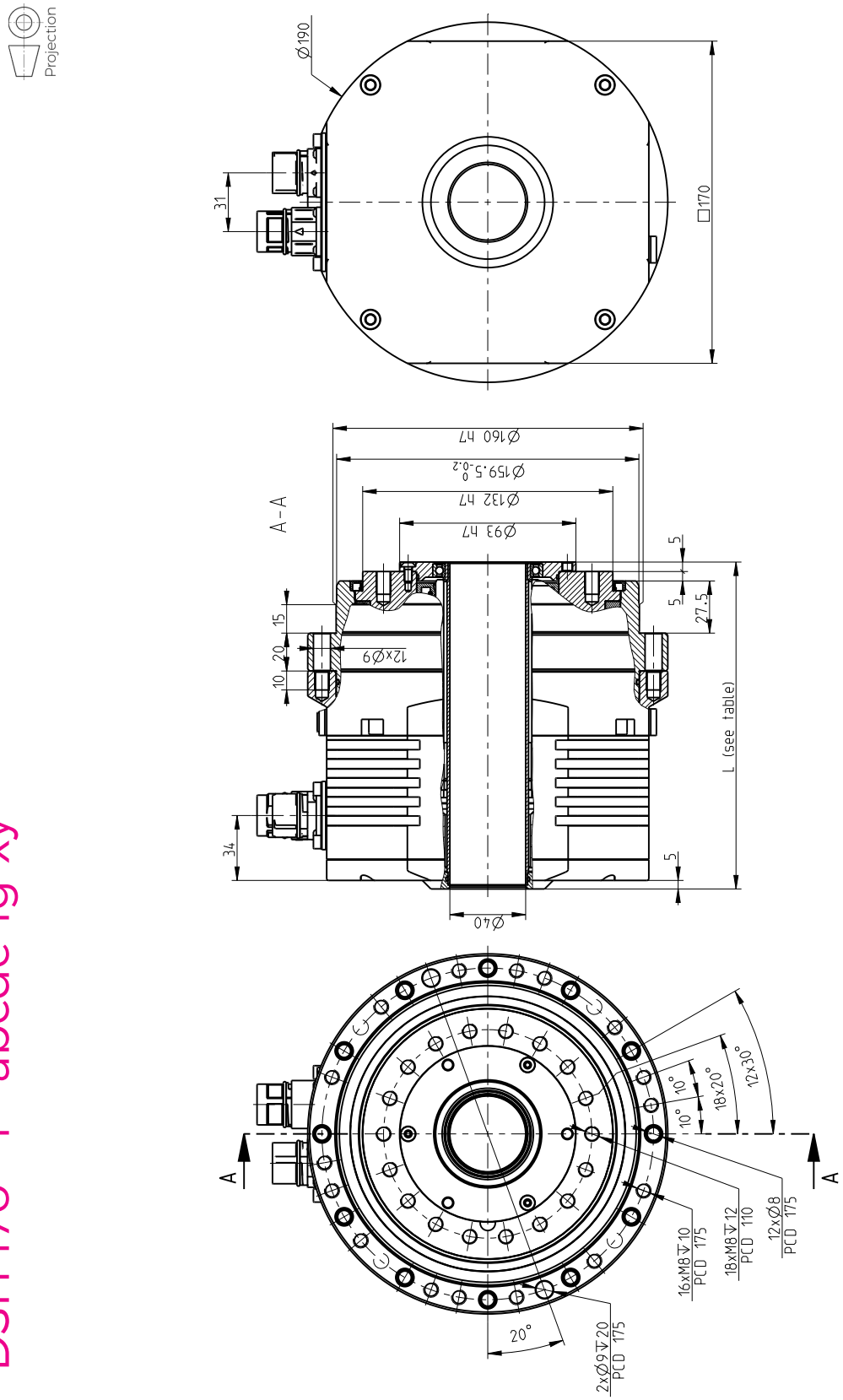

Size	Feedback type (d)	Without brake		With brake	
		Dimension L ± 0.5 [mm]	Weight m [kg] *	Dimension L ± 0.5 [mm]	Weight m [kg] *
DSH 170	OA	188	26.0	235	27.0
	OB,OC	172	24.5	219	25.5
	OD,OE	172	24.0	219	25.0
	ON	172	22.0	219	23.0

DSH 170 – i – abcde-fg-xy

SPINEA BY TIMKEN
Courtesy of Steven Engineering, Inc - (800) 258-9200 - sales@steveneng.com - www.stevenengineering.com

Tab. 8.2b: DSH series technical data table

Reduction Gear parameters		Tolerance	DSH 050		
Reduction ratio	i		63		
Hollow shaft diameter	Ød [mm]		8 [14]		
Rated output torque	T_R [Nm]		18		
Acceleration/braking output torque	T_{acc} [Nm]		36		
Rated input speed	n_r [rpm]		2 000		
Maximum allowable input speed [9]	n_{max} [rpm]		5 000		
Allowable moment [2][3]	M_{cmax} [Nm]		44		
Tilting stiffness [1][6]	M_t [Nm/arcmin]		4		
Torsional stiffness [1][7]	k_t [Nm/arcmin]		2.5		
Lost motion	LM [arcmin]		< 1.5		
Hysteresis	H [arcmin]		< 1.5		
Rated radial force [2]	F_{rR} [kN]		1.44 [8]		
Maximum axial force [2][4]	$F_{a\,max}$ [kN]		1.9		
Gear lubrication			Grease Castrol TRIBOL GR TT 1 PD		
Reduction gear limit temperature	[°C]		60 °C		
Standard ambient temperature range	[°C]		-10 °C to +40 °C		
Motor parameters					
DC BUS voltage	U_{dc} [V_{dc}]	+/- 10%	24	320	560
Motor rated speed	n_n [rpm]		3 500	3 500	3 500
Motor rated torque	M_n [Nm]	+/- 10%	0.23	0.23	0.23
Motor rated current	I_n [A_{rms}]		7.1	0.58	0.58
Motor stall torque	M_o [Nm]	+/- 10%	0.24	0.24	0.24
Motor stall current	I_o [A_{rms}]		7.4	0.6	0.6
Motor peak torque	M_{max} [Nm]	+/- 10%	1	1	1
Motor peak current	I_{max} [A]		30.8	2.5	2.5
Motor back-EMF constant	K_E [V_{peak}/krpm]	+/- 10%	2.7	36	36
Motor torque constant	K_T [Nm/A_{rms}]	+/- 10%	0.032	0.4	0.4
Terminal resistance (L-L)	R_{2ph} [Ω]	+/- 10%	0.2	36	36
Terminal inductance (L-L)	L_{2ph} [mH]	+/- 20%	0.2	36	36
Number of poles	2p		6	6	6
Electromagnetic brake DC supply	[V_{dc}]		24. Special		
Electromagnetic brake torque at input	[Nm]		0.4		
Protection class			IP 64		
Motor Insulation class			F		
Paint			RAL 9005		
Motor number of phases			3		
Motor type of connection			Y(star-configuration)		

1) Mean statistical value
2) Load at output speed 32 rpm for size 050, other sizes at 15 rpm
3) Moment M_c max at F_a=0. If F_a≠0 see Glossary
4) Axial force F_a max for M_c=0 (In case of size 050 also F_r=0 condition has to be met). If M_c≠0 see Glossary
5) 3 900 rpm for ratio 67 ; 4 500 rpm for ratios 89, 119
6) The parameter depends on the high precision reduction gear version.
7) The parameter depends on the version, ratio and lost motion of the high precision reduction gear.
8) For size 050 it is value of MAXIMUM RADIAL FORCE $F_{r\,max}$ for a_2=0; F_a=0 and at 32 rpm output speed. For a_2>0; F_a=0 at 32 rpm output speed $F_{r\,max}$= 0.044/(a_2+0.0305) [kN]. a_2 represents the distance of the radial force centre from the front of the output flange in meters see Glossary.
9) Instantaneous speed peak that may occur within the working cycle. Note please the temperature on the gear case that should not significantly exceed 60°C
10) 3 200 rpm for ratio 69 ; 3 700 rpm for ratio 125
11) 3 800 rpm for ratio 47 ; 4 500 rpm for ratio 85
12) 2 500 rpm for ratio 55 ; 3 400 rpm for ratio 103
13) 2 400 rpm for ratio 49 ; 3 800 rpm for ratio 99
14) Hollow shaft rotates at motor speed

Courtesy of Steven Engineering, Inc - (800) 258-9200 - sales@steveneng.com - www.stevenengineering.com

Tab. 8.2b: DSH series technical data table - continued

DSH 070			DSH 085			DSH 110		
57, 75			47, 85			67, 89, 119		
9 [14] or 12 [14]			14 or 20			12 [14]		
50			41			122		
100			82			244		
2 000			2 000			2000		
5 000			3 800 / 4 500 [11]			3900 / 4500 [5]		
142			220			740		
35			85			150		
7			10			22		
< 1.5			< 1			< 1		
< 1.5			<1			< 1		
2.8			2			9.3		
4.1			6					
Grease Castrol TRIBOL GR TT 1 PD			Grease Castrol TRIBOL GR TT 1 PD			Grease Castrol TRIBOL GR TT 1 PD		
60 °C			60 °C			60 °C		
-10 °C to +40 °C			-10 °C to +40 °C			-10 °C to +40 °C		
24	320	560	24	320	560	24	320	560
2 500	4 500	4 500	2 500	3 000	3 000	2 500	3 000	3 000
0.88	0.76	0.76	2.1	2.1	2.1	3.4	3.2	3.2
13	1.2	0.7	42	4.2	2.1	37	4.9	2.8
0.9	0.9	0.9	2.3	2.3	2.3	3.8	3.8	3.8
13.3	1.42	0.83	46	4.6	2.3	41	6	3
3	3	3	5.8	5.8	5.8	11	11	11
44.3	4.7	2.8	130	13.03	6.52	120	17	10
5.7	68.3	105.6	4.37	49.1	87.4	8	57	103
0.0677	0.63	1.09	0.05	0.5	1	0.09	0.65	1.14
0.13	17	40.5	0.017	2.1	6.7	0.027	1.4	4.5
0.25	34.4	87	0.04	5.2	17	0.15	7.4	24
10	10	10	16	16	16	10	10	10
24. Special			24. Special			24. Special		
4.5			1.5			4.5		
IP 64			IP 64			IP 64		
F			F			F		
RAL 9005			RAL 9005			RAL 9005		
3			3			3		
Y (star-configuration)			Y (star-configuaration)			Y (star-configuaration)		

IMPORTANT NOTES:

- Load values in the table apply to for the nominal life of L_{10} = 6 000 hours. Service life for average torque T_a and average speed n_a other than T_R ,n_R can be calculated. Please contact manufacturer with estimated duty cycle.
- High precision reduction gears are preffered for intermittent duty cycles (S3-S8); the output speed in an inverted variable. The S1 continuous duty cycle should to be consulted with manufacturer
- Please consult maximum speed in duty cycle with the manufacturer
- The values in the table refer to ambient temperature within 20°C – 25°C
- For ambient temperatures lower than -10°C pre-heating might be considered please consult manufacturer

Courtesy of Steven Engineering, Inc - (800) 258-9200 - sales@steveneng.com - www.stevenengineering.com

Tab. 8.2b: DSH series technical data table - continued

Reduction Gear parameters		Tolerance	DSH 115		
Reduction ratio	i		55, 103		
Hollow shaft diameter	Ød [mm]		32		
Rated output torque	T_R [Nm]		130		
Acceleration/braking output torque	T_{acc} [Nm]		260		
Rated input speed	n_r [rpm]		2 000		
Maximum allowable input speed [9]	n_{max} [rpm]		2 500 / 3 400 [12]		
Allowable moment [2][3]	M_{cmax} [Nm]		550		
Tilting stiffness [1][6]	M_t [Nm/arcmin]		220		
Torsional stiffness [1][7]	k_t [Nm/arcmin]		23		
Lost motion	LM [arcmin]		< 1		
Hysteresis	H [arcmin]		< 1		
Rated radial force [2]	F_{rR} [kN]		4		
Maximum axial force [2][4]	$F_{a\,max}$ [kN]		12.5		
Gear lubrication			Grease Castrol TRIBOL GR TT 1 PD		
Reduction gear limit temperature	[°C]		60 °C		
Standard ambient temperature range	[°C]		-10 °C to +40 °C		
Motor parameters					
DC BUS voltage	U_{dc} [V_{dc}]	+/- 10%	24	320	560
Motor rated speed	n_n [rpm]		3 500	3 500	3 500
Motor rated torque	M_n [Nm]	+/- 10%	2.9	2.9	2.9
Motor rated current	I_n [A_{rms}]		46	3.5	2
Motor stall torque	M_o [Nm]	+/- 10%	3	3	3
Motor stall current	I_o [A_{rms}]		47.6	3.6	2
Motor peak torque	M_{max} [Nm]	+/- 10%	8.5	8.5	8.5
Motor peak current	I_{max} [A]		135	10.1	5.8
Motor back-EMF constant	K_E [V_{peak}/krpm]	+/- 10%	5.6	75	131
Motor torque constant	K_T [Nm/A_{rms}]	+/- 10%	0.06	0.84	1.47
Terminal resistance (L-L)	R_{2ph} [Ω]	+/- 10%	0.011	2	6
Terminal inductance (L-L)	L_{2ph} [mH]	+/- 20%	0.03	5	16
Number of poles	2p		20	20	20
Electromagnetic brake DC supply	[V_{dc}]		24. Special		
Electromagnetic brake torque at input	[Nm]		5		
Protection class			IP 64		
Motor Insulation class			F		
Paint			RAL 9005		
Motor number of phases			3		
Motor type of connection			Y (star-configuaration)		

1) Mean statistical value
2) Load at output speed 32 rpm for size 050, other sizes at 15 rpm
3) Moment M_c max at F_a=0. If F_a≠0 see Glossary
4) Axial force F_a max for M_c=0 (In case of size 050 also F_r=0 condition has to be met). If M_c≠0 see Glossary
5) 3 900 rpm for ratio 67 ; 4 500 rpm for ratios 89, 119
6) The parameter depends on the high precision reduction gear version.
7) The parameter depends on the version, ratio and lost motion of the high precision reduction gear.
8) For size 050 it is value of MAXIMUM RADIAL FORCE $F_{r\,max}$ for a_2=0; F_a=0 and at 32 rpm output speed. For a_2>0; F_a=0 at 32 rpm output speed $F_{r\,max}$= 0.044/(a_2+0.0305) [kN]. a_2 represents the distance of the radial force centre from the front of the output flange in meters see Glossary.
9) Instantaneous speed peak that may occur within the working cycle. Note please the temperature on the gear case that should not significantly exceed 60°C
10) 3 200 rpm for ratio 69 ; 3 700 rpm for ratio 125
11) 3 800 rpm for ratio 47 ; 4 500 rpm for ratio 85
12) 2 500 rpm for ratio 55 ; 3 400 rpm for ratio 103
13) 2 400 rpm for ratio 49 ; 3 800 rpm for ratio 99
14) Hollow shaft rotates at motor speed

SPINEA BY TIMKEN

Courtesy of Steven Engineering, Inc - (800) 258-9200 - sales@steveneng.com - www.stevenengineering.com

Tab. 8.2b: DSH series technical data table - continued

DSH 125			DSH 155			DSH 170		
49, 99			109			69, 125		
27			40			40		
180			260			420		
450			650			825		
2 000			2 000			2 000		
2 400 / 3 800 [13]			3 000			3 200 / 3 700 [10]		
880			1 640			2 000		
280			900			1 100		
29			67			110		
< 1			< 1			< 1		
< 1			< 1			< 1		
4.4			8			19.2		
13.8			26			27.9		
Grease Castrol TRIBOL GR TT 1 PD			Grease Castrol TRIBOL GR TT 1 PD			Grease Castrol TRIBOL GR TT 1 PD		
60 °C			60 °C			60 °C		
-10 °C to +40 °C			-10 °C to +40 °C			-10 °C to +40 °C		
24	320	560	24	320	560	24	320	560
4 000	4 000	4 000	4 000	4 000	4 000	2 000	4 000	4 000
4	4	4	3.8	3.8	3.8	9	5	5
74.1	5.6	3.2	67.2	5	3	114,5	10	6
4.5	4.5	4.5	5	5	5	11	11	11
83.3	6.3	3.6	88	6.6	4	140	22	13.2
13.5	13.5	13.5	16	16	16	23	23	23
250	18.8	11	283	21.2	14	307	46	27,6
4.76	63	111	5	67	112	6,7	44	77
0.054	0.72	1.26	0.057	0.75	1.27	0,079	0,5	0,83
0.0055	1	3.3	0.005	1	2.5	0,004	0,15	0,4
0.04	7	22	0.014	2	7	0.0128	0,57	1,7
10	10	10	24	24	24	24	24	24
24, Special			24, Special			24, Special		
5			5			19		
IP 64			IP 64			IP 64		
F			F			F		
RAL 9005			RAL 9005			RAL 9005		
3			3			3		
Y (star-configuration)			Y (star-configuration)			Y (star-configuration)		

IMPORTANT NOTES:

- Load values in the table apply to for the nominal life of L_{10} = 6 000 hours. Service life for average torque T_a and average speed n_a other than T_R ,n_R can be calculated. Please contact manufacturer with estimated duty cycle.
- High precision reduction gears are preffered for intermittent duty cycles (S3-S8); the output speed in an inverted variable. The S1 continuous duty cycle should to be consulted with manufacturer
- Please consult maximum speed in duty cycle with the manufacturer
- The values in the table refer to ambient temperature within 20°C – 25°C
- For ambient temperatures lower than -10°C pre-heating might be considered please consult manufacturer

Courtesy of Steven Engineering, Inc - (800) 258-9200 - sales@steveneng.com - www.stevenengineering.com

Tab. 8.2c: Inertia at input (DSH actuator without brake)

Feedback type (d)	$J_{w/o\ brake}$	DSH 050	DSH 070	DSH 085	DSH 110	DSH 115	DSH 125	DSH 155	DSH 170
0A	10^{-4} kgm²	0.110	0.630	1.960	2.040	13.977	14.516	19.340	57.987
0B	10^{-4} kgm²	–	0.483	1.840	–	8.757	9.336	10.600	34.490
0C	10^{-4} kgm²	–	0.483	1.840	–	8.757	9.336	10.600	34.430
0D	10^{-4} kgm²	–	–	2.360	–	9.097	9.636	10.460	34.790
0E	10^{-4} kgm²	–	–	2.360	–	9.097	9.636	10.460	34.790
0F	10^{-4} kgm²	–	–	–	–	9.097	9.636	10.460	34.790
0J	10^{-4} kgm²	0.091	–	–	–	–	–	–	–
0N	10^{-4} kgm²	0.105	–	2.060	–	–	10.624	–	34.101

Tab. 8.2d: Inertia at input (DSH actuator with brake)

Feedback type (d)	$J_{w\ brake}$	DSH 050	DSH 070	DSH 085	DSH 110	DSH 115	DSH 125	DSH 155	DSH 170
0A	10^{-4} kgm²	0.143	–	2.380	–	15.080	15.937	24.428	72.253
0B	10^{-4} kgm²	–	–	2.200	–	9.860	15.757	15.249	47.734
0C	10^{-4} kgm²	–	–	2.200	–	9.860	10.757	15.249	47.674
0D	10^{-4} kgm²	–	–	2.810	–	10.200	11.057	15.550	48.034
0E	10^{-4} kgm²	–	–	2.810	–	10.200	11.057	15.550	48.034
0F	10^{-4} kgm²	–	–	–	–	10.200	11.057	15.550	48.034
0J	10^{-4} kgm²	0.125	–	–	–	–	–	–	–
0N	10^{-4} kgm²	0.138	–	2.520	–	–	12.044	–	47.346

SPINEA BY TIMKEN

Courtesy of Steven Engineering, Inc - (800) 258-9200 - sales@steveneng.com - www.stevenengineering.com

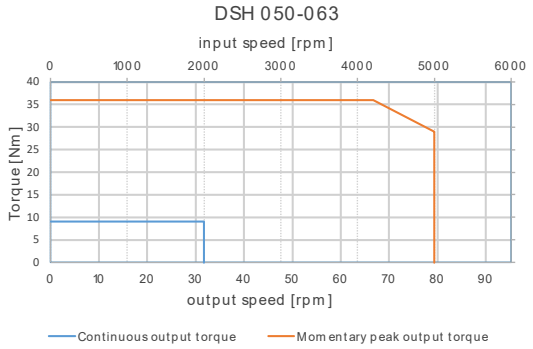

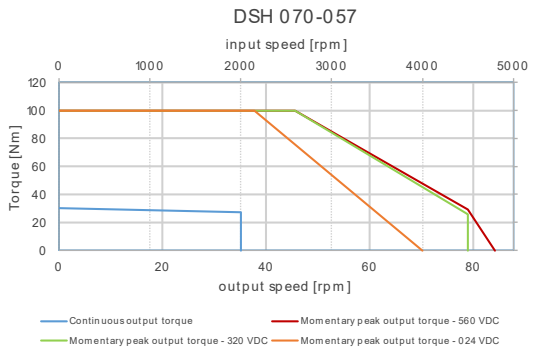

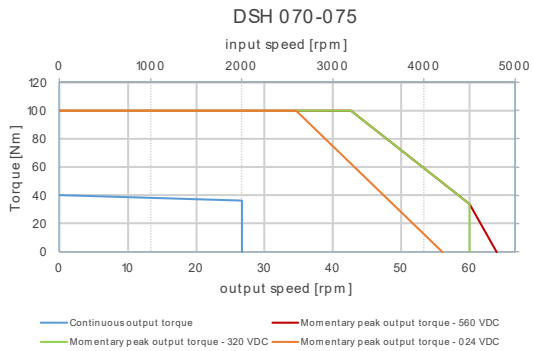

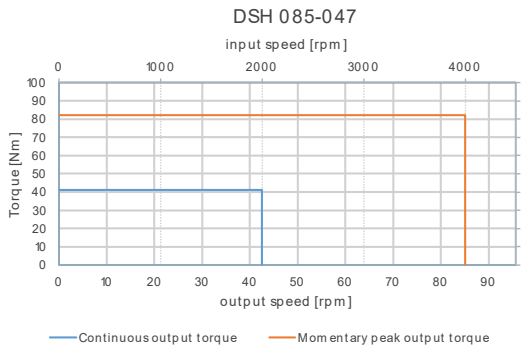

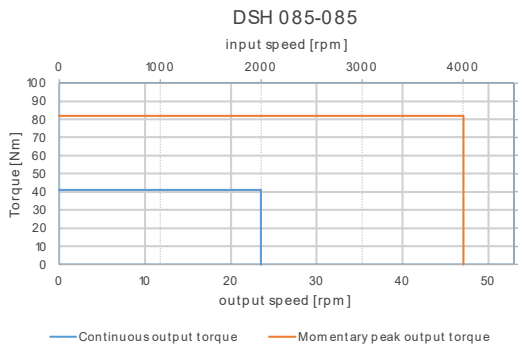

Courtesy of Steven Engineering, Inc - (800) 258-9200 - sales@steveneng.com - www.stevenengineering.com

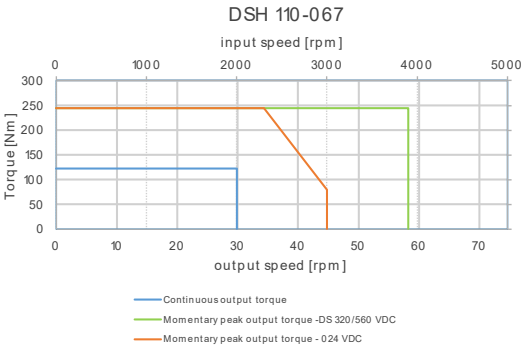

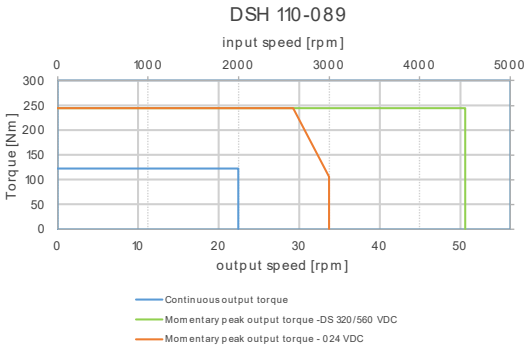

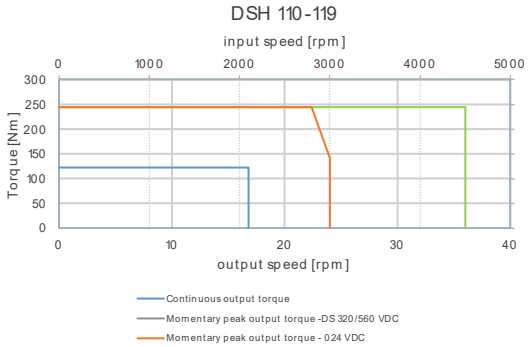

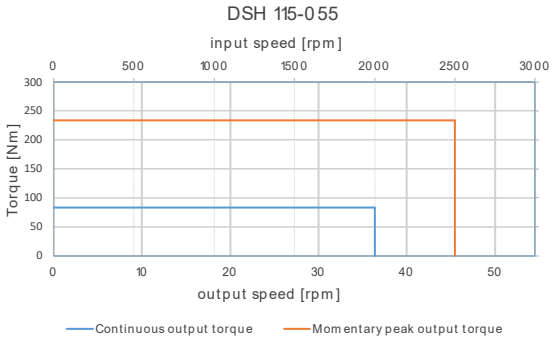

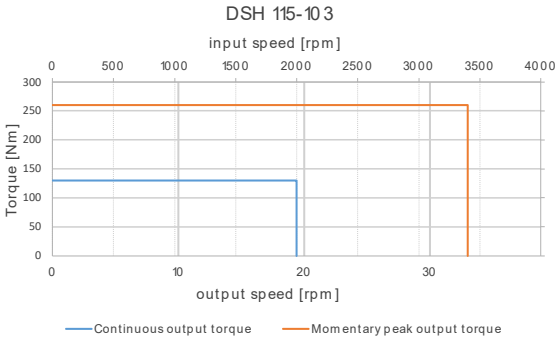

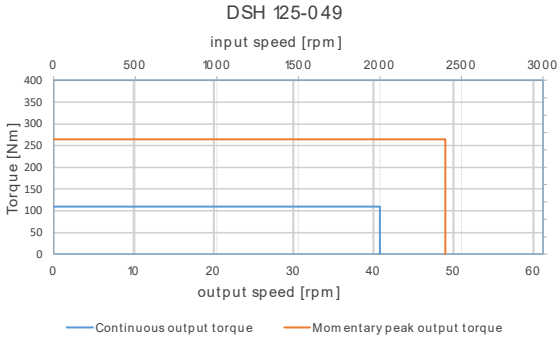

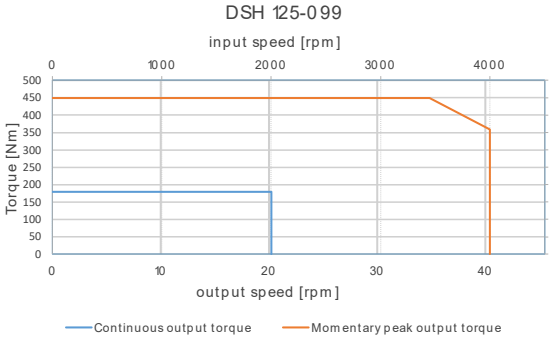

SPINEA BY TIMKEN
Courtesy of Steven Engineering, Inc - (800) 258-9200 - sales@steveneng.com - www.stevenengineering.com

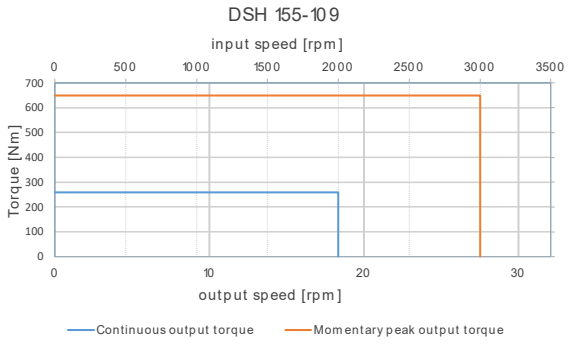

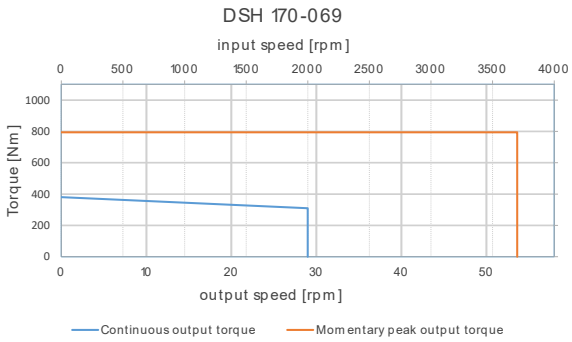

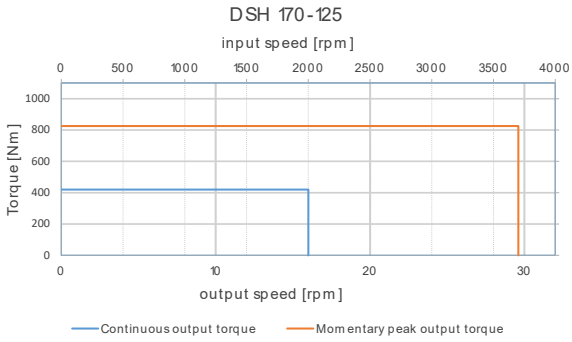

Courtesy of Steven Engineering, Inc - (800) 258-9200 - sales@steveneng.com - www.stevenengineering.com

Courtesy of Steven Engineering, Inc - (800) 258-9200 - sales@steveneng.com - www.stevenengineering.com

DriveSpin®

MODULAR

DriveSpin® **DSM** SERIES IS EXCELLENT IN BOTH ROTARY MANIPULATORS AND MANY OTHERS

Courtesy of Steven Engineering, Inc - (800) 258-9200 - sales@steveneng.com - www.stevenengineering.com

8.3 DSM series

Advantages

- **low lost motion**
- **low moment of inertia**
- **high reduction ratio**
- **high kinematic accuracy**
- **high moment overload capacity**
- **high capacity of the integrated radial-axial output bearings**
- **high dynamic performance**

The **Drive**Spin® **DSM** modular rotary positioning modules provide for controlled rotary motion and transfer of torque with a high positioning accuracy and precision. The output flange of the module allows capturing both radial and axial forces. The modules feature a special design, which allows versatile connections, also without additional devices. Actuators can be combined in many ways using the modular system. The simple design integration ability and small dimensions allow to create kinematic assemblies from DSM modules for end effectors, but also for additional devices and positioners. Selection of a module size depends on the required load-carrying capacity and the number of the motion axis degrees of freedom. The DSM Series is characterized by simple and quick assembly and reduces overall cost. Compact design ensures optimum mounting options and application possibilities, even in confined installation spaces. These actuators are used in applications that require high torque density, precision and dynamics. Rated output torque is within 18 Nm – 122 Nm.

SPINEA BY TIMKEN
Courtesy of Steven Engineering, Inc - (800) 258-9200 - sales@steveneng.com - www.stevenengineering.com

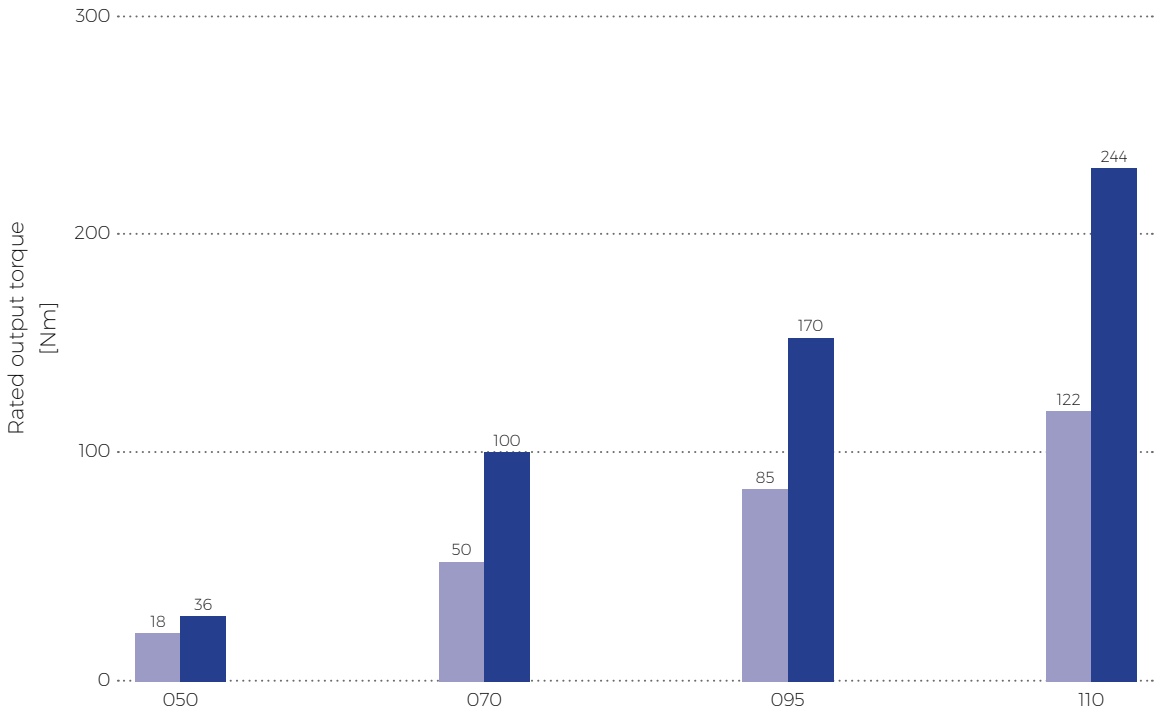

Tab. 8.3a: Rated output torque

Size		050	070	095	110
Rated output torque	T_R [Nm]	18	50	85	122
Acceleration/ braking output torque	T_{acc} [Nm]	36	100	170	244

Courtesy of Steven Engineering, Inc - (800) 258-9200 - sales@steveneng.com - www.stevenengineering.com

DSM 050 - i - abcde-fg-xy

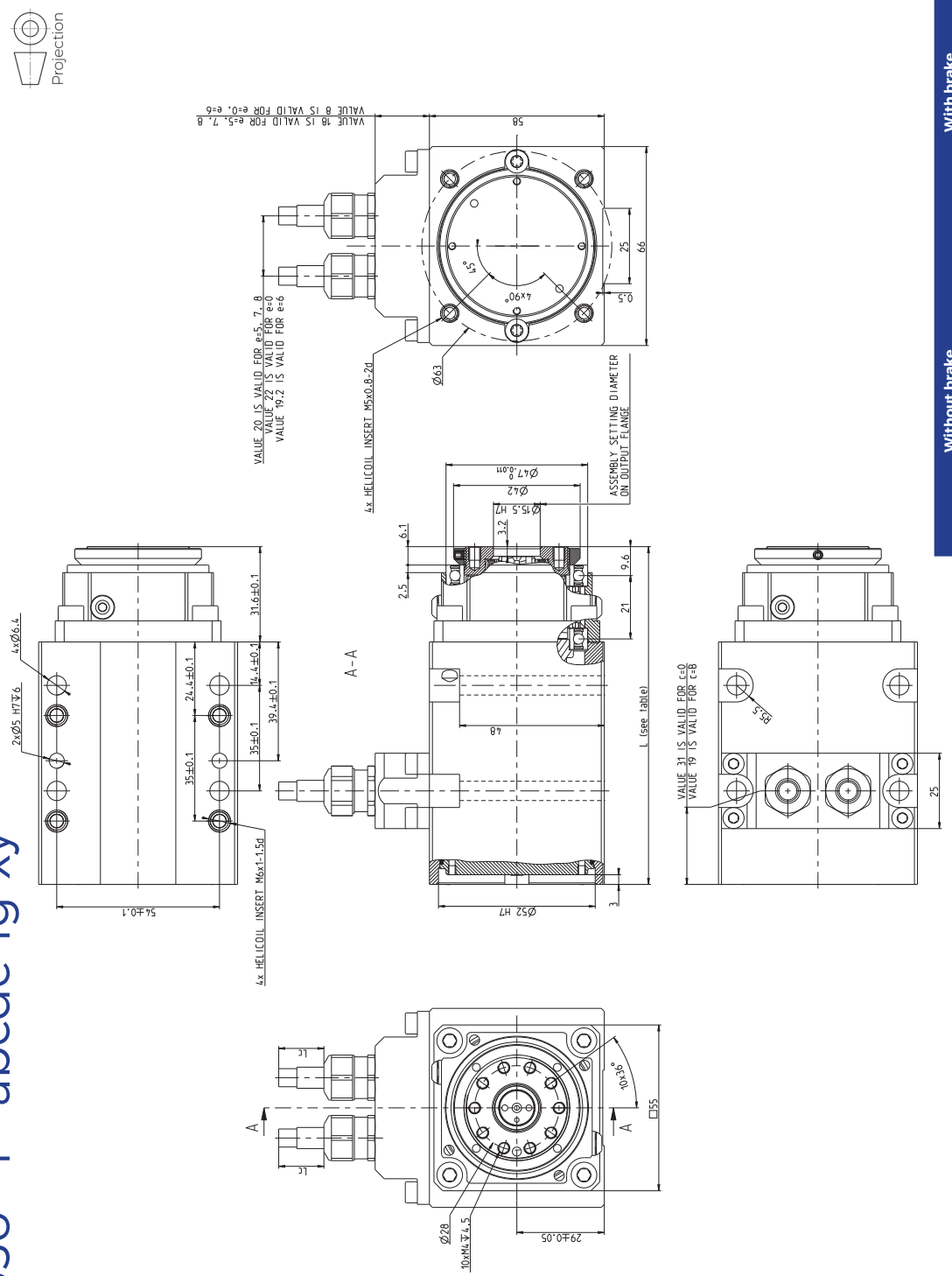

Size	Feedback type (d)	Without brake		With brake	
		Dimension L ± 0.5 [mm]	Weight m [kg] *	Dimension L ± 0.5 [mm]	Weight m [kg] *
DSM 050	OA	112	1.4	142	1.6
	OB,OC	112	1.4	142	1.6
	OD,OE	112	1.4	142	1.6
	OK,OL	119	1.4	152	1.6

DSM 050 – i – abcde-fg-xy

SPINEA BY TIMKEN

Courtesy of Steven Engineering, Inc - (800) 258-9200 - sales@steveneng.com - www.stevenengineering.com

DSM 070 - i - abcde-fg-xy

DSM 070 – i – abcde-fg-xy

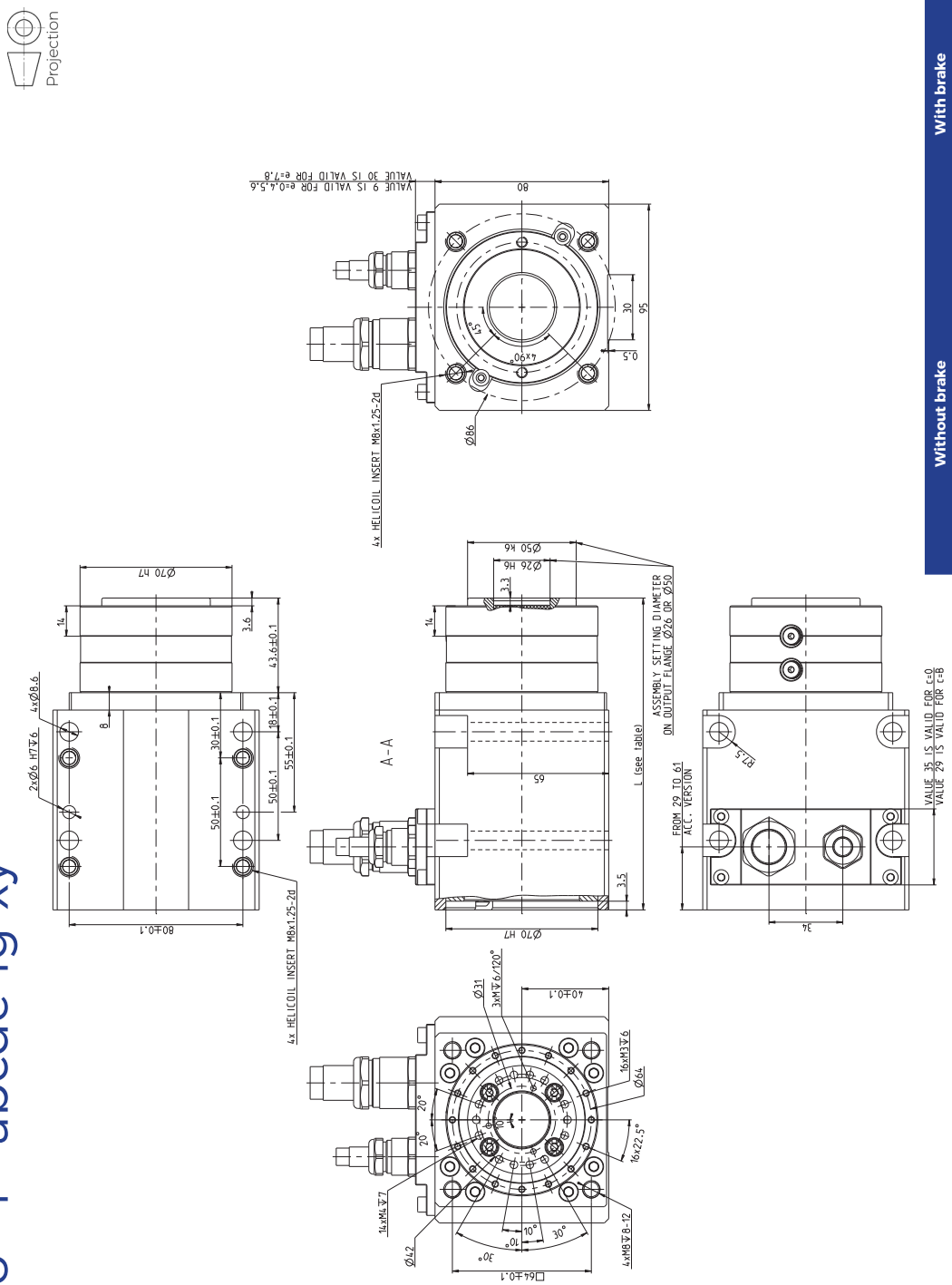

Size	Feedback type (d)	Without brake		With brake	
		Dimension L ± 0.5 [mm]	Weight m [kg] *	Dimension L ± 0.5 [mm]	Weight m [kg] *
DSM 070	OA	144	3.2	177	4.2
	OB,OC	144	3.2	177	4.8
	OD,OE	144	3.1	177	4.1
	OH	154	3.4	199	4.6

Courtesy of Steven Engineering, Inc - (800) 258-9200 - sales@steveneng.com - www.stevenengineering.com

DSM 095 - i - abcde-fg-xy

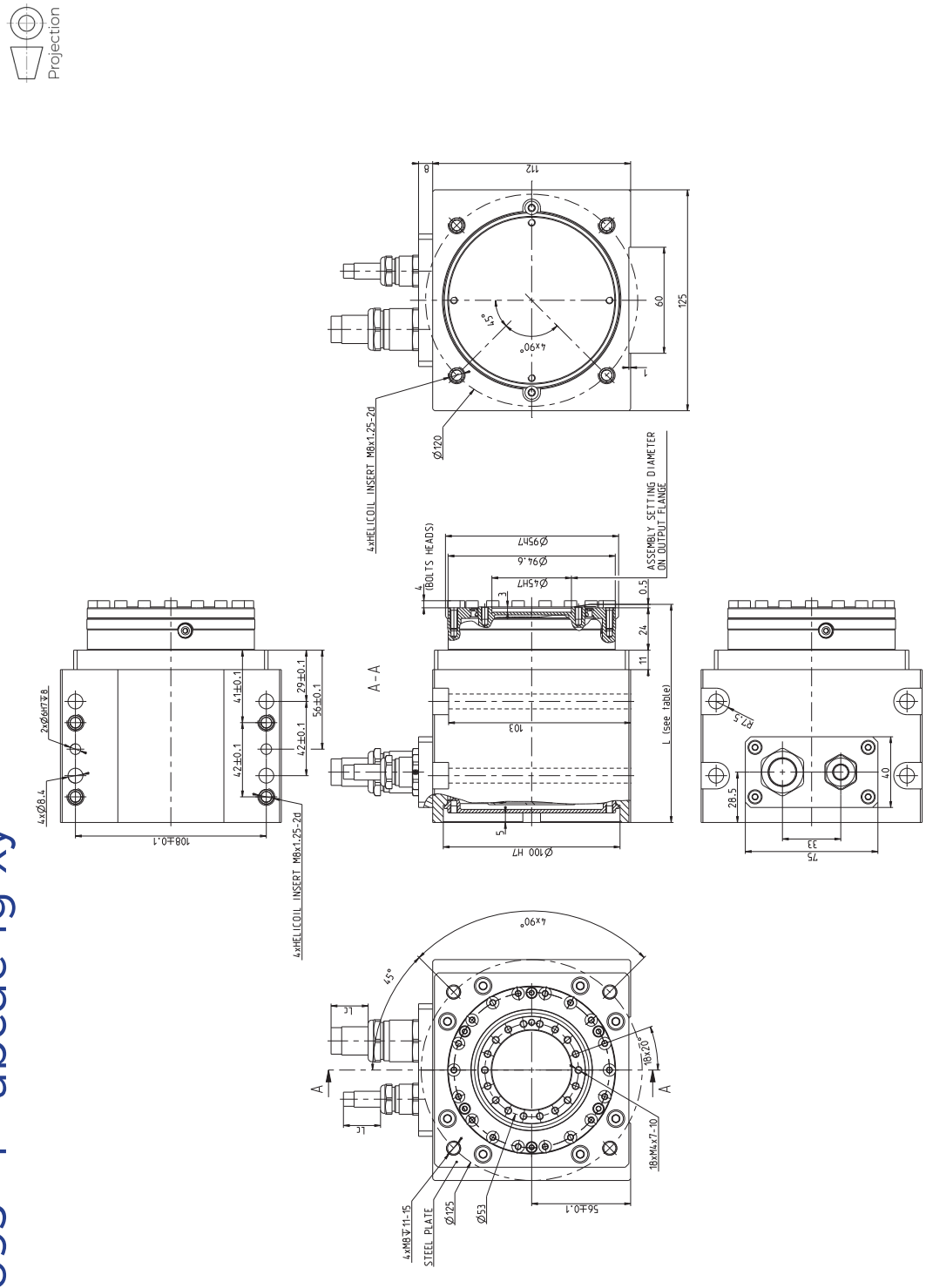

Size	Feedback type (d)	Without brake		With brake	
		Dimension L ± 0.5 [mm]	Weight m [kg] *	Dimension L ± 0.5 [mm]	Weight m [kg] *
DSM 095	OA	122	5.9	145	6.5
	OB,OC	122	6.1	145	6.6
	OD,OE	122	6.0	145	6.7
	OG,OH,OF	142	6.6	165	7.3

SPINEA BY TIMKEN

Courtesy of Steven Engineering, Inc - (800) 258-9200 - sales@steveneng.com - www.stevenengineering.com

DSM 110 - i - abcde-fg-xy

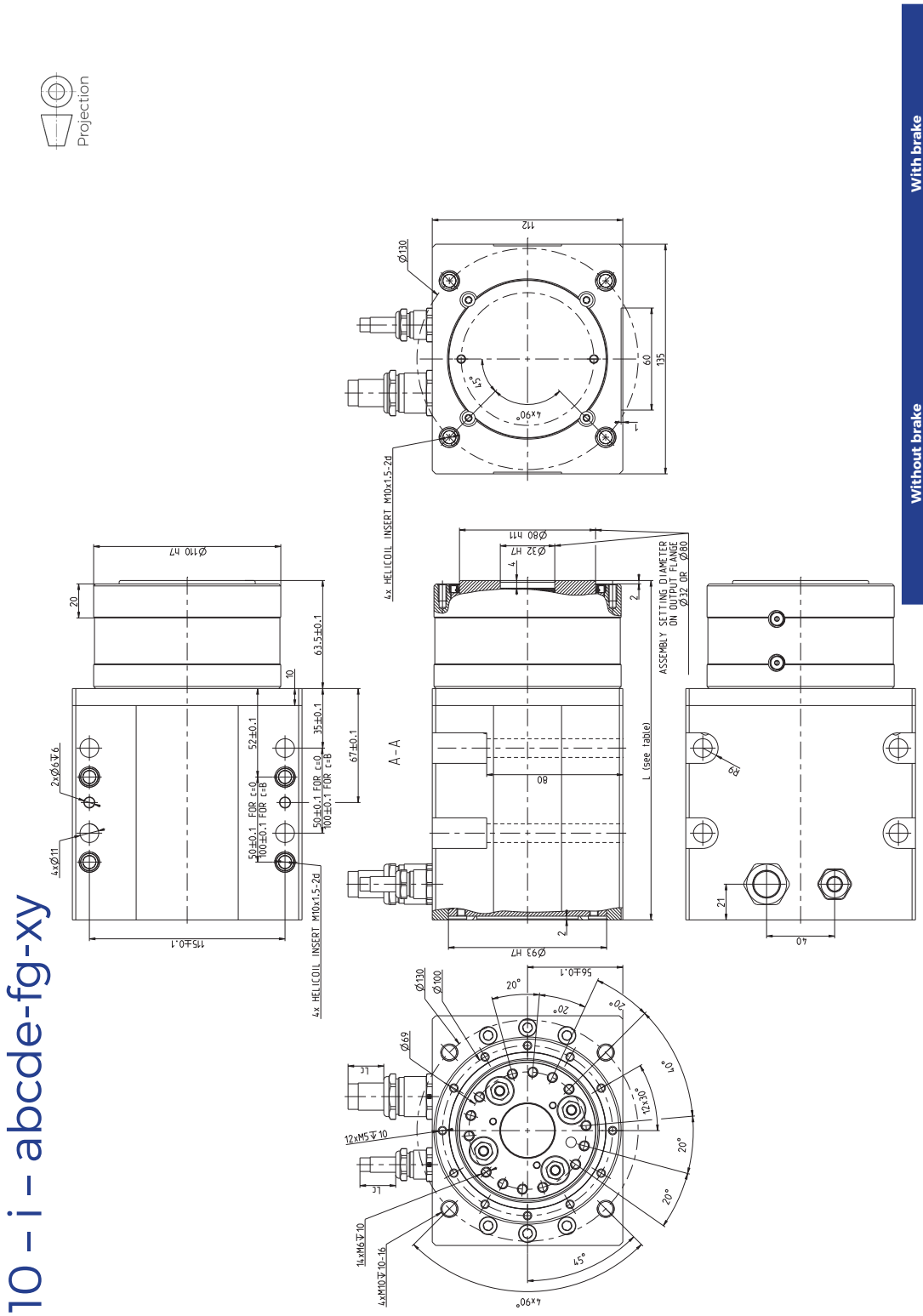

Size	Feedback type (d)	Without brake		With brake	
		Dimension L ± 0.5 [mm]	Weight m [kg] *	Dimension L ± 0.5 [mm]	Weight m [kg] *
DSM 110	OA	200	10.5	252	12.4
	OB,OC	200	10.5	252	12.4
	OD,OE	200	10.6	252	12.5
	OH	200	10.6	252	12.5

Courtesy of Steven Engineering, Inc - (800) 258-9200 - sales@steveneng.com - www.stevenengineering.com

Tab. 8.3b: DSM series technical data table

Reduction Gear parameters		Tolerance	DSM 050		
Reduction ratio	i		63		
Rated output torque	T_R [Nm]		18		
Acceleration/braking output torque	T_{acc} [Nm]		36		
Rated input speed	n_r [rpm]		2 000		
Maximum allowable input speed [9]	n_{max} [rpm]		5 000		
Allowable moment [2][3]	M_{cmax} [Nm]		44		
Tilting stiffness [1][6]	M_t [Nm/arcmin]		4		
Torsional stiffness [1][7]	k_t [Nm/arcmin]		2.5		
Lost motion	LM [arcmin]		< 1.5		
Hysteresis	H [arcmin]		< 1.5		
Rated radial force [2]	F_{rR} [kN]		1.44 [8]		
Maximum axial force [2][4]	$F_{a\,max}$ [kN]		1.9		
Gear lubrication			Grease Castrol TRIBOL GR TT 1 PD		
Reduction gear limit temperature	[°C]		60 °C		
Standard ambient temperature range	[°C]		-10 °C to +40 °C		
Motor parameters					
DC BUS voltage	U_{dc} [V_{dc}]	+/- 10%	24	320	560
Motor rated speed	n_n [rpm]		3 500	3 500	3 500
Motor rated torque	M_n [Nm]	+/- 10%	0.23	0.23	0.23
Motor rated current	I_n [A_{rms}]		7.1	0.58	0.58
Motor stall torque	M_o [Nm]	+/- 10%	0.24	0.24	0.24
Motor stall current	I_o [A_{rms}]		7.4	0.6	0.6
Motor peak torque	M_{max} [Nm]	+/- 10%	1	1	1
Motor peak current	I_{max} [A]		30.8	2.5	2.5
Motor back-EMF constant	K_E [V_{peak}/krpm]	+/- 10%	2.7	36	36
Motor torque constant	K_T [Nm/A_{rms}]	+/- 10%	0.032	0.4	0.4
Terminal resistance (L-L)	R_{2ph} [Ω]	+/- 10%	0.2	36	36
Terminal inductance (L-L)	L_{2ph} [mH]	+/- 20%	0.2	36	36
Number of poles	2p		6	6	6
Electromagnetic brake DC supply	[V_{dc}]		24, Special		
Electromagnetic brake torque at input	[Nm]		0.4		
Protection class			IP 64		
Motor Insulation class			F		
Paint			RAL 9005		
Motor number of phases			3		
Motor type of connection			Y(star-configuration)		

1) Mean statistical value
2) Load at output speed 32 rpm for size 050, other sizes at 15 rpm
3) Moment M_c max at F_a=0. If F_a≠0 see Glossary
4) Axial force F_a max for M_c=0 (In case of size 050 also F_r=0 condition has to be fullfiled). If M_c≠0 see Glossary
5) 3 900 rpm for ratio 67 ; 4 500 rpm for ratios 89, 119
6) The parameter depends on the high precision reduction gear version.
7) The parameter depends on the version, ratio and lost motion of the high precision reduction gear.
8) For size 050 it is value of MAXIMUM RADIAL FORCE $F_{r\,max}$ for a_2=0; F_a=0 and at 32 rpm output speed. For a_2>0; F_a=0 at 32 rpm output speed $F_{r\,max}$= 0.044/(a_2+0.0305) [kN]. a_2 represents the distance of the radial force centre from the front of the output flange in meters see Glossary.
9) Instantaneous speed peak that may occur within the working cycle. Note please the temperature on the gear case that should not significantly exceed 60°C
10) 4 500 rpm for ratio 73 ; 4 800 rpm for ratio 95

SPINEA BY TIMKEN

Courtesy of Steven Engineering, Inc - (800) 258-9200 - sales@steveneng.com - www.stevenengineering.com

Tab. 8.3b: DSM series technical data table - continued

DSM 070			DSM 095			DSM 110		
57, 75			73, 95			67, 89, 119		
50			85			122		
100			170			244		
2 000			2 000			2 000		
5 000			4 500 / 4 800 [10]			3 900 / 4 500 [5]		
142			410			740		
35			120			150		
7			15			22		
< 1.5			< 1			< 1		
< 1.5			< 1			< 1		
2.8			3.5			9.3		
4.1			11.1			13.1		
Grease Castrol TRIBOL GR TT 1 PD			Grease Castrol TRIBOL GR TT 1 PD			Grease Castrol TRIBOL GR TT 1 PD		
60 °C			60 °C			60 °C		
-10 °C to +40 °C			-10 °C to +40 °C			-10 °C to +40 °C		
24	320	560	24	320	560	24	320	560
2 500	4 500	4 500	4 000	4 000	4 000	2 500	3 000	3 000
0.88	0.76	0.76	1.4	1.4	1.4	3.4	3.2	3.2
13	1.2	0.7	27	5.6	3.1	37	4.9	2.8
0.9	0.9	0.9	1.6	1.6	1.6	3.8	3.8	3.8
13.3	1.42	0.83	31	6.4	3.5	41	6	3
3	3	3	5.5	5.5	5.5	11	11	11
44.3	4.7	2.8	106.1	22	12.1	120	17	10
5.7	68.3	105.6	4.4	25	47	8	57	103
0.0677	0.63	1.09	0.052	0.25	0.46	0.09	0.65	1.14
0.13	17	40.5	0.052	1.2	4.36	0.027	1.4	4.5
0.25	34.4	87	0.11	2.84	8.71	0.15	7.4	24
10	10	10	10	10	10	10	10	10
24, Special			24, Special			24, Special		
4.5			2			4.5		
IP 64			IP 64			IP 64		
F			F			F		
RAL 9005			RAL 9005			RAL 9005		
3			3			3		
Y(star-configuration)			Y(star-configuration)			Y(star-configuration)		

IMPORTANT NOTES:

- Load values in the table are apply to the nominal life of L_{10} = 6 000 hours. Service life for average torque T_a and average speed n_a other than T_R ,n_R can be calculated. Please contact manufacturer with estimated duty cycle.
- High precision reduction gears are preffered for intermittent duty cycles (S3-S8); output speed in an aplications is inverted variable. The S1 continuous duty cycle should be consulted with manufacturer
- Please consult the maximum speed in duty cycle with the manufacturer
- The values in the table refer to the ambient temperature within 20°C – 25°C
- For ambient temperatures lower than -10°C pre-heating might be considered - please consult manufacturer

Courtesy of Steven Engineering, Inc - (800) 258-9200 - sales@steveneng.com - www.stevenengineering.com

Tab. 8.3c: Inertia at input (DSM actuator without brake)

Feedback type (d)	$J_{w/o\ brake}$	DSM 050	DSM 070	DSM 095	DSM 110
OA	10^{-4} kgm²	0.062	0.420	1.657	1.825
OB	10^{-4} kgm²	0.061	0.487	1.646	1.814
OC	10^{-4} kgm²	0.061	0.487	1.646	1.814
OD	10^{-4} kgm²	0.037	0.416	1.640	1.830
OE	10^{-4} kgm²	0.037	0.416	1.640	1.830
OF	10^{-4} kgm²	–	–	1.661	–
OG	10^{-4} kgm²	–	–	1.661	–
OH	10^{-4} kgm²	–	0.416	1.661	1.830
OK	10^{-4} kgm²	0.060	–	–	–
OL	10^{-4} kgm²	0.060	–	–	–

Tab. 8.3d: Inertia at input (DSM actuator with brake)

Feedback type (d)	$J_{w\ brake}$	DSM 050	DSM 070	DSM 095	DSM 110
OA	10^{-4} kgm²	0.121	0.780	1.707	2.193
OB	10^{-4} kgm²	0.101	0.853	1.695	2.182
OC	10^{-4} kgm²	0.101	0.853	1.695	2.182
OD	10^{-4} kgm²	0.101	0.778	1.689	2.196
OE	10^{-4} kgm²	0.101	0.778	1.689	2.196
OF	10^{-4} kgm²	–	–	1.711	–
OG	10^{-4} kgm²	–	–	1.711	–
OH	10^{-4} kgm²	–	0.778	1.711	2.196
OK	10^{-4} kgm²	0.100	–	–	–
OL	10^{-4} kgm²	0.100	–	–	–

SPINEA BY TIMKEN

Courtesy of Steven Engineering, Inc - (800) 258-9200 - sales@steveneng.com - www.stevenengineering.com

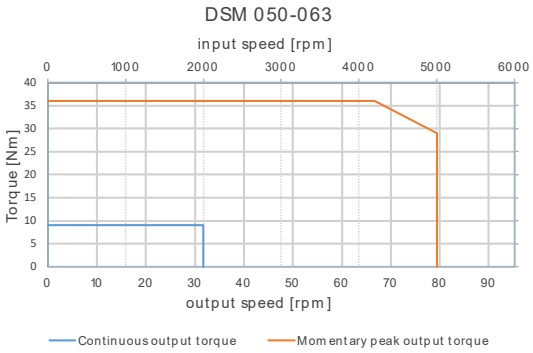

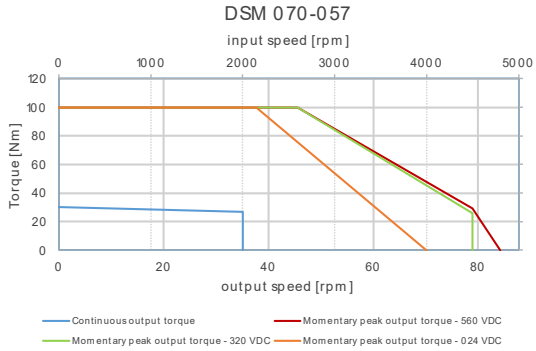

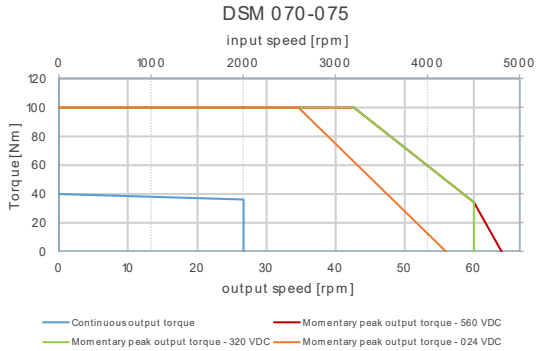

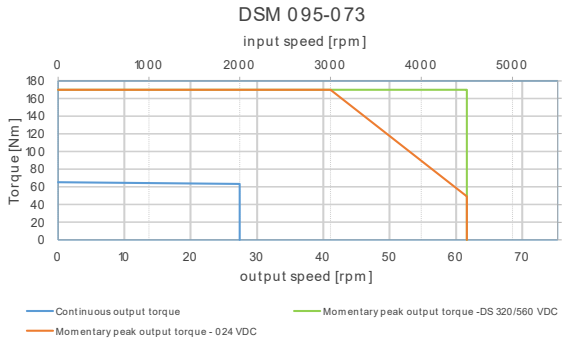

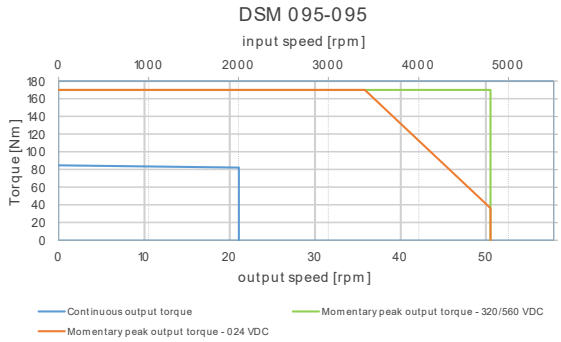

Courtesy of Steven Engineering, Inc - (800) 258-9200 - sales@steveneng.com - www.stevenengineering.com

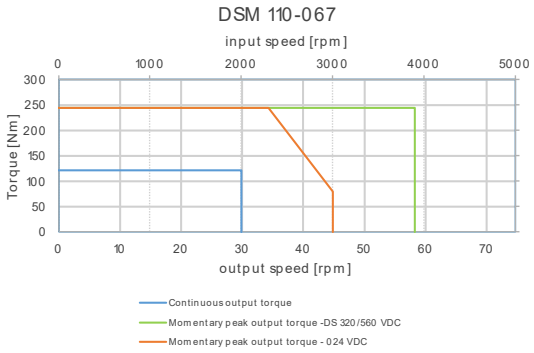

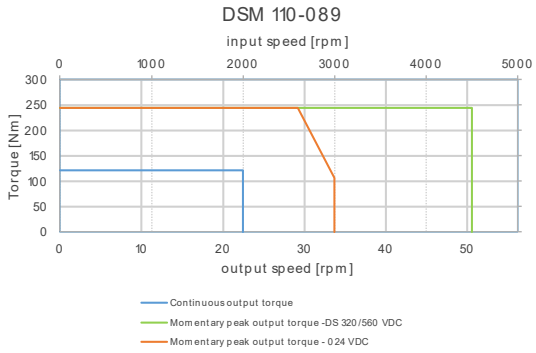

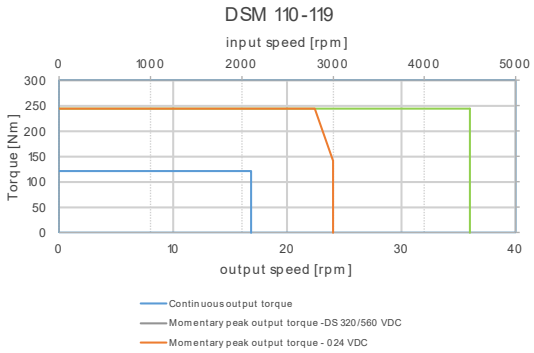

SPINEA BY TIMKEN
Courtesy of Steven Engineering, Inc - (800) 258-9200 - sales@steveneng.com - www.stevenengineering.com

DriveSpin®

DSF SERIES

FLAT

DriveSpin® **DSF** SERIES IS EXCELLENT
IN BOTH EXOSKELETONS
AND MANY OTHERS

Courtesy of Steven Engineering, Inc - (800) 258-9200 - sales@steveneng.com - www.stevenengineering.com

8.4 DSF series

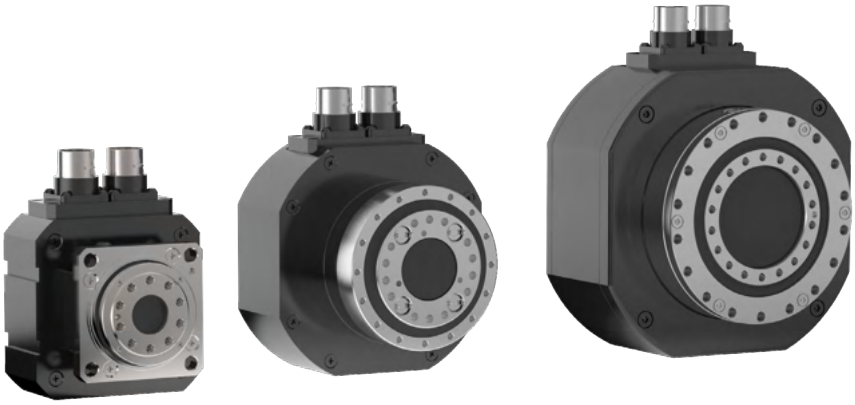

Advantages

- **low mass**
- **compact design**
- **extremely short axial length**
- **high torque density**
- **high dynamic performance**
- **high moment overload capacity**

The **Drive**Spin® **DSF** "flat" series of electric actuators is characterized by the extremely short axial length with focus on maintaining the key features of the DriveSpin®. The DSF series was designed to be the most compact solution with very low mass and small dimensions. The DS "Flat" series consists of TwinSpin® reduction gear, servomotor and various feedback systems aimed at ensuring full compatibility with customer requirements. The TwinSpin® reduction gear used in DSF actuators ensures high accuracy, positioning repeatability, torsional stiffness as well as high carrying load due to the implemented bearing systems. Rated torque range of the DSF series varies within 12Nm – 85 Nm.

SPINEA BY TIMKEN
Courtesy of Steven Engineering, Inc - (800) 258-9200 - sales@steveneng.com - www.stevenengineering.com

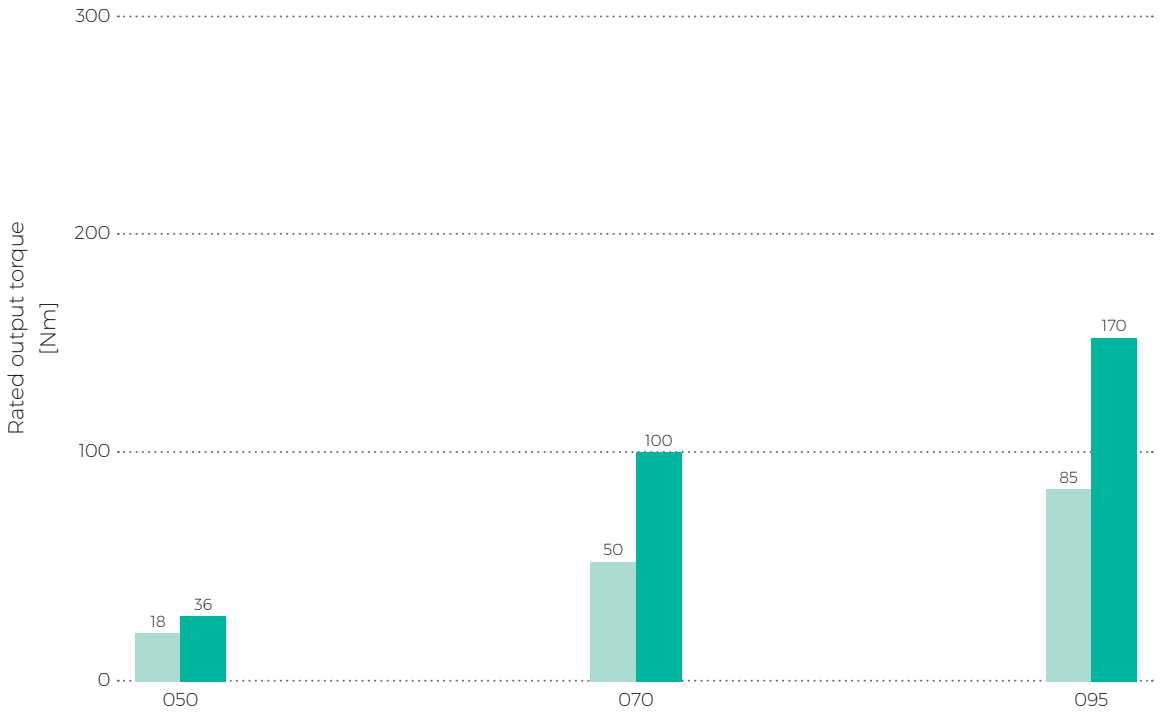

Tab. 8.4.a: Rated output torque

Size		050	070	095
Rated output torque	T_R [Nm]	18	50	85
Acceleration/ braking output torque	T_{acc} [Nm]	36	100	170

Courtesy of Steven Engineering, Inc - (800) 258-9200 - sales@steveneng.com - www.stevenengineering.com

DSF 050 - i - abcde-fg-xy

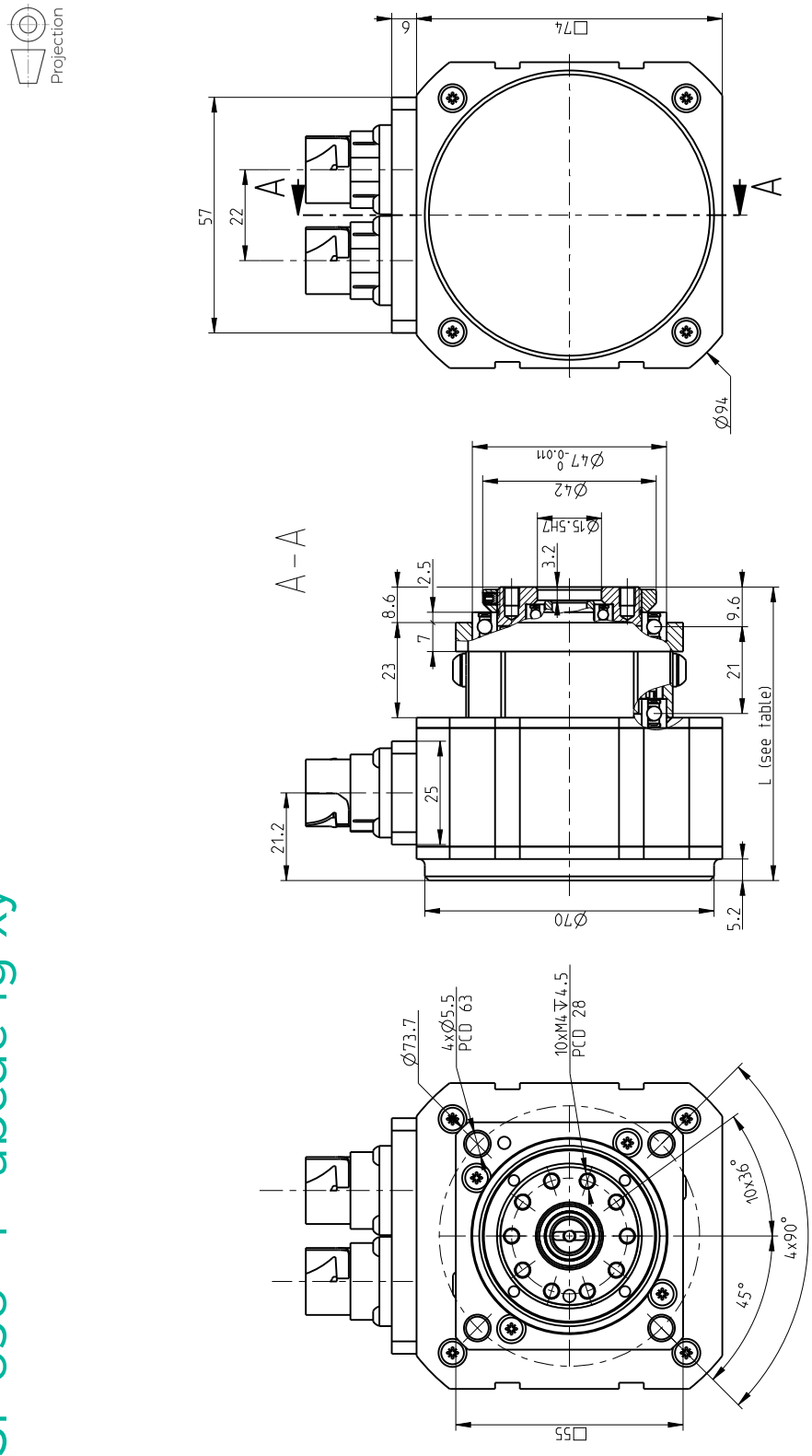

Size	Feedback type (d)	Without brake		With brake	
		Dimension L ± 0.5 [mm]	Weight m [kg] *	Dimension L ± 0.5 [mm]	Weight m [kg] *
DSF 050	OD.OE	71	1.2	94	1.4
	OJ	71	1.2	94	1.4
	ON	71	1.2	94	1.4

DSF 050 – i – abcde-fg-xy

SPINEA BY TIMKEN

Courtesy of Steven Engineering, Inc - (800) 258-9200 - sales@steveneng.com - www.stevenengineering.com

DSF 050 – i – abcde-fg-xy

with hollow shaft

Projection

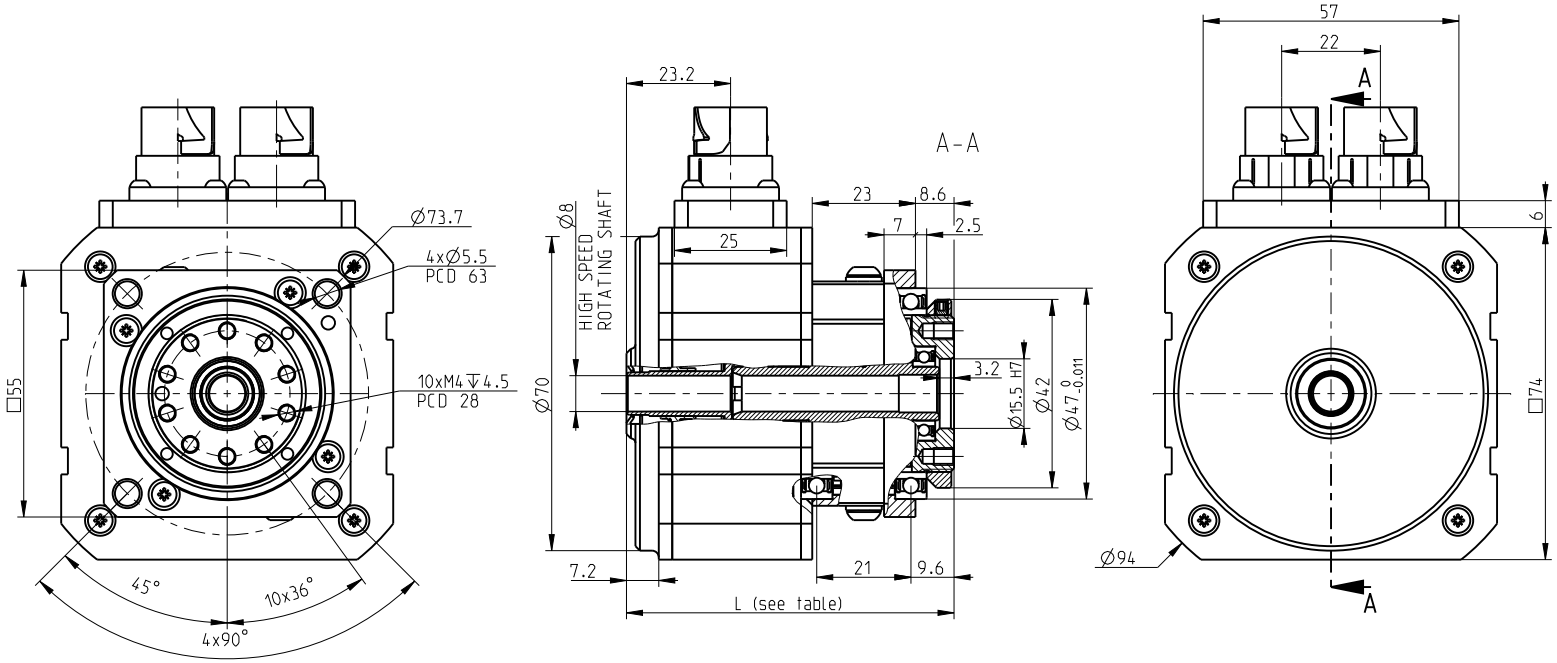

Hollow shaft rotates at motor speed

Size	Feedback type (d)	Without brake		With brake	
		Dimension L ± 0,5 [mm]	Weight m [kg] *	Dimension L ± 0,5 [mm]	Weight m [kg] *
DSF 050	OA	75	1.2	100	1.4
	OJ	73	1.2	100	1.4
	ON	75	1.2	105	1.4

Courtesy of Steven Engineering, Inc - (800) 258-9200 - sales@steveneng.com - www.stevenengineering.com

DSF 070 - i - abcde-fg-xy

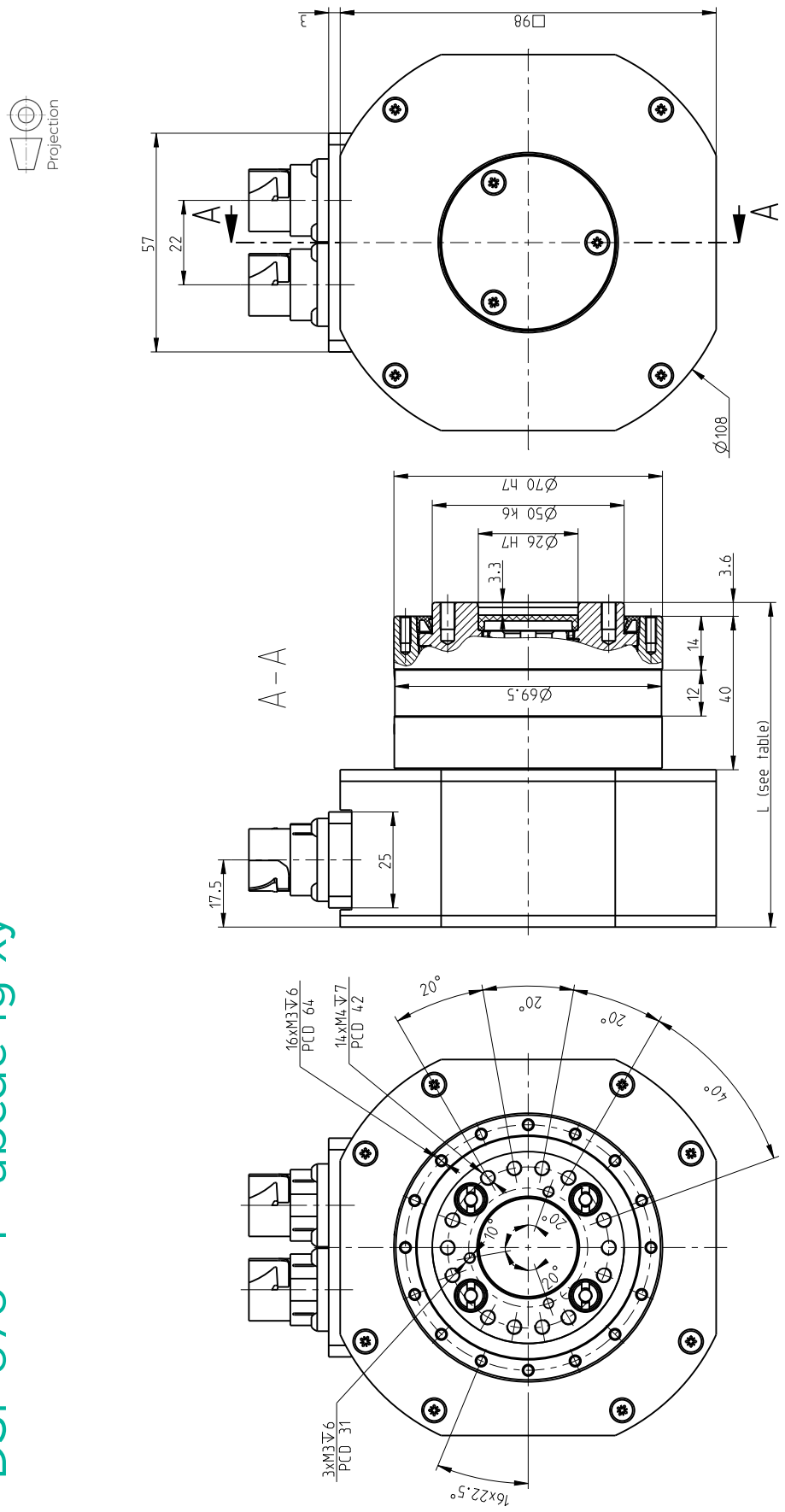

Size	Feedback type (d)	Without brake		With brake	
		Dimension L ± 0.5 [mm]	Weight m [kg] *	Dimension L ± 0.5 [mm]	Weight m [kg] *
DSF 070	OA	92	3.5	-	-
	OB,OC	97	3.5	-	-
	OD,OE	92	3.5	-	-
	OM,ON	85	3.5	-	-

DSF 070 – i – abcde-fg-xy

SPINEA BY TIMKEN

Courtesy of Steven Engineering, Inc - (800) 258-9200 - sales@steveneng.com - www.stevenengineering.com

DSF 095 - i - abcde-fg-xy

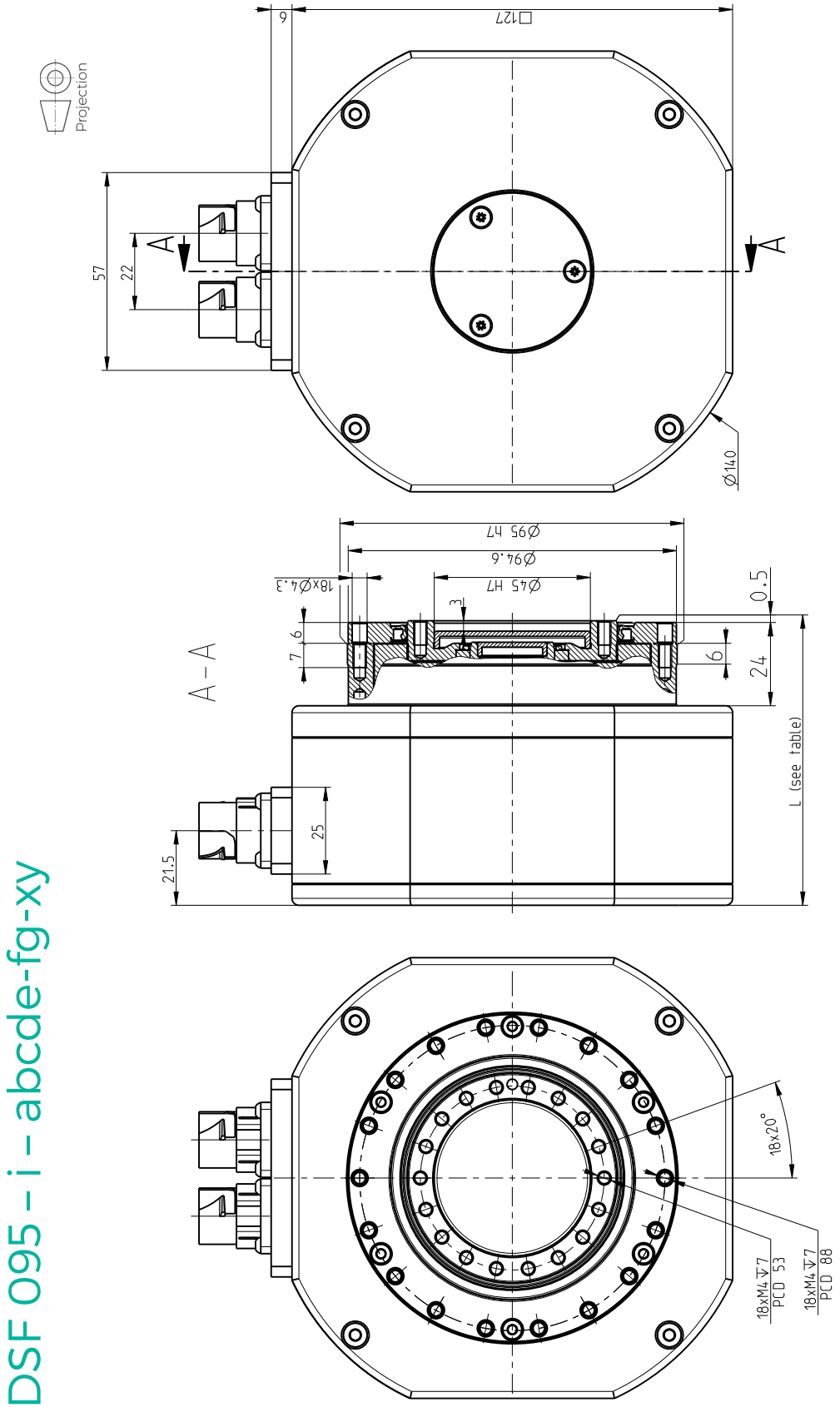

Size	Feedback type (d)	Without brake		With brake	
		Dimension L ± 0.5 [mm]	Weight m [kg] *	Dimension L ± 0.5 [mm]	Weight m [kg] *
DSF 095	OA	93	4.5	-	-
	OB,OC	93	4.5	-	-
	OD,OE	93	4.5	-	-
	OJ	93	4.5	-	-
	OM,ON	82	4.5	-	-

DSF 095 - i - abcde-fg-xy

Courtesy of Steven Engineering, Inc - (800) 258-9200 - sales@steveneng.com - www.stevenengineering.com

Tab. 8.4.b: DSF series technical data table

Reduction Gear parameters		Tolerance	DSF 050		
Reduction ratio	i		63		
Rated output torque	T_R [Nm]		18		
Acceleration/braking output torque	T_{acc} [Nm]		36		
Rated input speed	n_r [rpm]		2 000		
Maximum allowable input speed [8]	n_{max} [rpm]		5 000		
Allowable moment [2][3]	M_{cmax} [Nm]		44		
Tilting stiffness [1][5]	M_t [Nm/arcmin]		4		
Torsional stiffness [1][6]	k_t [Nm/arcmin]		2.5		
Lost motion	LM [arcmin]		< 1.5		
Hysteresis	H [arcmin]		< 1.5		
Rated radial force [2]	F_{rR} [kN]		1.44 [7]		
Maximum axial force [2][4]	$F_{a\,max}$ [kN]		1.9		
Gear lubrication			Grease Castrol TRIBOL GR TT 1 PD		
Reduction gear limit temperature	[°C]		60 °C		
Standard ambient temperature range	[°C]		-10 °C to +40 °C		
Motor parameters					
DC BUS voltage	U_{dc} [V_{dc}]	+/- 10%	24	320	560
Motor rated speed	n_n [rpm]		On request	3 500	3 500
Motor rated torque	M_n [Nm]	+/- 10%		0.3	0.3
Motor rated current	I_n [A_{rms}]			2	2
Motor stall torque	M_o [Nm]	+/- 10%		0.3	0.3
Motor stall current	I_o [A_{rms}]			2	2
Motor peak torque	M_{max} [Nm]	+/- 10%		1.2	1.2
Motor peak current	I_{max} [A]			8	8
Motor back-EMF constant	K_E [V_{peak}/krpm]	+/- 10%		12	12
Motor torque constant	K_T [Nm/A_{rms}]	+/- 10%		0.15	0.15
Terminal resistance (L-L)	R_{2ph} [Ω]	+/- 10%		4.4	4
Terminal inductance (L-L)	L_{2ph} [mH]	+/- 20%		6	6
Number of poles	2p			10	10
Electromagnetic brake DC supply	[V_{dc}]		24, Special		
Electromagnetic brake torque at input	[Nm]		0.4		
Protection class			IP 64		
Motor Insulation class			F		
Paint			RAL 9005		
Motor number of phases			3		
Motor type of connection			Y(star-configuration)		

1) Mean statistical value
2) Load at output speed 32 rpm for size 050, other sizes at 15 rpm
3) Moment M_c max at F_a=0. If F_a≠0 see Glossary
4) Axial force F_a max for M_c=0 (In case of size 050 also F_r=0 condition has to be fullfiled). If M_c≠0 see Glossary
5) The parameter depends on the high precision reduction gear version.
6) The parameter depends on the version, ratio and lost motion of the high precision reduction gear.
7) For size 050 it is value of MAXIMUM RADIAL FORCE $F_{r\,max}$ for a_2=0; F_a=0 and at 32 rpm output speed. For a_2>0; F_a=0 at 32 rpm output speed $F_{r\,max}$= 0.044/(a_2+0.0305) [kN]. a_2 represents the distance of the radial force centre from the front of the output flange in meters see Glossary.
8) Instantaneous speed peak that may occur within the working cycle. Note please the temperature on the gear case that should not significantly exceed 60°C
9) 4 500 rpm for ratio 73 ; 4 800 rpm for ratio 95

SPINEA BY TIMKEN

Courtesy of Steven Engineering, Inc - (800) 258-9200 - sales@steveneng.com - www.stevenengineering.com

Tab. 8.4.b: DSF series technical data table - continued

DSF 070			DSF 095		
57. 75			73. 95		
50			85		
100			170		
2 000			2 000		
5 000			4 500 / 4 800 [9]		
142			410		
35			120		
7			15		
< 1.5			< 1		
< 1.5			< 1		
2.8			3.5		
4.1			11.1		
Grease Castrol TRIBOL GR TT 1 PD			Grease Castrol TRIBOL GR TT 1 PD		
60 °C			60 °C		
-10 °C to +40 °C			-10 °C to +40 °C		
24	320	560	24	320	560
On request	3 000	3 000	On request	2 500	2 500
	1	1		1.8	1.8
	2	1.12		2.6	1.5
	1.08	1.08		1.8	1.8
	2.2	1.2		2.6	1.5
	3	3		4.3	4.3
	6	3.4		6.2	3.6
	44.37	84		61.2	111
	0.5	0.89		0.692	1.2
	5.2	14.5		3.9	14
	9.8	30		7.8	26
	16	16		20	20
-			-		
-			-		
IP 64			IP 64		
F			F		
RAL 9005			RAL 9005		
3			3		
Y(star-configuration)			Y(star-configuration)		

IMPORTANT NOTES:

- Load values in the table apply to valid for the nominal life of L_{10} = 6 000 hours. Service life for average torque T_a and average speed n_a other than T_R ,n_R can be calculated. Please contact manufacturer with estimated duty cycle.
- High precision reduction gears are preffered for intermittent duty cycles (S3-S8); the output speed in aplications is an inverted variable. The S1 continuous duty cycle should to be consulted with manufacturer.
- Please consult the maximum speed in duty cycle with the manufacturer.
- The values in the table refer to the ambient temperature within 20°C – 25°C.
- For ambient temperatures lower than -10°C pre-heating might be considered - please consult manufacturer.

Courtesy of Steven Engineering, Inc - (800) 258-9200 - sales@steveneng.com - www.stevenengineering.com

Tab. 8.4.c: Inertia at input (DSF actuator without brake)

Feedback type (d)	$J_{w/o\ brake}$	DSF 050	DSF 070	DSF 095
0A	10^{-4} kgm²	–	0.637	3.349
0B	10^{-4} kgm²	–	0.615	3.330
0C	10^{-4} kgm²	–	0.615	3.330
0D	10^{-4} kgm²	0.094	0.617	3.332
0E	10^{-4} kgm²	0.094	0.617	3.332
0J	10^{-4} kgm²	0.091	–	3.330
0M	10^{-4} kgm²	–	0.630	3.346
0N	10^{-4} kgm²	0.105	0.630	3.346

Tab. 8.4.d: Inertia at input (DSF actuator with brake)

Feedback type (d)	$J_{w\ brake}$	DSF 050	DSF 070	DSF 095
0A	10^{-4} kgm²	–	–	–
0B	10^{-4} kgm²	–	–	–
0C	10^{-4} kgm²	–	–	–
0D	10^{-4} kgm²	0.104	–	–
0E	10^{-4} kgm²	0.104	–	–
0J	10^{-4} kgm²	0.102	–	–
0M	10^{-4} kgm²	–	–	–
0N	10^{-4} kgm²	0.118	–	–

SPINEA BY TIMKEN

Courtesy of Steven Engineering, Inc - (800) 258-9200 - sales@steveneng.com - www.stevenengineering.com

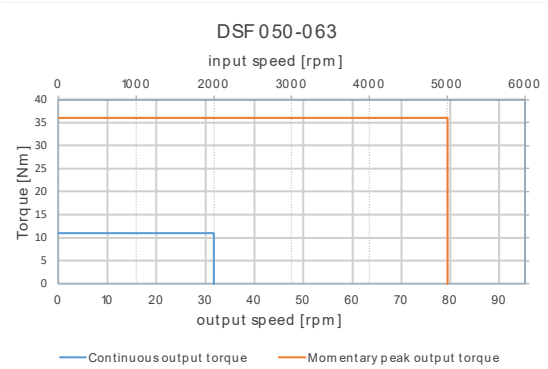

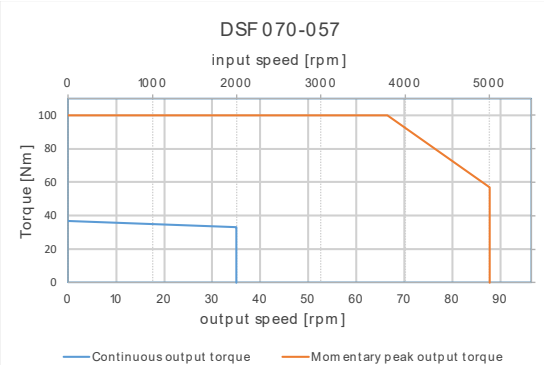

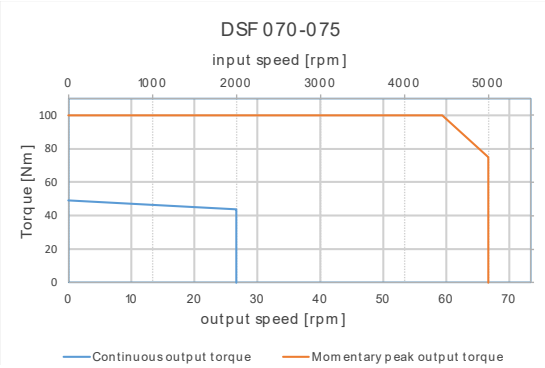

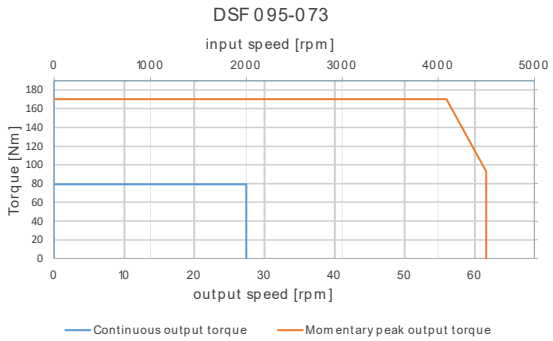

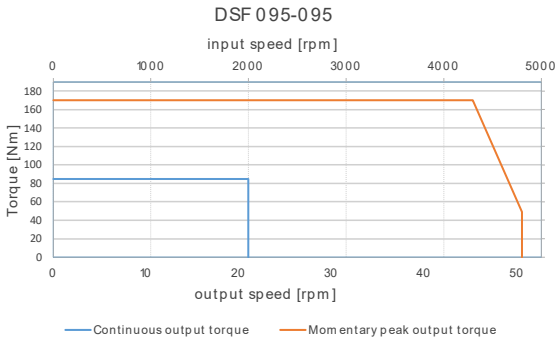

Courtesy of Steven Engineering, Inc - (800) 258-9200 - sales@steveneng.com - www.stevenengineering.com

8.5 Configuration matrix

Tab. 8.5.a: Feedback availability matrix

(d)	Feedback type	DS 050	DS 070	DS 095	DS 110	DS 115	DS 140	DS 155
0A	Resolver	✓	✓	✓	✓	✓	✓	✓
0B	Absolute Singleturn Encoder Hiperface	✓	✓	✓	✓	✓	✓	✓
0C	Absolute Multiturn Encoder Hiperface	✓	✓	✓	✓	✓	✓	✓
0D	Absolute Singleturn Encoder EnDat	✓	✓	✓	✓	✓	✓	✓
0E	Absolute Multiturn Encoder EnDat	✓	✓	✓	✓	✓	✓	✓
0F	Absolute Singleturn Encoder EnDat + sin/cos	o	✓	o	o	o	✓	o
0G	Absolute Multiturn Encoder EnDat + sin/cos	o	✓	o	o	o	✓	o
0H	Incremental sin/cos Encoder + sin/cos Commutation	×	✓	✓	✓	✓	✓	✓
0J	Incremental A/B/I Encoder + Block Commutation	✓	✓	o	o	✓	o	o
0K	Absolute Singleturn Encoder Hiperface DSL	✓	✓	✓	✓	✓	o	✓
0L	Absolute Multiturn Encoder Hiperface DSL	✓	✓	✓	✓	✓	o	✓
0M	Absolute Singleturn Encoder BiSS	o	o	o	o	✓	o	✓
0N	Absolute Multiturn Encoder BiSS	o	o	o	o	✓	o	✓
0P	Absolute Singleturn Encoder DRIVE-CLiQ	o	✓	✓	✓	o	o	o
0Q	Absolute Multiturn Encoder DRIVE-CLiQ	o	✓	✓	✓	o	o	o
0R	Absolute Multiturn Fanuc	×	✓	✓	✓	o	o	o
0S	Absolute Singleturn Fanuc	×	✓	✓	✓	o	o	o

✓ *Available* × *Not available* o *Upon request*

Tab. 8.5.b: Feedback types and signal wiring diagrams matrix

(d)	Feedback type	(g) Signal wiring diagram		Position Feedback
0A	Resolver	I	for Terminal cable	Analogue sin/cos tracks
		J	for Connectors	
0B	Absolute Singleturn Encoder Hiperface	G	for Terminal cable	via Hiperface protocol
		H	for Connectors	
0C	Absolute Multiturn Encoder Hiperface	G	for Terminal cable	via Hiperface protocol
		H	for Connectors	
0D	Absolute Singleturn Encoder EnDat	A	for Terminal cable	via Endat protocol
		B	for Connectors	
0E	Absolute Multiturn Encoder EnDat	A	for Terminal cable	via Endat protocol
		B	for Connectors	
0F	Absolute Singleturn Encoder EnDat + sin/cos	C	for Terminal cable	via Endat protocol
		D	for Connectors	
0G	Absolute Multiturn Encoder EnDat + sin/cos	C	for Terminal cable	via Endat protocol
		D	for Connectors	
0H	Incremental sin/cos Encoder + sin/cos Commutation	E	for Terminal cable	1Vpp sin/cos tracks
		F	for Connectors	
0J	Incremental A/B/I Encoder + Block Commutation	N	for Terminal cable	Rectangular A/B tracks and Index mark once per revolution
		O	for Connectors	
0K	Absolute Singleturn Encoder Hiperface DSL	J1	for Terminal cable	via Hiperface DSL protocol
		H1	for Connectors	
0L	Absolute Multiturn Encoder Hiperface DSL	J1	for Terminal cable	via Hiperface DSL protocol
		H1	for Connectors	
0M	Absolute Singleturn Encoder BiSS	R	for Terminal cable	via BiSS protocol
		S	for Connectors	
0N	Absolute Multiturn Encoder BiSS	R	for Terminal cable	via BiSS protocol
		S	for Connectors	
0P	Absolute Singleturn Encoder DRIVE-CLiQ	T	for Terminal cable	via Drive-CliQ protocol
		U	for Connectors	
0Q	Absolute Multiturn Encoder DRIVE-CLiQ	T	for Terminal cable	via Drive-CliQ protocol
		U	for Connectors	
0R	Absolute Multiturn Fanuc	A	for Terminal cable	via Fanuc serial αi protocol
		B	for Connectors	
0S	Absolute Singleturn Fanuc	A	for Terminal cable	via Fanuc serial αi protocol
		B	for Connectors	

SPINEA BY TIMKEN
Courtesy of Steven Engineering, Inc - (800) 258-9200 - sales@steveneng.com - www.stevenengineering.com

Tab. 8.5.a: Feedback availability matrix - continued

DSM 050	DSM 070	DSM 095	DSM 110	DSH 050	DSH 070	DSH 085	DSH 110	DSH 115	DSH 125	DSH 155	DSH 170	DSF 050	DSF 070	DSF 095
✓	✓	✓	✓	✓	✓	O	O	O	O	O	O	O	✓	✓
✓	✓	✓	✓	×	×	✓	O	✓	✓	✓	✓	O	✓	✓
✓	✓	✓	✓	×	×	✓	O	✓	✓	✓	✓	O	✓	✓
✓	✓	✓	✓	×	O	✓	O	✓	✓	✓	✓	✓	✓	✓
✓	✓	✓	✓	×	O	✓	O	✓	✓	✓	✓	✓	✓	✓
O	O	O	O	×	O	O	O	O	✓	O	✓	O	O	O
O	O	O	O	×	×	O	×	×	×	×	O	O	O	O
×	✓	✓	✓	×	×	O	×	×	×	×	O	×	O	O
O	O	O	O	✓	✓	O	O	O	O	O	O	✓	O	O
✓	O	O	O	×	×	×	×	×	×	×	×	O	O	O
✓	O	O	O	×	×	×	×	×	×	×	×	O	O	O
O	✓	O	O	✓	O	✓	O	O	✓	O	O	✓	✓	✓
O	✓	O	O	✓	✓	✓	O	O	✓	O	✓	✓	✓	✓
O	×	O	O	×	×	×	×	×	×	×	×	O	O	O
O	×	O	O	×	×	×	×	×	×	×	×	O	O	O
×	O	O	O	×	×	×	×	×	×	×	×	×	O	O
×	O	O	O	×	×	×	×	×	×	×	×	×	O	O

✓ *Available* × *Not available* O *Upon request*

Tab. 8.5.b: Feedback types and signal wiring diagrams matrix - continued

Position resolution	Commutation type	Additional Incremental signals	Additional signals Resolution
1 line per revolution	via Position Feedback Absolute Position	–	–
Number of bits per revolution	via Position Feedback Absolute Position	1Vpp sin/cos 1)	Number of lines per revolution
Number of bits per revolution + Number of revolutions	via Position Feedback Absolute Position	1Vpp sin/cos 1)	Number of lines per revolution
Number of bits per revolution	via Position Feedback Absolute Position	–	–
Number of bits per revolution + Number of revolutions	via Position Feedback Absolute Position	–	–
Number of bits per revolution	via Position Feedback Absolute Position	1Vpp sin/cos	Number of lines per revolution
Number of bits per revolution + Number of revolutions	via Position Feedback Absolute Position	1Vpp sin/cos	Number of lines per revolution
Number of lines per revolution	1 sin/cos track over one revolution for coarse absolute position of commutation angle		1 line per revolution
Number of counts per revolution	U/V/W states (Halls states) for block commutation		Motor poles dependant
Number of bits per revolution	via Position Feedback Absolute Position	–	–
Number of bits per revolution + Number of revolutions	via Position Feedback Absolute Position	–	–
Number of bits per revolution	via Position Feedback Absolute Position	–	–
Number of bits per revolution + Number of revolutions	via Position Feedback Absolute Position	–	–
Number of bits per revolution	via Position Feedback Absolute Position	–	–
Number of bits per revolution + Number of revolutions	via Position Feedback Absolute Position	–	–
Number of bits per revolution + Number of revolutions	via Position Feedback Absolute Position	–	–
Number of bits per revolution	via Position Feedback Absolute Position	–	–

Courtesy of Steven Engineering, Inc - (800) 258-9200 - sales@steveneng.com - www.stevenengineering.com

Tab. 8.5.d: Type of electrical connection (e) and power wiring diagrams (f)

Type and size	DC Bus Voltage	(e) = 0		(e) = 1		(e) = 2			(e) = 3		
		Straight connectors 923/623	Straight connectors 915/615	Connector on cable directed upward 923/623	Connector on cable directed upward 915/615	Hybrid Straight connectors 723 (Hiperface DSL only)	Hybrid Straight connectors 923 (Hiperface DSL only)	Hybrid Straight connectors 915 (Hiperface DSL only)	Hybrid Angled rotable connectors 723 (Hiperface DSL only)	Hybrid Angled rotable connectors 923 (Hiperface DSL only)	Hybrid Angled rotable connectors 915 (Hiperface DSL only)
DSx xxx	(a)	✓/o/×	✓/o/×	✓/o/×	✓/o/×	✓/o/×	✓/o/×	✓/o/×	✓/o/×	✓/o/×	✓/o/×
DSx 050	24VDC	×	✓	✓	o	o	o	o	o	o	o
	320VDC										
	560VDC										
DSx 070	24VDC	✓	o	✓	o	o	o	o	o	o	o
	320VDC										
	560VDC										
DSH 085	24VDC	✓	o	✓	o	o	o	o	o	o	o
	320VDC										
	560VDC										
DSx 095	24VDC	✓	×	✓	×	o	o	×	o	o	×
	320VDC		o		o			o			o
	560VDC										
DSx 110	24VDC	✓	×	✓	×	×	×	×	×	×	×
	320VDC		o		o	o	o	o	o	o	o
	560VDC										
DSx 115	24VDC	×	×	×	×	×	×	×	×	×	×
	320VDC	✓	o	✓	o	o	o	o	o	o	o
	560VDC										
DSH 125	24VDC	×	×	×	×	×	×	×	×	×	×
	320VDC	✓	o	✓	o	o	o	o	o	o	o
	560VDC										
DS 140	24VDC	×	×	×	×	×	×	×	×	×	×
	320VDC	✓	o	✓	o	o	o	o	o	o	o
	560VDC										
DSx 155	24VDC	×	×	×	×	×	×	×	×	×	×
	320VDC	✓	o	✓	o	o	o	o	o	o	o
	560VDC										
DSH 170	24VDC	×	×	×	×	×	×	×	×	×	×
	320VDC	✓	o	✓	o	o	o	o	o	o	o
	560VDC										

✓ *Available*
× *N/A - Not available*
o *On request*

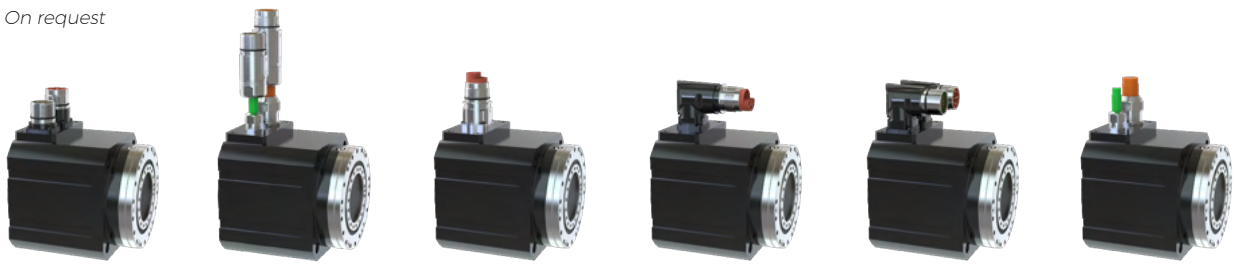

(e) = 0 (e) = 1 (e) = 2 (e) = 3 (e) = 4 (e) = 5

SPINEA BY TIMKEN
Courtesy of Steven Engineering, Inc - (800) 258-9200 - sales@steveneng.com - www.stevenengineering.com

Tab. 8.5.d: Type of electrical connection (e) and power wiring diagrams (f) - continued

DC Bus Voltage	(e) = 4	(e) = 5	(e) = 6	(e) = 7	(e) = 8	(e) = B		(e) = C	
	Angled rotable connectors 923/623	Cable upwards	Y-tec connector 915/615	Cable forwards	Cable backwards	Connector on cable directed forward 923/623	Connector on cable directed forward 915/615	Connector on cable directed backward 923/623	Connector on cable directed backward 915/615
(a)	✓/o/×	✓/o/×	✓/o/×	✓/o/×	✓/o/×	✓/o/×	✓/o/×	✓/o/×	✓/o/×
24VDC 320VDC 560VDC	×	✓	✓	✓	✓	✓	o	✓	o
24VDC 320VDC 560VDC	✓	✓	✓	o	o	✓	o	✓	o
24VDC 320VDC 560VDC	✓	✓	✓	o	o	✓	o	✓	o
24VDC	✓	✓	×	o	o	✓	×	✓	×
320VDC 560VDC			o				o		o
24VDC	✓	✓	×	o	o	o	×	o	×
320VDC 560VDC			o			✓	o	✓	o
24VDC	×	✓	×	o	o	×	×	×	×
320VDC 560VDC	✓		o			✓	o	✓	o
24VDC	×	✓	×	o	o	×	×	×	×
320VDC 560VDC	✓		o			✓	o	✓	o
24VDC	×	o	×	o	✓	×	×	×	×
320VDC 560VDC	✓		o			✓	o	✓	o
24VDC	×	✓	×	o	o	×	×	×	×
320VDC 560VDC	✓		o			✓	o	✓	o
24VDC	×	✓	×	✓	✓	×	×	×	×
320VDC 560VDC	✓		✓			✓	o	✓	o

✓ *Available*
× *N/A - Not available*
o *On request*

(e) = 6

(e) = 7

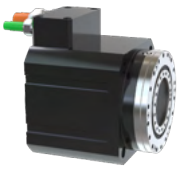

(e) = 8

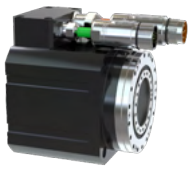

(e) = B

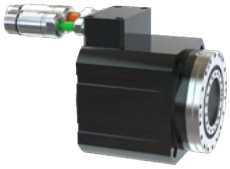

(e) = C

Courtesy of Steven Engineering, Inc - (800) 258-9200 - sales@steveneng.com - www.stevenengineering.com

Tab. 8.5.e: Power connection: Connectors and Terminal cable

Connector type	923 (6 pin, rotation E)		923 (8 pin, rotation E)		915 (9 pin, rotation E)		Terminal cable		
Power wiring diagram (f)	A		B		C		D		
	Pin	Signal	Pin	Signal	Pin	Signal	Colour	Mark	Signal
	1	U	1	U	1	Brake+ [1]	Green/Yellow		PE
	2	V	2	PE	2	Brake- [1]	–	1	U
	3	PE	3	W	3	therm+ [2]	–	2	V
	4	Brake+ [1]	4	V	4	therm- [2]	–	3	W
	5	Brake- [1]	A	Brake+ [1]	5	N/C	White	or 4	Brake+ [1]
	6	W	B	Brake- [1]	A	U	Brown	or 5	Brake- [1]
	–	–	C	N/C	B	V			
	–		D	N/C	C	W			
	–	–	–	–	PE	PE			
Pinout (for actuators with connectors and cables directed upwards / forwards / backwards with connector, e=0, 1, 4, 6, B, C	Connector type 923 (6 pin, rotation E)		Connector type 923 (8 pin, rotation E)		Connector type 915 (9 pin, rotation E)				
	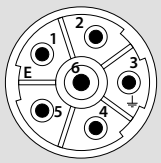		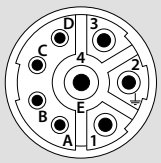		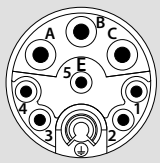				
Pinout (for cables between actuator and servo drive, CAB-POW-XXX-XX-XXX-XXX)	Connector type 923 (6 pin, rotation P)		Connector type 923 (8 pin, rotation P)		Connector type 915 (9 pin, rotation P)				
	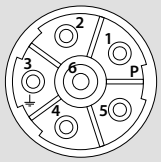		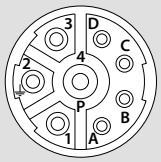		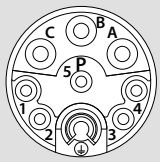				

NOTES:

- *N/C - Not Connected*
- *[1] Only connected in actuators with option Electromagnetic brake*
- *[2] Only connected in combination with Signal wiring diagram (g)=0*

NOTES:

- N/C - Not Connected
- 1) BAT use with EBI 135 and EBI 1135 with multiturn function powered via battery instead of **Sensor** which is internally connected to corre sponding supply line, and may be used for remote sense and control of power supply
- 2) Only connected in combination with Signal wiring diagram (g)=0
- 3) C/D signals for sin/cos commutation
- 4) In case of type of electrical connection with connector type 915/615 series thermistor are connected in **POWER** part of wiring diagram **(f) = C** to pins **3 = therm+** and **4 = therm-**
- 5) U/V/W signals for block commutation

SPINEA BY TIMKEN

Courtesy of Steven Engineering, Inc - (800) 258-9200 - sales@steveneng.com - www.stevenengineering.com

Courtesy of Steven Engineering, Inc - (800) 258-9200 - sales@steveneng.com - www.stevenengineering.com

Tab. 8.5.f: Signal connection: Connectors

Connector type	623 (12 pin, rotation E) 615 (12 pin, rotation E)					623 (17 pin, rotation E) 615 (15 pin, rotation E)		
Signal wiring diagram (g)	B	B	H	J	S	D	F (Only 623 17 pin connector)	O
Feedback type (d)	EnDat	Fanuc αi	Hiperface	Reslover	BiSS-C	EnDat + sin/cos	Incremental sin/cos + sin/cos commutation	Incremental A/B/I + block commutation
Pin	Signal							
1	Up (supply)	Up (supply)	Us (supply)	N/C	Us (supply)	B-	A+	A+
2	Sensor Up/UBAT [1]	Sensor Up	GND (supply)	therm+	N/C	0 V (supply)	A-	A-
3	0 V (supply)	0 V (supply)	+COS	S4	GND (supply)	A-	R+	B+
4	Sensor 0V/ 0 VBAT [1]	Sensor 0V	REFCOS	S3	N/C	Up (supply)	D- [3]	B-
5	DATA+	DATA+	REFSIN	R2 (supply)	MA+	DATA+	C+ [3]	I+
6	DATA-	DATA-	+SIN	therm-	MA-	N/C	C- [3]	I-
7	CLOCK+	Request+	therm+	S2	SLO+	therm+	0 V (supply)	U+ [5]
8	CLOCK-	Request-	therm-	S1	SLO-	CLOCK+	therm+	U- [5]
9	N/C	N/C	DATA+	R1 (supply)	N/C	B+	therm-	V+ [5]
10	N/C	N/C	DATA-	N/C	N/C	Sensor 0 V [2]	Up (supply)	V- [5]
11	therm+	therm+	N/C	N/C	therm+	A+	B+	W+ [5]
12	therm-	therm-	N/C	N/C	therm-	Sensor Up [2]	B-	W- [5]
13	N/C	N/C	N/C	N/C	N/C	DATA-	R-	Us (supply)
14	N/C	N/C	N/C	N/C	N/C	therm-	D+ [3]	GND (supply)
15	N/C	N/C	N/C	N/C	N/C	CLOCK-	Sensor 0 V [2]	therm+ [4]
16	N/C	N/C	N/C	N/C	N/C	N/C	Sensor Up [2]	therm- [4]
17	N/C	N/C	N/C	N/C	N/C	N/C	N/C	N/C

Pinout (for actuators with connectors and cables directed up-wards / forwards / backwards with connector, e=0, 1, 4, 6, B, C	Connector type 623 (12 pin, rotation E)	Connector type 615 (12 pin, rotation E)	Connector type 623 (17 pin, rotation E)	Connector type 615 (15 pin, rotation E)
	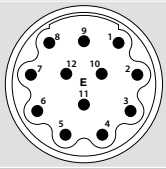	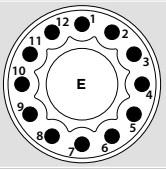	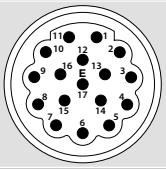	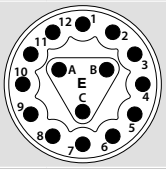
Pinout (for cables be-tween actuator and servo drive, CAB-POW-XXX--XX-XXX-XXX)	Connector type 623 (12 pin, rotation P)	Connector type 615 (12 pin, rotation P)	Connector type 623 (17 pin, rotation P)	Connector type 615 (15 pin, rotation P)
	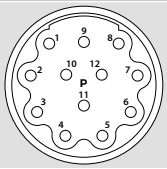	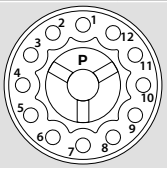	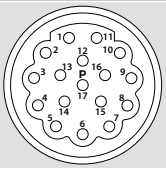	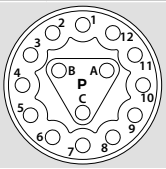

SPINEA BY TIMKEN

Courtesy of Steven Engineering, Inc - (800) 258-9200 - sales@steveneng.com - www.stevenengineering.com

Tab. 8.5.f: Signal connection: Connectors - continued

Connector type	**617 (10 pin, rotation E)**	**Connector type**	**Connector**
Signal wiring diagram (g)	**U**	**Signal wiring diagram (g)**	**T**
Feedback type (d)	**Drive-CLiQ**	**Feedback type (d)**	**Drive-CLiQ**
Pin		**Pin**	
1	TxP	1	TxP
2	TxN	2	TxN
3	N/C	3	RxP
4	N/C	4	N/C
5	RxP	5	N/C
6	RxN	6	RxN
7	N/C	7	N/C
8	N/C	8	N/C
9	Up (supply)	A	Up (supply)
10	0 V (supply)	B	0 V (supply)
Pinout (for actuators with connectors and cables directed up-wards / forwards / backwards with connector, e=0, 1, 4, 6, B, C	Connector type 617 (10 pin, rotation E)		
	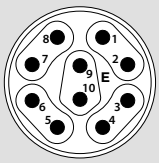		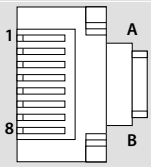

Courtesy of Steven Engineering, Inc - (800) 258-9200 - sales@steveneng.com - www.stevenengineering.com

Tab. 8.5.g: Signal connection: Terminal cable

Signal wiring diagram (g)		A	A	C	E	G	I	N	R	T
Feedback type (d)		EnDat	Fanuc αi	EnDat + sin/cos	Incremental sin/cos + sin/cos commutation	Hiperface	Resolver	Incremental A/B/I + block commutation	BiSS-C	Drive-CLiQ
Cable DIN 47100		Signal								
Core	Colour									
1	White	therm+	therm+	therm+	therm+	therm+	therm+	therm+	therm+	N/C
2	Brown	therm-	therm-	therm-	therm-	therm-	therm-	therm-	therm-	N/C
3	Green	Up (supply)	Up (supply)	Up (supply)	Up (supply)	Us (supply)	R1 (supply)	Us (supply)	Us (supply)	Up (supply)
4	Yellow	0 V (supply)	0 V (supply)	0 V (supply)	0 V (supply)	GND (supply)	R2 (supply)	GND (supply)	GND (supply)	0 V (supply)
5	Grey	DATA+	DATA+	DATA+	D+ [3]	DATA+	S1	A+	SLO+	RXP
6	Pink	DATA-	DATA-	DATA-	D- [3]	DATA-	S2	A-	SLO-	RXN
7	Blue	CLOCK+	Request+	CLOCK+	C+ [3]	+SIN	S3	B+	MA+	TXP
8	Red	CLOCK-	Request-	CLOCK-	C- [3]	+COS	S4	B-	MA-	TXN
9	Black	Sensor Up/UBAT [1]	Sensor Up	Sensor Up [2]	Sensor Up [2]	REFSIN	N/C	I+	N/C	N/C
10	Violet	Sensor 0V/ 0 VBAT [1]	Sensor 0V	Sensor 0V [2]	Sensor 0V [2]	REFCOS	N/C	I-	N/C	N/C
11	Grey/Pink	N/C	N/C	A+	A+	N/C	N/C	U+ [5]	N/C	N/C
12	Red/Blue	N/C	N/C	A-	A-	N/C	N/C	U- [5]	N/C	N/C
13	White/Green	N/C	N/C	B+	B+	N/C	N/C	V+ [5]	N/C	N/C
14	Brown/Green	N/C	N/C	B-	B-	N/C	N/C	V- [5]	N/C	N/C
15	White/Yellow	N/C	N/C	N/C	R+	N/C	N/C	W+ [5]	N/C	N/C
16	Yellow/Brown	N/C	N/C	N/C	R-	N/C	N/C	W- [5]	N/aC	N/C
17	White/Grey	N/C	N/C	N/C	N/C	N/C	N/C	N/C	N/C	N/C

NOTES:
- N/C - Not Connected
- [1] BAT use with EBI 135 and EBI 1135 with multiturn function powered via battery instead of **Sensor** which is internally connected to corresponding supply line, and may be used for remote sense and control of power supply
- [2] Only connected in combination with Signal wiring diagram (g)=0
- [3] C/D signals for sin/cos commutation
- [4] In case of electrical connection type with connector type 915/615 series thermistor are connected in **POWER** part of wiring diagram **(f) = C** to pins **3 = therm+** and **4 = therm-**
- [5] U/V/W signals for block commutation

SPINEA BY TIMKEN
Courtesy of Steven Engineering, Inc - (800) 258-9200 - sales@steveneng.com - www.stevenengineering.com

Tab. 8.5.h: Hybrid connection: Connectors and Terminal cable

Connector type	**723 (7+2 pin, rotation E)**		**915 (8 pin, rotation E)**		**923 (8 pin, rotation E)**		**Terminal cable**		
Hybrid wiring diagram (f) - Power + Hiperface DSL	**H0**		**H1**		**H2**		**J1**		
	Pin	**Signal**	**Pin**	**Signal**	**Pin**	**Signal**	**Colour**	**Mark**	**Signal**
	A	U	1	Brake+ [1]	1	U	Green/Yellow	–	PE
	B	V	2	Brake- [1]	2	PE	–	1	U
	C	W	3	DSL+	3	W	–	2	V
	D	N/C	4	DSL-	4	V	–	3	W
	PE	PE	5	N/C	A	Brake+ [1]	White	or 4	Brake+ [1]
	H	DSL+	A	U	B	Brake- [1]	Black	or 5	Brake- [1]
	L	DSL-	B	V	C	DSL+	White		DSL+
	7	Brake+ [1]	C	W	D	DSL-	Blue		DSL-
	8	Brake- [1]	PE	PE					
Pinout (for actuators with hybrid connectors, e=2,3)	Connector type 723 (7+2 pin, rotation E)		Connector type 915 (9 pin, rotation E)		Connector type 923 (8 pin, rotation E)				
	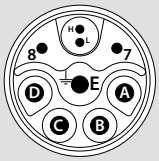		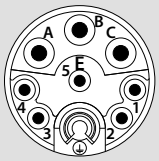		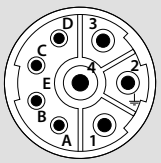				

NOTES:

- N/C - Not Connected
- [1] Only connected in actuators with electromagnetic brake option

Technical specifications of thermistors

Tab. 8.5.i: PTC 111-K13

T_{NAT} = 140 °C	
Resistance values according to DIN 44081 and DIN 44082	
Temperature range T [°C]	**Resistance R [Ω]**
-20 to 120	R ≤ 250
120 to 135	R ≤ 550
135 to 145	R ≤ 1 330
> 155	R ≤ 4 000

Tab. 8.5.j: PT 1000

Temperature range T [°C]	Resistance R [Ω]
-40	843
-30	882
-20	922
-10	961
0	1 000
10	1 039
20	1 078
30	1 117
40	1 155
50	1 194
60	1 232
70	1 271
80	1 309
90	1 347
100	1 385
110	1 423
120	1 461
130	1 498
140	1 536
150	1 573
160	1 611
170	1 648
180	1 685
190	1 722
200	1 759
210	1 795
220	1 832
230	1 868
240	1 905
250	1 941

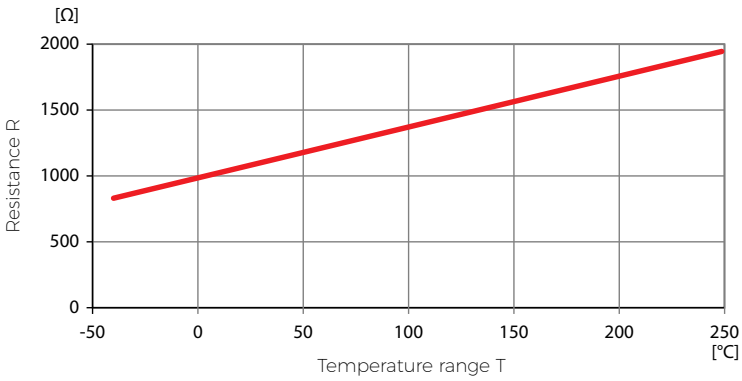

Fig. 8.5k: Resistance / Temperature PT 1000

SPINEA BY TIMKEN
Courtesy of Steven Engineering, Inc - (800) 258-9200 - sales@steveneng.com - www.stevenengineering.com

DriveSpin® size: 050 Identification Labels

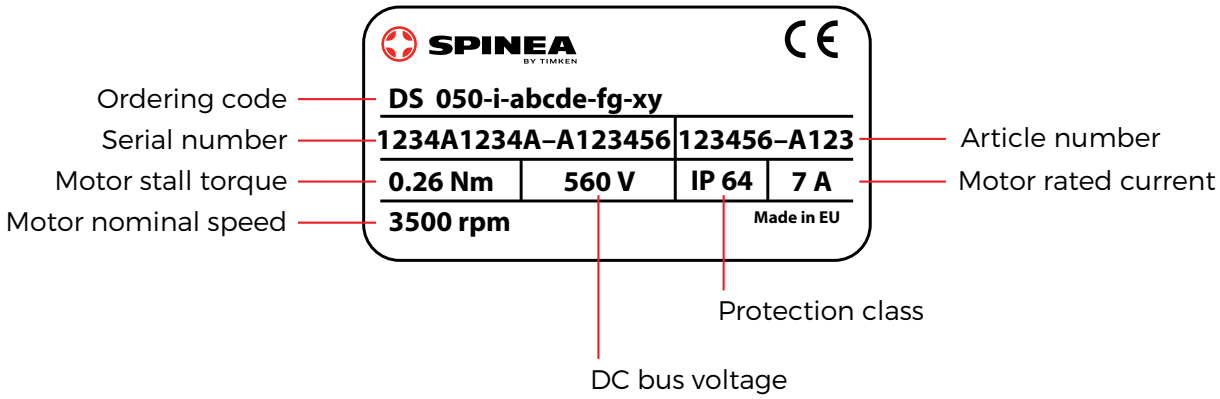

DriveSpin® size: 070, 085, 095, 110, 115, 125, 140, 155, 170 Identification Labels

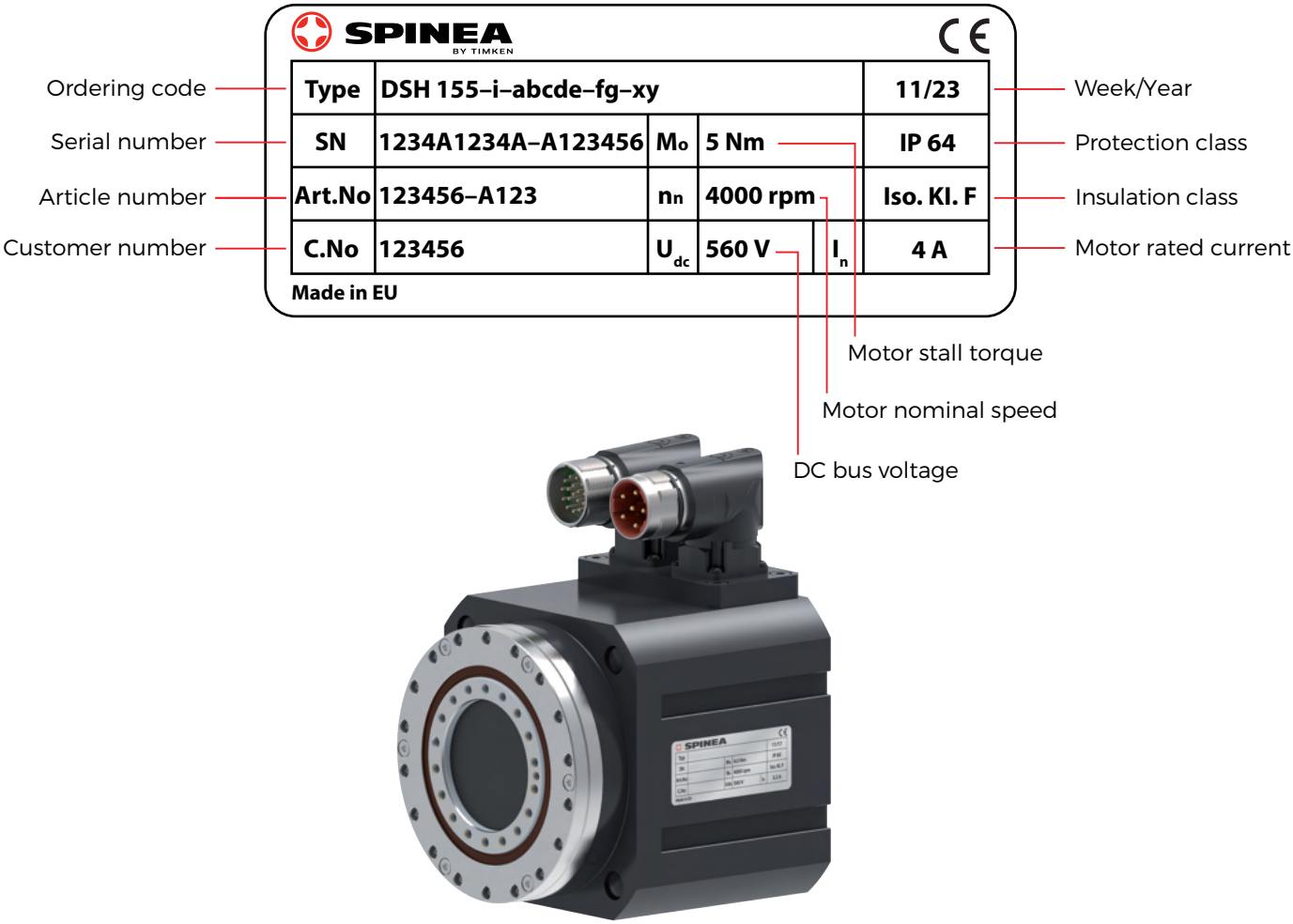

Courtesy of Steven Engineering, Inc - (800) 258-9200 - sales@steveneng.com - www.stevenengineering.com

8.6 Accessories configuration

Tab. 8.6: Ordering code for Cable

Description	Length	Connection type on actuator side	Wiring diagram on actuator side	Connection on servo drive side	Wiring diagram on servo drive side	Ordering code
Power cable, PUR 7x0.5 mm2, shielded, 6 pin female Intercontec connector	On XXX position, defined as XX.X meters (for example code 305 represent 30.5 meters)	923 (6 pin), rotation P	A	Without connector - free end	D	CAB-POW-XXX-00-01A-00D
Power cable, PUR 7x0.5 mm2, shielded, 8 pin female Intercontec connector		923 (8 pin), rotation P	B		D	CAB-POW-XXX-00-02B-00D
Power cable, PUR 7x0.5 mm2, shielded, 9 pin female Intercontec connector		915 (9 pin), rotation P	C		D	CAB-POW-XXX-00-03C-00D
Power cable, PUR 4x1 mm2 + 2x0.5 mm2, shielded, C-track compatible, 6 pin female Intercontec connector		923 (6 pin), rotation P	A		D	CAB-POW-XXX-10-01A-00D
Power cable, PUR 4x1 mm2 + 2x0.5 mm2, shielded, C-track compatible, 8 pin female Intercontec connector		923 (8 pin), rotation P	B		D	CAB-POW-XXX-10-02B-00D
Power cable, PUR 4x1 mm2 + 2x0.5 mm2, shielded, C-track compatible, 9 pin female Intercontec connector		915 (9 pin), rotation P	C		D	CAB-POW-XXX-10-03C-00D
Power cable, PUR 4x1.5 mm2 + 2x0.5 mm2, shielded, C-track compatible, 6 pin female Intercontec connector		923 (6 pin), rotation P	A		D	CAB-POW-XXX-11-01A-00D
Power cable, PUR 4x1.5 mm2 + 2x0.5 mm2, shielded, C-track compatible, 8 pin female Intercontec connector		923 (8 pin), rotation P	B		D	CAB-POW-XXX-11-02B-00D
Power cable, PUR 4x1.5 mm2 + 2x0.5 mm2, shielded, C-track compatible, 9 pin female Intercontec connector		915 (9 pin), rotation P	C		D	CAB-POW-XXX-11-03C-00D
Power cable, PUR 4x2.5 mm2 + 2x0.5 mm2, shielded, C-track compatible, 6 pin female Intercontec connector		923 (6 pin), rotation P	A		D	CAB-POW-XXX-12-01A-00D
Power cable, PUR 4x2.5 mm2 + 2x0.5 mm2, shielded, C-track compatible, 8 pin female Intercontec connector		923 (8 pin), rotation P	B		D	CAB-POW-XXX-12-02B-00D
Power cable, PUR 4x2.5 mm2 + 2x0.5 mm2, shielded, C-track compatible, 9 pin female Intercontec connector		915 (9 pin), rotation P	C		D	CAB-POW-XXX-12-03C-00D
Power cable, PUR 4x4 mm2 + 2x1 mm2, shielded, C-track compatible, 6 pin female Intercontec connector		923 (6 pin), rotation P	A		D	CAB-POW-XXX-13-01A-00D
Power cable, PUR 4x4 mm2 + 2x1 mm2, shielded, C-track compatible, 8 pin female Intercontec connector		923 (8 pin), rotation P	B		D	CAB-POW-XXX-13-02B-00D
Power cable, PUR 4x4 mm2 + 2x1 mm2, shielded, C-track compatible, 9 pin female Intercontec connector		915 (9 pin), rotation P	C		D	CAB-POW-XXX-13-03C-00D
Signal cable, PUR 10x0.14 mm2, shielded, C-track compatible, 12 pin female Intercontec connector	On XXX position, defined as XX.X meters (for example code 305 represent 30.5 meters)	623 (12 pin), rotation P	B/H/J/S	Without connector - free end	A/G/I/R	CAB-SIG-XXX-00-01B (or H/J/S)-00A(or G/I/R)
Signal cable, PUR 10x0.25 mm2, shielded, C-track compatible, 12 pin female Intercontec connector		623 (12 pin), rotation P	B/H/J/S		A/G/I/R	CAB-SIG-XXX-01-01B (or H/J/S)-00A(or G/I/R)
Signal cable, PUR 18x0.14 mm2, shielded, C-track compatible, 17 pin female Intercontec connector		623 (17 pin), rotation P	D/F/O		C/E/N	CAB-SIG-XXX-02-02D (or F/O)-00C(or E/N)
Signal cable, PUR 18x0.14 mm2, shielded, C-track compatible, 15 pin female Intercontec connector		615 (15 pin), rotation P	D/F/O		C/E/N	CAB-SIG-XXX-02-04D (or F/O)-00C(or E/N)

NOTES:

- *Please consider cable length limits for used feedback type and cross sections of power cables*

SPINEA BY TIMKEN
Courtesy of Steven Engineering, Inc - (800) 258-9200 - sales@steveneng.com - www.stevenengineering.com

Ordering code example

CAB POW-305-00-01A-00D

00–: **Connection type on Servo drive side**
––D: **Wiring diagram on Servo drive side**

01–: **Connection type on Actuator side**
––A: **Wiring diagram on Actuator side**

00: Cable type - **Power cable PUR 7x0.5 mm²**

305: Lenght of cable - **30.5 meters**

POW: **Power cable**

CAB: **Cable**

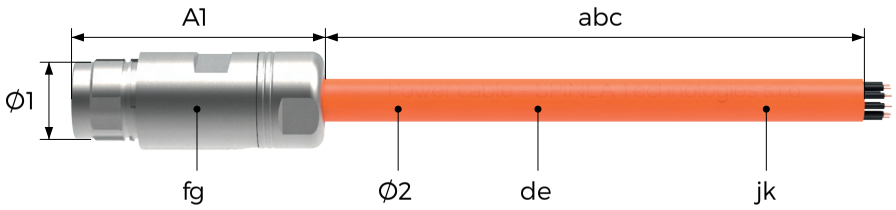

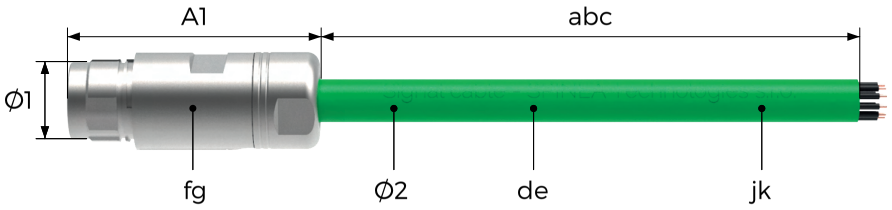

Type	abc	Cable length
POW	XXX	Defined as XX.X meters (for example code 305 represent 30.5)
SIG		

Type	de	Cable	ϕ2 (mm)
POW	00	PUR 7x0.5 mm²	7.2
	10	PUR 4x1 mm² + 2x0.5 mm²	9.6
	11	PUR 4x1.5 mm² + 2x0.5mm²	11
	12	PUR 4x2.5 mm² + 2x0.5mm²	12.8
	13	PUR 4x4 mm² + 2x1 mm²	14.8
SIG	00	PUR 10x0.14 mm2	6.3
	01	PUR 10x0.25 mm²	6.9
	02	PUR 18x0.14 mm²	7.3

Type	jk	Cable length
POW	00	Without connector - free end
SIG	00	Without connector - free end

Type	fg	Connector on actuator side	ϕ1 (mm)	ϕA (mm)
POW	01	923 (6 pin), rotation P	28	64
	02	923 (8 pin), rotation P	28	64
	03	915 (9 pin), rotation P	18.7	42
SIG	01	623 (12 pin), rotation P	26	55
	02	623 (17 pin), rotation P	26	55
	04	623 (15 pin), rotation P	18.7	42

Courtesy of Steven Engineering, Inc - (800) 258-9200 - sales@steveneng.com - www.stevenengineering.com

8.7 Performance conditions and technical terminology

TwinSpin®

Trademark of high precision reduction gear.

DriveSpin®

The combination of TwinSpin® high precision reduction gear, permanent magnet synchronous motor (further referred as PMSM, motor or electromotor), thermistor sensor and position feedback sensor. Optionally also power off parking electromagnetic brake can be built-in. Thermistor is inside the PMSM windings for overheat protection. PMSM, position feedback sensor and electromagnetic brake are placed on the shaft (also referred as input shaft) of TwinSpin®. Loads are usually connected to output flange of TwinSpin® which is also an output flange of DriveSpin®.

Input speed

It refers to TwinSpin® reduction gear input shaft speed driven by PMSM of DriveSpin®.

Output speed

It refers to the DriveSpin® output flange speed to drive connected loads.

Input torque

It refers to the TwinSpin® reduction gear input shaft torque generated by PMSM. (Note: Electromagnetic brake also generates torque at input; is not included here but defined as braking torque at input).

Output torque

It refers either to limiting torque developed either on the DriveSpin® output flange or calculated torque generated by PMSM including ratio and loss in gearbox, additional seals or bearings.

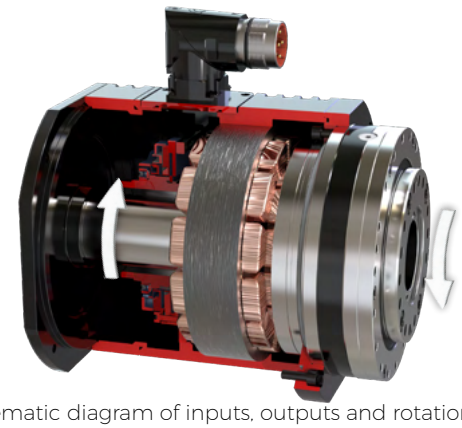

Fig. 8.8: Schematic diagram of inputs, outputs and rotation direction

Ratio

It expresses the number of mot or turns at input shaft required for a single rotation of l oad at the DriveSpin® actuator output flan ge. Load speed at output flange is inverse proportional to electromotor speed, thus a negative ratio mi ght be considered for purpose of calculation in control.

Hollow shaft diameter

It defines the DSH series diameter of hollow through bore. Standard versions of DSH 085, 115, 125, 155, 170 have built-in a static tube which prevents from contact with rotating input shaft, rotating at electromotor speed. For example, hollow shafts are used to supply hydraulic, pneumatic or electric media through cables, pipes or to supply additional components by other means, which might reduce space or eventually protects the supplies.

Courtesy of Steven Engineering, Inc - (800) 258-9200 - sales@steveneng.com - www.stevenengineering.com

Rated output torque, Rated input speed, Service life

Nominal service life of TwinSpin® reduction gear as a main component of actuator DriveSpin® is determined by service life of the input shaft bearings. The nominal service life is limited by the material fatigue of the bearings. It does not take into account other factors that may be a limit to the practical service life, such as insufficient lubrication contamination or overload. The nominal service life is only statistical value. It denotes time in operation under rated conditions during which 10% of a large number of reduction gears get damaged due to material fatigue. For further details or special calculations for your specific application please contact the Sales Department.

Motor rated torque

Nominal value of torque developed by PMSM in continuous operation, when the continuous nominal current is applied to the windings.

Continuous output torque

Actuator calculated output torque from PMSM rated performance including reducer ratio, efficiency and rated output torque of reducer.

Motor rated current

Is the nominal value of the electric RMS current used to obtain the continuous nominal torque from the electromotor.*)

Motor stall torque

Value of torque produced at zero speed for continuous functioning *).

Motor stall current

Nominal value of RMS current used to obtain the stall torque from the electromotor.*)

Motor peak torque

The nominal value of torque developed for a limited period of time when the peak current is applied to the windings.

Momentary peak output torque

Actuator peak output torque for limited period of time during acceleration and deceleration phase of duty cycle for acceleration or deceleration of inertial loads. It is calculated from PMSM peak performance including reducer ratio, efficiency and Acceleration/Braking Torque limits of reducer.

Motor peak current

The value of the electric current used to obtain the peak torque from the electromotor.

Motor back-EMF constant

The ratio of terminal to terminal peak voltage generated in the windings when motor rotor mechanically rotates at a speed of 1000 rpm.

Motor torque constant

The ratio of the developed torque to the applied RMS current for the electromotor specific winding.*)

Courtesy of Steven Engineering, Inc - (800) 258-9200 - sales@steveneng.com - www.stevenengineering.com

Terminal resistance (L-L)

The winding resistance measured between any two leads of the winding in particular configuration at 25°C. It might differ from the catalogue values depending on the type of connection or cable lengths.

Terminal inductance (L-L)

The winding inductance measured between any two leads of the winding in particular configuration at 25°C and 1 kHz. Permanent magnets of rotor influences the measured inductance value which varies in each electrical cycle.

Number of poles

The number of the rotor magnet poles (p is the number of pole pairs).

Electromagnetic brake DC supply

For DriveSpin® with option electromagnetic brake (c) ≠ 0 (see ordering code), it is voltage required to release/disengage the electromagnetic power off brake. For special modifications please contact our sales department.

Electromagnetic brake torque (at motor)

For DriveSpin® with option electromagnetic brake (c) ≠ 0 (see ordering code), it is torque generated by electromagnetic brake at the input shaft of built-in reduction gear mechanism. It is a nominal value at standard working conditions stated by the manufacturer.

Protection class

The degree of protection according to IS/IEC 60034-5 provided that DriveSpin® is mounted in accordance with assembly instructions and in case of connectors (see the type of electrical connection) with counterparts properly connected.

Motor insulation class

It defines maximum winding temperature and permitted winding temperature rise in relation to predefined ambient temperature range. (Reduction gear limit temperature must be also taken into consideration). Winding classification F for thermal class 155 °C. Each 10 °C rise above the rating may reduce the motor lifetime by one half. For example electromotor operating at 180 °C have an estimated life of 8 500 hours with class F.

Paint

Standard RAL 9005 black colour. For special painting please contact our sales department.

Number of motor phases, type of motor connection

Defines electromotor windings arrangement and count.

Courtesy of Steven Engineering, Inc - (800) 258-9200 - sales@steveneng.com - www.stevenengineering.com

Inertia at input

It represents the calculated value of summary inertia of all rotating parts at input shaft see Fig. 8.8. For dynamic applications where high accuracy and responsiveness is needed, reflected load inertia JL in should be less than 5-times of inertia at input JL out. For calculation of reflected inertia of load on input shaft use the following equation:

$$J_{L\,in} = \frac{J_{L\,out}}{i^2}$$

$J_{L\,in}$ – reflected inertia to input shaft
$J_{L\,out}$ – load inertia
i – gear ratio

Duty cycle

IEC 60034-1 (the International Electrotechnical Commission) duty cycles designations:

Tab. 8.8: Duty cycles

S1	Continuous duty	The motor works at a constant load for enough time to reach the temperature equilibrium.
S2	Short-time duty	The motor works at a constant load, but not long enough to reach the temperature equilibrium. The rest periods are long enough for the motor to reach ambient temperature.
S3	Intermittent periodic duty	Sequential, identical run and rest cycles with constant load. The temperature equilibrium is not reached. Starting current has little effect on the temperature rise.
S4	Intermittent Periodic duty with starting	Sequential, identical start, run and rest cycles with constant load. The temperature equilibrium is not reached, but starting current affects the temperature rise.
S5	Intermittent periodic duty with electric braking	Sequential, identical cycles of starting, running at constant load and running with no load. No rest periods.
S6	Continuous operation with intermittent load	Sequential, identical cycles of running with constant load and running with no load. No rest periods.
S7	Continuous operation with electric braking	Sequential identical cycles of starting, running at constant load and electric braking. No rest periods.
S8	Continuous operation with periodical changes in load and speed	Sequential, identical duty cycles run at constant load and given speed followed by running at other constant loads and speeds. No rest periods.
S9	Duty with non-periodical load and speed variations	Load and speed vary periodically within the permitted operating range. Frequent overloading may occur.
S10	Duty with discrete constant loads and speeds	Duty with discrete number of load/speed combinations, maintained long enough to reach the thermal equilibrium.

The thermal Equilibrium is the state reached when the machine temperature rise does not vary by more than 2K = 2°C per an hour. High precision reduction gears are preferred for intermittent duty cycles (S3-S8). The S1 continuous duty cycles should be consulted with the manufacturer.

*) The stated values apply to the frameless electromotor mounted on a standard aluminum heat sink during the process of motor manufacture.

Courtesy of Steven Engineering, Inc - (800) 258-9200 - sales@steveneng.com - www.stevenengineering.com

8.9 Assembly

Values of the axial and radial run-out of the output flange

Tab. 8.9.a: Values of the axial and radial run-out of the output flange

Type	T [mm]	Z [mm]
050	0.006	0.015
070	0.007	0.020
095	0.02	0.03
110	0.008	0.025
115	0.03	0.05
140	0.009	0.025
155	0.02	0.04

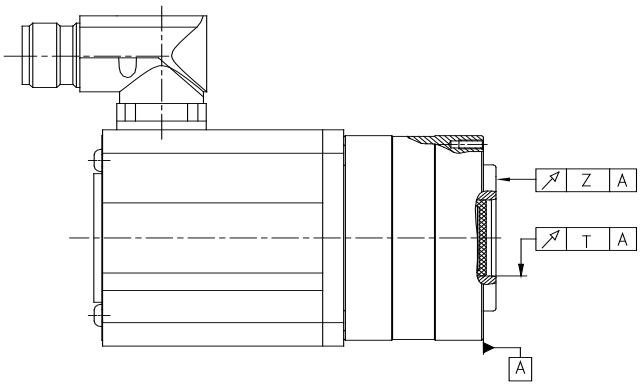

Fig. 8.9.a: Axial and radial runout to base A

Installation of components on the electric actuator output flange

Before the installation, remove the layer of preservation oil from the surface of the reduction gear part of the actuator with clean and dry cloth. Degrease the contact surfaces of the friction connections. During the cleaning, avoid introduction of the degreasing agent in the reduction gear part of the actuator. The contact surfaces of the reduction gear part of the actuator are not protected against corrosion. If you need more information, please contact the SPINEA® Sales Department or our regional representative. During the assembly of screw connections, proceed as follows: Mount a screw into a functional thread until the screw head sits on the part being connected. Mount all screws in the same way and afterwards tighten them with a wrench. Tighten the screws with two turns at the required torque. Tighten the screws gradually, otherwise irregular tightening of the connection and thus also deformation of the parts may occur. Tighten the screws along the perimeter of a circle in a cross-like manner, i.e. as shown on Fig. 8.9.a. In case of a connection subjected to shocks and cyclical loads, it is necessary to secure it against self-loosening.

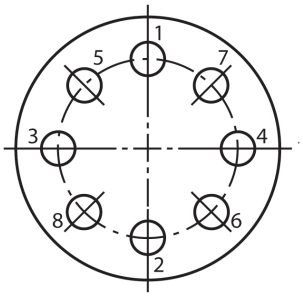

Fig. 8.9.a: Tighten the screws along the perimeter of a circle in a cross-like manner

SPINEA BY TIMKEN
Courtesy of Steven Engineering, Inc - (800) 258-9200 - sales@steveneng.com - www.stevenengineering.com

For safe transmission of torque it is always necessary to use full number of the screws! Tightening torque values are specified in Tab. 8.9.b.

Tab. 8.9.b: Tightening torque of screws

Screw	Tightening torque [Nm]	Clamping force [N]	Screw material class and specification
M3	1.9	3 100	ISO 898 T1 10.9 or 12.9
M4	4.3	5 300	
M5	8.4	8 800	
M6	14	12 400	
M8	35	22 750	
M10	70	36 200	

Allowed torque transmitted by the connection screws on the output flange and the casing are contained in Tab. 8.9.c.

Tab. 8.9.c: Allowable torque transmitted through connecting screws

Type	Output flange			Case		
	Number x screw	Pitch diameter [mm]	Transmitted torque [Nm]	Number x screw	Pitch diameter [mm]	Transmitted torque [Nm]
050	10xM4	28	100	4xM5	63	165
070	14xM4	42	233	16xM3	64	238
085	12xM5	50	470	18xM3	81	400
095	18xM4	53	450	18xM4	88	760
110	14xM6	69	898	12xM5	100	792
115	18xM5	68	173	18xM4	108	173
125	18xM6	71	1 190	18xM5	116	1 380
140	14xM6	92	2 090	12xM6	140	1 562
	8xM6	74				
155	18xM8	96	2 950	28xM5	146	2 700
155 H*	18xM6	100	1 600	28xM5	146	2 700
170 H*	18xM8	110	3 380	12xM8	175	3 580

*) Hollow shaft actuators.

Certificates

Courtesy of Steven Engineering, Inc - (800) 258-9200 - sales@steveneng.com - www.stevenengineering.com

8.10 FAQ

Feedback encoders:

01. Q: Is it possible to implement feedback encoder which is not within the standard range or even to implement my own feedback encoder??
    A: Yes, we can implement any type of feedback encoder if there is no hardware or mounting limit. In specific cases we can make custom solution for you and implement your feedback encoder.
02. Q: How can I implement safety function with feedback encoders?
    A: We can use single Functional Safety encoder or 2 independent encoders to provide full safety function for your application.
03. Q: How is it possible to make more precise control of drive?
    A: There are 2 ways how to do it. Fither use the feedback encoder with better resolution or use it on the output flange of reduction gear.

Servomotors:

01. Q: What kind of servomotors do you use?
    A: We use Permanent Magnet Synchronous Motors (PMSM).
02. Q: Can I choose DC BUS voltage which is not within your standard range?
    A: Our standard DC BUS voltage is 24 V, 320 V and 560 V but we can implement servomotor with your requested DC BUS voltage after check by our engineers.
03. Q: How can I control servomotor without standard feedback encoder?
    A: We can provide you with a solution with hall sensors inside the servomotor for application with low resolution requirements.
04. Q: Is it possible to use different torque or speed of used servomotors in the standard DriveSpin® series?
    A: If our standard DriveSpin® series doesn't fit your requirements, we can implement different servomotor or design new the one based on your requirements.

Ingress Protection (IP):

01. Q: How can I improve protection of standard DriveSpin®?
    A: Ingress Protection of our standard product range is IP 64. If your application requires higher IP, we can design all components of DriveSpin® actuators to reach IP 65, 66 or even 67.

DriveSpin® mechanical design:

01. Q: Is it possible to prepare a special design of actuator housing?
    A: If housing of standard DriveSpin® series is not suitable for you, we can prepare any special design of actuator housing where you can define the shape of housing, mounting elements or fixation points which are required for your project.
02. Q: Can I make actuator from any TwinSpin® Reduction gear?
    A: Yes, if you choose TwinSpin® reduction gear and define other electro-mechanical parameters, we can prepare a complete solution for you.
03. Q: Do I need to develop a completely new product if I have some specific requirement?
    A: In many cases it is not necessary to develop a completely new product, just change the existing mechanical or electrical part of the actuator based on your quirement.

Electrical connection:

01. Q: Is it possible to use different connectors for standard DriveSpin® series?
    A: Yes, we can implement your special connector for applications where if required.
02. Q: Can I use a single connector instead of 2?
    A: For some application it is possible. We have Hybrid connectors in our product range or we can use any other connector which will fit your technical requirements, for example maximal current for power pins or avaliable quantity of signal pins for used feedback encoder.

Brakes:

01. Q: Can I use a brake in actuator?
    A: Yes, we can implement standard 24 V electromagnetic brake for static applications where the brake holds the load in the absence of power.
02. Q: Is it also possible to use the brake for dynamic applications?
    A: Yes it is possible, but in this case calculation of the brake parameters is different than in static application brake and it should to be consulted with the manufacturer.
03. Q: What other modifications are avaliable for the brakes?
    A: We can implement the brakes with different voltage, hand release and other special modifications.

Accessories:

01. Q: Do you have any accessories available for the actuators?
    A: We have cables between the servo drive and actuator with standard used connectors and length up to 99.9 meters.

Courtesy of Steven Engineering, Inc - (800) 258-9200 - sales@steveneng.com - www.stevenengineering.com

9. YourSpin - General information

YS SERIES

CUSTOMIZED / SPECIAL SOLUTIONS

Customer requirements often call for special solutions. Thanks to many years of experience in technical support and engineering, we have implemented highly professional solutions according to customer requirements. We make various design modifications of standard products and solutions of higher assembled units TwinSpin® series G, T, E, H and M, DriveSpin® in series DS, DSH, DSM, DSF and RotoSpin modules. Our technical support is based on professional recommendations for various applications of TwinSpin®, DriveSpin® and RotoSpin in industrial segments such as robotics, automation, metalworking, medicine, camera systems, security and others. The advantages of these special solutions are their compact and modular design, easy connection to the supporting structure and technically applied sealing elements

Advantages

- **compact design**
- **modular design**
- **easy connection with the support structure**
- **technically applied sealing elements**

Courtesy of Steven Engineering, Inc - (800) 258-9200 - sales@steveneng.com - www.stevenengineering.com

9.1 Customized / Special reduction gears

TwinSpin® **reduction gear with right angle gearbox**

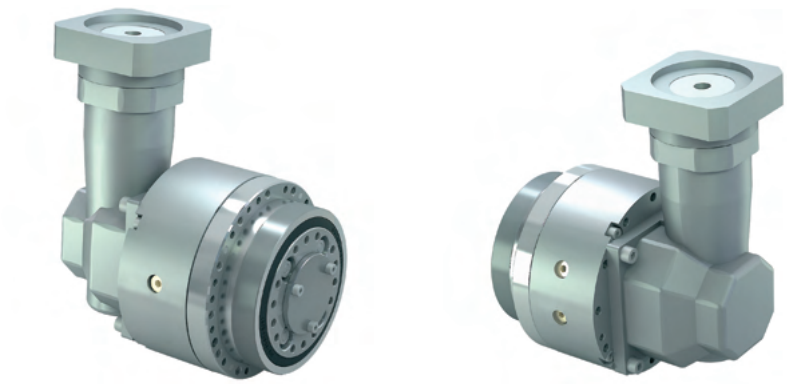

Advantages

- **possibility of right-angle motor connection**
- **higher input speeds**
- **smaller servomotor dimensions**
- **low lost motion and hysteresis on output**
- **compact solution**

High precision reduction gear with the possibility of right-angle motor connection also allows the total reduction ratio increase by using an input right-angle reduction gear. This allows the use of servomotor with lower torque and higher speed, i.e. a smaller motor. This solution is available for the whole line of E series reduction gears.

Note: For more information please contact the SPINEA® sales department.

TwinSpin® **hollow shaft reduction gear with a pre-stage**

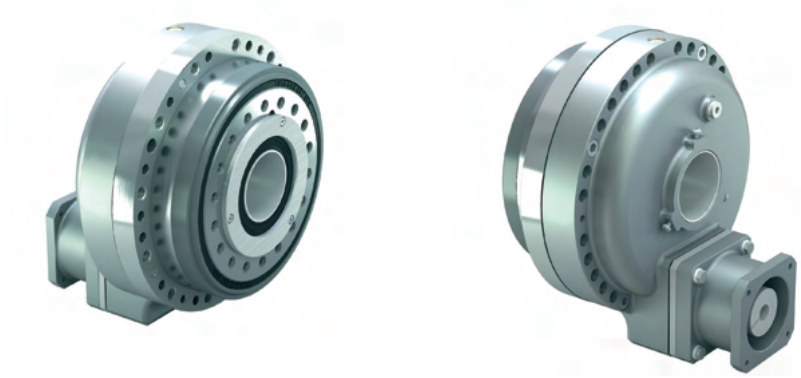

Advantages

- **high-precision reduction gear**
- **possibility to have a motor in an offset position**
- **high reduction ratio in two stages**
- **coupling and motor flange provide easy motor mounting**
- **pre-greased and fully sealed solution**

A TwinSpin® hollow shaft reduction gear with a pre-stage and offset motor position - a solution for applications that require completely sealed node with a large through hole for passing cables, tubing or additional shafts.

Note: For more information please contact the SPINEA® sales department.

Courtesy of Steven Engineering, Inc - (800) 258-9200 - sales@steveneng.com - www.stevenengineering.com

9.2 Customized / Special solutions

RotoSpin **- High precision rotary modules**

The rotary positioning module, which is offered under the RotoSpin brand, is designed for the building of positioning devices and rotary tables used at automated and robotized workplaces. The RotoSpin module features a high reduction ratio, high kinematic precision, low backlash motion, high torque capacity, low weight, and a compact design.

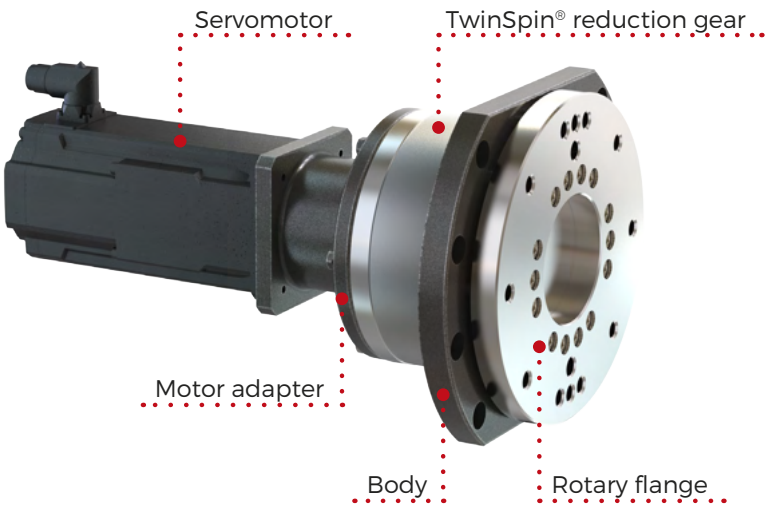

RotoSpin **- Rotary modules - series A**

Advantages

- **possibility to be built into circular holes**
- **low weigh and small dimensions**
- **wide area of use**
- **easy attachment**

The RotoSpin A are called the flange ones. They feature a flange design, which allows the module's attachment and building into a structure with a circular hole. According to their size, RotoSpins A are manufactured in four size categories with load capacities of 60, 250, 500, and 1 000 kg respectively. Due to their small dimensions and low weight, the RS-A modules are used mainly in moving parts of positioning devices. If the RS modules are loaded with higher than allowed moment or shock load, we use them in combination with a support bearing.

Note: For more information please contact the SPINEA® sales department.

Courtesy of Steven Engineering, Inc - (800) 258-9200 - sales@steveneng.com - www.stevenengineering.com

RotoSpin - **Rotary modules - series B**

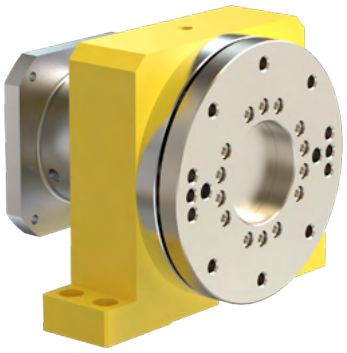

Advantages

- **possibility to be attached to flat surfaces**
- **compact design**
- **wide area of use**
- **easy attachment**

The RotoSpin B are called the box ones. They feature a box design, which allows the module easy attachment to a flat surface by means of feet. According to their size, RotoSpins B are manufactured in four size categories with load capacities of 60, 250, 500, and 1 000 kg respectively. We supply the RS 1000 module in two versions according to the foot width. The B version with narrow feet is used where it is necessary to support a long workpiece or welded piece by means of a support module. The module with wide feet is marked as RS 1000-BX and it is used for clamping of short workpieces without support modules.

Note: For more information please contact the SPINEA® sales department.

Courtesy of Steven Engineering, Inc - (800) 258-9200 - sales@steveneng.com - www.stevenengineering.com

9.3 Customized / Special actuators

DriveSpin® **actuators - design "Your actuators"**

The rotary electric actuator can be designed and manufactured according to your specific application requirements. Technical specification of the input and output can be designed and optimized for you

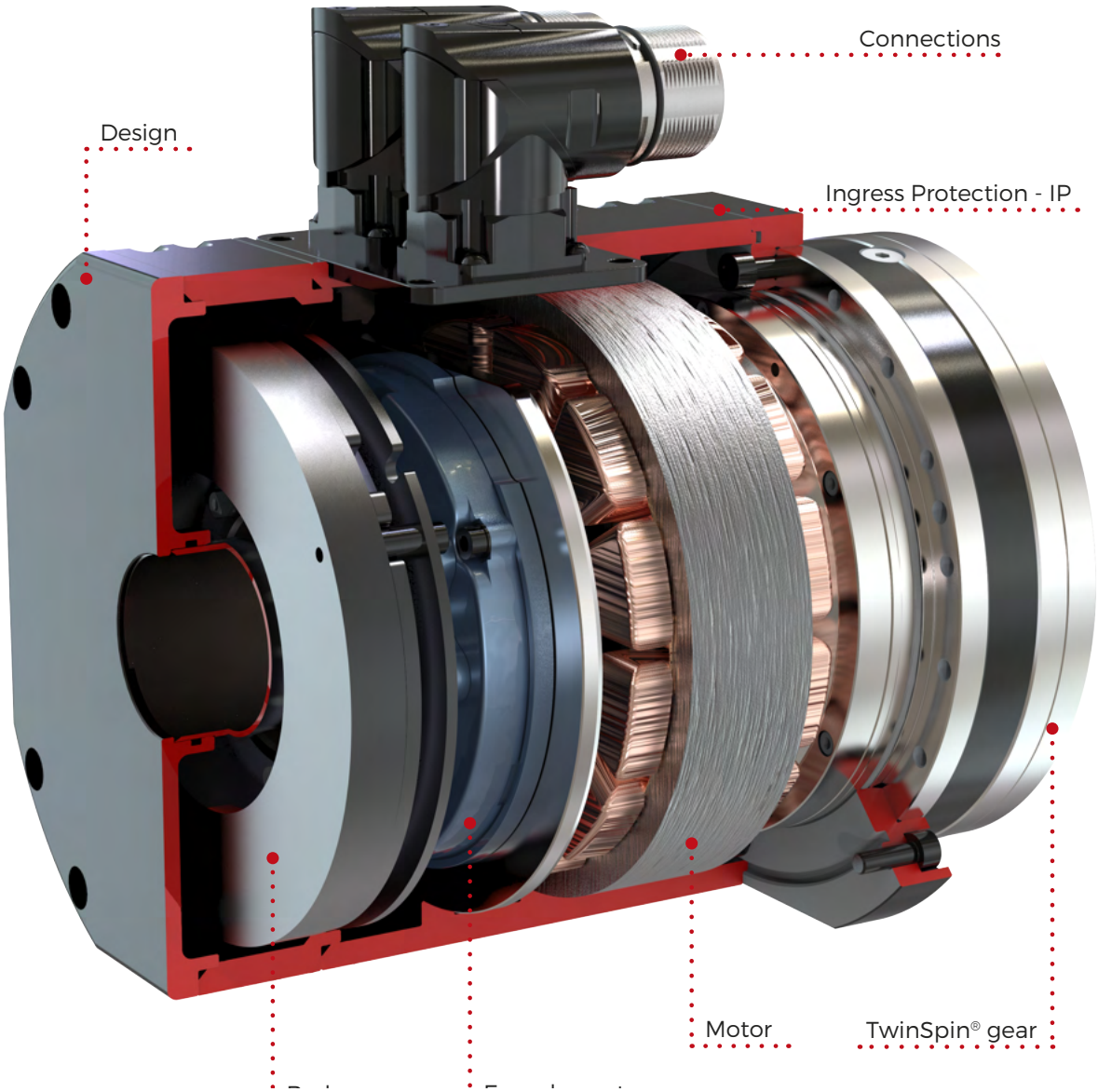

Advantages

- **create your own design**
- **integrate unique mechatronics components (Servomotor, Encoder)**
- **make your own color design**
- **optimize input and output characteristics of the actuator according to your application**

Courtesy of Steven Engineering, Inc - (800) 258-9200 - sales@steveneng.com - www.stevenengineering.com

Motor
Motors are directly built-in the DriveSpin®, without any need for an additional coupling. This helps to reduce weight and dimensions of the whole solution. Main type of the motor is a synchronous motor with permanent magnets. 24V, 320V and 560V are standard versions of the motor built-in the DriveSpin®. Low voltage range can be modified to 36V 48V and 60V, and the high voltage range to 680V. These motors are a custom solution and they are modified to suit our customers. If there is a special requirement or our solution is not suitable for you we can implement any frameless motor and calculate final parameters of DriveSpin®.

Encoder systems
DriveSpin® actuators with cycloidal gearbox excel in terms of precision positioning however this would not be possible without the implementation of position feedback sensors. Our primary industries such as robotics, machine tool, dental machines, CNCS require different accuracy standards. Thus, requirements for motion control differ on application. Therefore, our company consults your needs and requirements. Our specialists will analyze your application and find the best solution in terms of accuracy, precision measurement, robustness as well as compatibility with your control system. Actuator series DS, DSH, DSM as well as DSF come with a wide variety of feedback systems. Our portfolio includes sensors from basic feedback systems used in most servo drives such as incremental encoders, up to next generation protocol encoders such as (EnDat 2.2, Hiperface DSL, BiSS-C). Technical parameters, e.g. like resolution, sensor protocol, single vs. multiturn are specified in the custom product development process. Supported encoder systems: HIPERFACE®, HIPERFACE® DSL, EnDat 2.2, Resolver, BiSS Interface, DRIVE-CLiQ, FANUC.

Brake
Brakes in our actuators are mostly used in static applications which statically hold the load in the absence of power. Usually electromagnetic brake is used, where the armature becomes engaged with brake disk in currentless state (without connected DC voltage) and magnetic field is neutralized and brake released to free rotation of actuator after the application of DC voltage to brake. Electromagnetic brakes are also used in dynamic applications where actuator use the brake for deceleration or as a safety brake, but this application requires different calculation and incorporation in the actuator. 24 VDC electromagnetic brake for static applications is a standard in our product range, but we can build in also 12 VDC electromagnetic brakes with handle release or any other brakes developed for servomotors.

Connections
Electrical as well as mechanical connections used for standard DS, DSH, DSM and DSF are available in this catalogue. However, our electrical and mechanical engineering team can adjust most of the connection possibilities according to the end customer requirements.

Design
Every piece of DriveSpin® series, either DS, DSM, DSH or DSF, has its own unique design. If you require specific design of the housing or mounting flange, or if you need to adjust design to your own application, our specialists are ready to prepare a solution according to your demands. It is also possible to place a special ID plate (e.g. QR code) to meet your production processes. Of course, the use of your specific coloring is also possible.

Ingress Protection - IP
Ingress Protection of our standard product range is IP 64. If your application requires higher IP, we can design all components of DriveSpin® actuators to reach IP 65, 66 or even 67.

Testing
All our products from the DS, DSH, DSM and DSF series are subjected to testing, they are standardly tested and comply with the European standards, CE. Our company dispose with various test benches, which can be used for simulation of various duty cycles according to the customer specification. We are able to provide for you independent testing of our products according to your requirements and our capabilities.

Note: For more information please contact the SPINEA® sales department.

Courtesy of Steven Engineering, Inc - (800) 258-9200 - sales@steveneng.com - www.stevenengineering.com

10. General information

10.1 Maintenance

The reduction gear does not require any special maintenance. During its installation please observe the respective dimensional and positional tolerances of the centering diameters (Chapter 5.3). The reduction gear is a high-precision product, therefore it requires careful handling, installation, and dismounting.
Any tampering with the reduction gear (disassembly, assembly) constitutes immediate loss of warranty. If a reduction gear fails due to a fault in its manufacturing or a material defect, please inform the manufacturer, who will carry out professional repair or replacement.

10.2 Delivery conditions

The reduction gear is delivered completely assembled, without fixing screws, filled with grease, and in a protective package. Not all series are fully sealed as a standard. Each reduction gear is identified with a type label, containing the following data:

- manufacturer
- product type and size
- reduction ratio
- model
- serial number

10.3 Transport and storage

The reduction gears should be transported in enclosed transport vehicles, in containers secured against movement or overturning. The mode of transport should follow mutual agreement between the customer and the supplier. In addition, the product must be protected against the elements, aggressive vapors, dust, and mechanical damage. The manufacturer storing TwinSpin® reduction gears in the original transport package.
Standard packaging in the original package ensures corrosion protection for the period of 6 months during storage in enclosed rooms with ambient temperature within 5°C – 25°C and relative humidity up to 60%. After 6 months it is necessary to preserve the reduction gear again.

10.4 Warranty

The warranty is specified in the General Delivery Terms of SPINEA, s.r.o.. For more information visit our website: www.spinea.com

10.5 Final statement

Any design changes, modifications and improvements, aimed at increasing the technological level of the reduction gear, which, however, do not change the main technical parameters, installation and connection dimensions, may be performed by the manufacturer without prior consent from the customer. Any design changes and/or modifications affecting the critical properties and parameters of the reduction gear are subject to an approval procedure.

10.6 Cautions concerning the application of the TwinSpin® high precision reduction gear

If the end user of the product works in the military field or if the product is to be used for manufacturing of weapons, the product may be subject to trade controls and export regulations. Therefore please check the export and trade control terms and conditions before exporting of the product and take the required actions.

- If a fault or a malfunction of the product may directly endanger human life or if the product is used in devices that may cause damage to human health (nuclear, space, healthcare facilities, various security systems, etc.), regular checks are essential. In such case please contact our sales agent or our nearest business office.

- Although this product has been manufactured under strict quality control, if it is intended for the use in machines that, in the event of malfunction, may seriously endanger human life or damage equipment, it is essential to adopt appropriate safety measures.

- If this product is intended for the use in a special environment (clean rooms, food industry, etc.), please contact our sales agent or our nearest business office.

For more information contact our sales department, or visit our website: www.spinea.com

Courtesy of Steven Engineering, Inc - (800) 258-9200 - sales@steveneng.com - www.stevenengineering.com

SPINEA BY TIMKEN
Courtesy of Steven Engineering, Inc - (800) 258-9200 - sales@steveneng.com - www.stevenengineering.com

Courtesy of Steven Engineering, Inc - (800) 258-9200 - sales@steveneng.com - www.stevenengineering.com

SPINEA, s.r.o.
Ku Magašu 702/3
080 01 Haniska, District of Prešov
Slovakia, EU

Tel: +421 51 770 01 56
E-mail: info@spinea.com
Web: www.spinea.com

Cone Drive
240 E. 12th Street
Traverse City, Michigan, USA, 49684

Tel: 1-888-994-2663 or +1-231-946-8410
Fax: 1-888-907-2663
Customer Service: orders@conedrive.com
Application Engineering: ae@conedrive.com
Inside Sales: jbreakey@conedrive.com
www.conedrive.com

Courtesy of Steven Engineering, Inc - (800) 258-9200 - sales@steveneng.com - www.stevenengineering.com